Interface Control Document
MCCS to Science Instrument
Software Interface (Functional)
MCCS_SI_04

SOF-DA-ICD-SE03-052

Early Science

Date: May 2, 2011
Revision: C

DFRC
Dryden Flight Research Center
Edwards, CA 93523

ARC
Ames Research Center
Moffett Field, CA 94035

German Space Agency, DLR
Deutsches Zentrum für Luft
und Raumfahrt

Early Science Interface Control Document
MCCS to Science Instrument Software Interface (Functional)
MCCS_SI_04

PREPARED BY:

ARC / Steve Culp / Science Project Software Engineer — Date 5/2/11

CONCURRENCE:

ARC / Gelsomina Cappuccio / Science Project Manager — Date 5/2/11

DFRC / Brent Cobleigh / Airborne Platform Project Manager — Date 5/3/11

DFRC / Stephen Jensen / Program Chief Engineer — Date 5/3/11

FOR

ARC / Scott Horner / Science Project Science Instrument Manager — Date 2 MAY 2011

ARC / Daniel Kozarsky / Science Project SE&I Lead — Date 5/2/11

DFRC / Ting Tseng / Platform Project Chief Engineer — Date

APPROVAL:

DFRC / Robert Meyer / SOFIA Program Manager — Date 5/3/11

DLR / Alois Himmes / SOFIA DLR Program Manager — Date

VERIFY THAT THIS IS THE CORRECT VERSION BEFORE USE

Early Science Interface Control Document
MCCS to Science Instrument Software Interface (Functional)
MCCS_SI_04

PREPARED BY:

ARC / Steve Culp / Science Project Software Engineer — Date

CONCURRENCE:

ARC / Gelsomina Cappuccio / Science Project Manager — Date

DFRC / Brent Cobleigh / Airborne Platform Project Manager — Date 5/2/11

DFRC / Stephen Jensen / Program Chief Engineer — Date 5/2/11

ARC / Scott Horner / Science Project Science Instrument Manager — Date

ARC / Daniel Kozarsky / Science Project SE&I Lead — Date

DFRC / Ting Tseng / Platform Project Chief Engineer — Date 5/3/2011

APPROVAL:

DFRC / Robert Meyer / SOFIA Program Manager — Date 5/3/11

DLR / Alois Himmes / SOFIA DLR Program Manager — Date 05/09/11

REVISIONS

VERIFY THAT THIS IS THE CORRECT VERSION BEFORE USE

REVISIONS

REV	DATE	DESCRIPTION	APPROVAL
Rev. A	5-6-04	L3 release (doc # 96145640-000, rev A). Incorporated miscellaneous changes. Completely replaced Appendix A and B.	N/A
Rev. B	9-21-10	Adapted for Early Science from 5/6/04 L3 version (doc # 96145640-000, rev A). Switched to current SOFIA document conventions. Major update to entire document. Details not available for Early Science are grayed out.	
Rev. C	5-2-11	Updated for Short Science 2 build. Specifically: 1) Rebuilt appendices A and B based on SS2 XML files (version 3.3.0). 2) Removed debug/diagnostic commands that should only be used by MCCS developers. 3) Removed instrument-specific SI command and data descriptions from appendices A and B. (These are input files to MCCS from SI teams and operations, not ICD specifications.) 4) Corrected typos and updated sample commands and responses in front matter to SS2 commands and data. 5) Showed EcRF and GalRF as available reference frames in Table 17 since L-3 indicates these are currently supported. 6) Removed references to x_bin & y_bin since these are not used by any SI teams (per L-3 and USRA review comments). 7) Added explanation of NeedDate field to front of appendix A. 8) Added KOSMA reference to sections 1-2. 9) Changed IMAGSN to IMAGE_SN in section 2.2 of Appendix C (per L-3 review comment). 10) Added Appendix E (Errata).	PMB

Table of Contents

PARAGRAPH TITLE PAGE

1. SCOPE 1

1.1 PURPOSE 1
1.2 MISSION CONTROL AND COMMUNICATION SYSTEM DESCRIPTION 2
1.3 SCIENCE INSTRUMENT SYSTEM DESCRIPTION 3

2. APPLICABLE DOCUMENTS 4

2.1 SOFIA DOCUMENTS 4
2.2 REFERENCES 4

3. INTERFACE DESCRIPTION 5

3.1 SOFIA COMMAND LANGUAGE NETWORK CONNECTION PROTOCOL 5
3.2 ROLES 6
3.3 COMMUNICATION AND DATA EXCHANGE 6
3.3.1 SOFIA Command Language Protocol 6
3.3.2 SI Data Interface (data-definition XML files) 16

4. SOFIA COMMAND LANGUAGE DESCRIPTION 27

4.1 INTERFACE REQUIREMENTS 27
4.2 COMMANDS ADDRESSED TO AN SI OR SUBSYSTEM 27
4.3 COMMANDS ADDRESSED TO MCCS 27
4.3.1 Command and Data Context 27
4.3.2 Argument Lists and Modifiers 28
4.3.3 Aliases 32
4.3.4 Inlining 32
4.3.5 Values and Escape Sequences 33
4.4 SUBSCRIBING TO HOUSEKEEPING (HK) DATA 33
4.4.1 Non Housekeeping Gets 35
4.5 ALERTS AND ALARMS 35
4.5.1 Subscription to Alerts/Alarms 35
4.5.2 Alert/Alarm Format 36
4.5.3 Confirming Alarms 38
4.5.4 Confirmed Alarm Responses 38
4.5.5 Disabling Alerts/Alarms 39
4.5.6 Disabled Alert/Alarm Responses 39
4.5.7 Enabling Alerts/Alarms 40
4.5.8 Enabled Alert/Alarm Responses 41
4.6 MCCS RESPONSIBILITIES 41
4.7 COORDINATE SYSTEMS 41
4.8 DATA REQUIREMENTS 42

5. DEFINITIONS, ABBREVIATIONS, ACRONYMS 44

APPENDIX A. SCL COMMANDS A-1

APPENDIX B. HOUSEKEEPING DATA B-1

APPENDIX C. TA IMAGE PROCESSING SUBSYSTEM C-1

APPENDIX D. MISSION AUDIO DISTRIBUTION SUBSYSTEM D-1

APPENDIX E. ERRATA E-1

List of Figures

Figure **Title** **Page**
Figure 1. Scope of Early Science MCCS_SI_04 1
Figure 2. MCCS in Early Science 3
Figure 3. (X, Y, Z) SI Mounting Flange Reference Frame (SIMFRF) 17
Figure 4. SI (V, W) and SIMF (X, Y) Reference Frames 18

List of Tables

Table **Title** **Page**
Table 1. Session Roles 6
Table 2. Syntax Notation 8
Table 3. ASCII SCL Command Syntax 8
Table 4. ASCII SCL Command Responses 9
Table 5. Binary SCL Command Responses 13
Table 6. Binary Data Properties 14
Table 7. Common MCCS Units and Abbreviations 29
Table 8. Escape Sequences 33
Table 9. Alert/Alarm Subscribe Command Keywords 36
Table 10. Alert/Alarm Response Tokens 37
Table 11. Alarm Confirm Command Keywords 38
Table 12. Confirm Command Responses 39
Table 13. Disabling Alert/Alarm Keywords 39
Table 14. ASCII SCL Disable Command Responses 40
Table 15. Enabling Alert/Alarm Keywords 40
Table 16. ASCII SCL Enable Command Responses 41
Table 17. Supported Reference Frames 42
Table 18. Default SCL Data Formats 42

1. SCOPE

1.1 Purpose

This document defines the early science functional interface between the Science Instrument (SI) and the Mission Command and Control System (MCCS).

Throughout this document items identified in *gray italic text* are not available in early science but are planned for later SOFIA phases.

In addition to its use for SI interaction with MCCS, the interface described in this document has been adopted by observatory systems internal and external to MCCS for command and communication. Those subsystems include: *Data Acquisition Subsystem (DAS)* (Note: Surrogate DAS will be available for Early Science), Video Distribution Subsystem, Mission Workstation (WS) and Displays Subsystem, *Archive Subsystem*, Mission Audio Distribution Subsystem (MADS), Power Distribution Subsystem (PDS), *Water Vapor Monitor (WVM)*, and Cavity Environmental Control System (CECS).

The scope of this interface with the SI in early science is depicted by Figure 1.

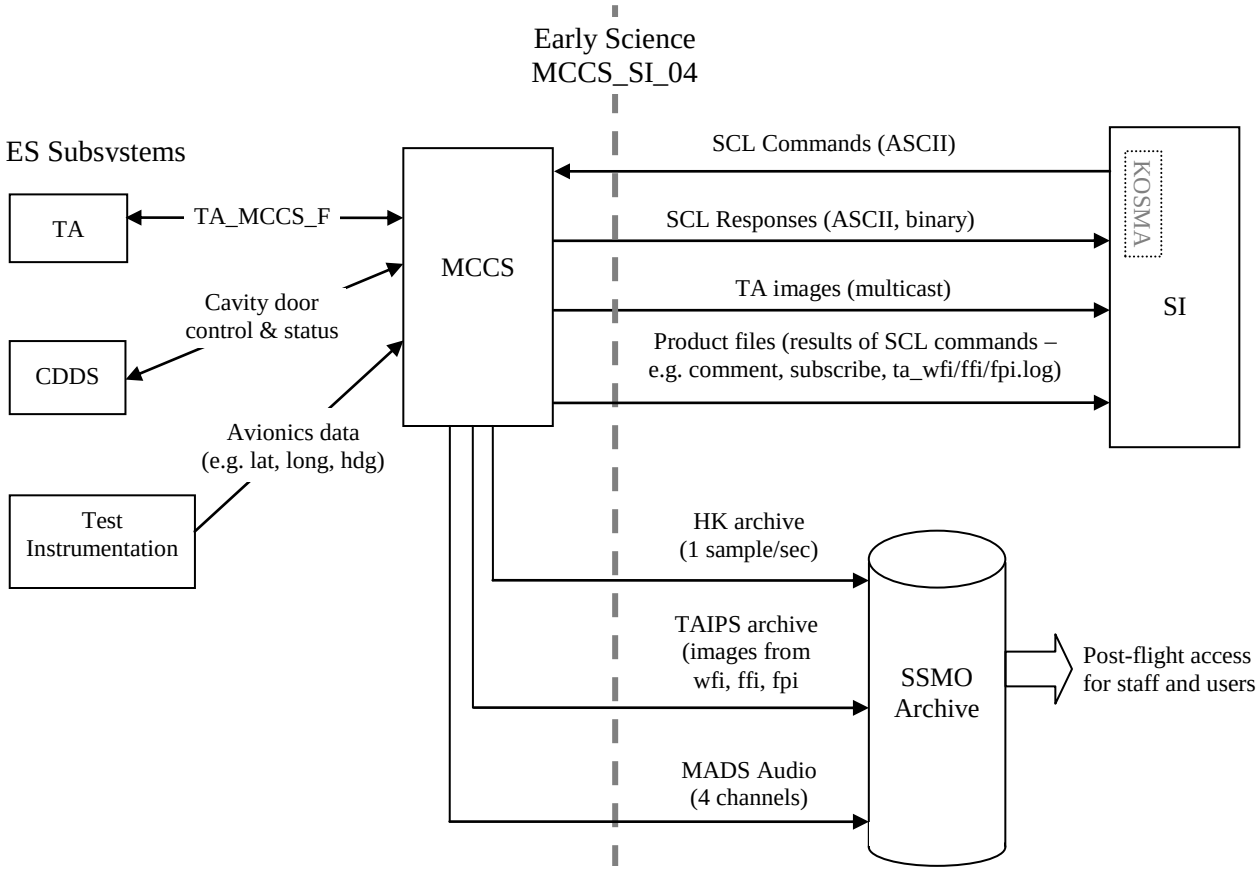

Figure 1. Scope of Early Science MCCS_SI_04

The arrows between MCCS and the SI represent interfaces that are available on the aircraft and in simulators of the aircraft systems. The arrows into the SSMO Archive represent data products available to SI teams and SOFIA staff post-flight. The vertical dashed line demarks the scope of the functional interface between MCCS and SI for early science.

The dashed box inside the SI represents an optional software package that allows a Science Instrument which prefers the Kölner Observatorium für SubMillimeter Astronomie (KOSMA) interface to use that interface to interact with MCCS. For further information on the KOSMA interface refer to KOSMA Translator to SI Interface ICD (SCI-AR-ICD-SE03-2034).

Product files which result from SCL commands such as the subscribe, comment, or ta_wfi/ffi/fpi.log commands are written to subdirectories under /modstor/mission_data on an NFS-mountable MCCS disk drive.

1.2 Mission Control and Communication System Description

MCCS provides mission communication, power distribution, data acquisition, data archival, network services and the observatory crew interface. Without MCCS, the observatory would fail to function as an integrated unit. A functional diagram of the early science MCCS can be found in Figure 2 below.

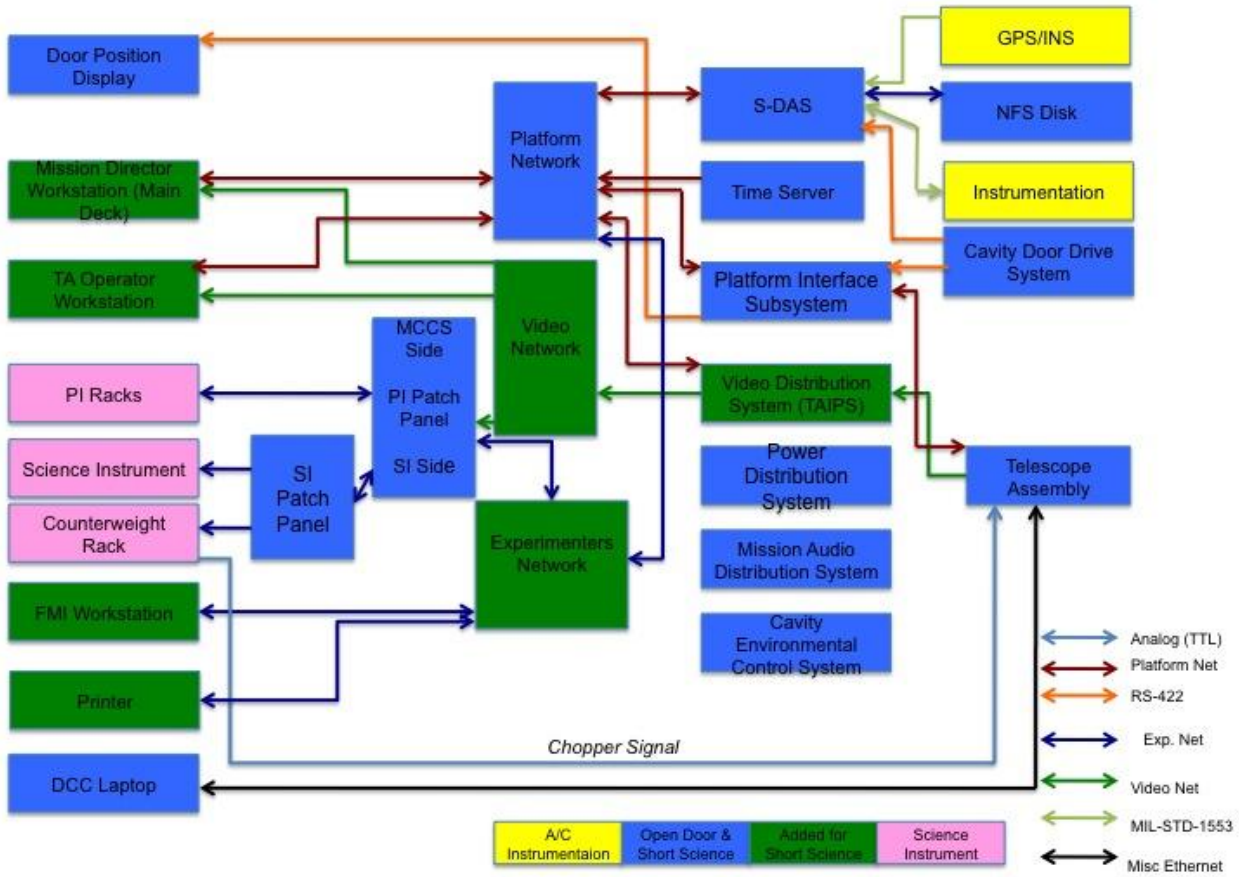

Figure 2. MCCS in Early Science

1.3 Science Instrument System Description

For the purposes of this document, the SI system is considered to be one or more computer systems coupled to the science instrument detection devices and electronics controlled by the scientists using GUI interfaces, scripts, other computational command entry, and mechanical/electronic controls.

The functional interface between the SI and the MCCS may be over one or multiple physical network connections. Science instrument equipment may be at any assigned node (IP address) on the general-purpose network and will not interface directly with the MCCS software unless it negotiates a session per the interface description in this document. However, all the generally available utilities on the network (e.g., printing) will be available to SI computers anywhere on the network.

2. APPLICABLE DOCUMENTS

2.1 SOFIA Documents

APP-DF-ICD-SE03-2011	ICD MCCS Network
APP-DF-ICD-SE03-2024	ICD NTP/IRIG_MCCS, (Network Time Protocol) Time Server and the IRIG-B Distribution
APP-DF-ICD-SE03-209	*ICD WVM_MCCS_F, Water Vapor Monitor (WVM) to MCCS Functional*
PD-2003	Interface Reference Document
SE03-053	ICD CDDS_MCCS, RS-422 Messages (SD00034)
SOF-1030	SOFIA Systems Interface Requirements Specification
SOF-AR-ICD-SE03-2029	ICD MCCS_SI_05, Principal Investigator Patch Panel to Principal Investigator Equipment Rack(s)
SCI-AR-ICD-SE03-2034	ICD SI_KOSMA Translator_01,KOSMA Translator to SI Interface
SOF-DF-ICD-SE03-047	ICD TA_MCCS_F, TA to MCCS Functional
SOF-L3-ICD-SE03-048	ICD TA_MCCS_P TA to MCCS Physical
USRA-DAL-SSMOC-INFO-MAN-2303	Integrated SOFIA Command Language User Manual

2.2 References

ASCII	X3.4-1977, American Standard Code for Information Interchange
Ethernet	IEEE 802.3
IP	Internet Protocol, RFC 791 (1981)
TCP	Transmission Control Protocol, RFC 793 (1983), MIL-STD-1778 (1983)

3. INTERFACE DESCRIPTION

The SI to MCCS physical interface is defined in MCCS_SI_05 ICD.

The MCCS provides a TCP/IP Ethernet network for SI computers to intercommunicate and to communicate with MCCS computers (see Experimenter's Network in Figure 2). Standard network services such as ftp, telnet, http client and server, X Windows client and server, and secure variants of these are permitted traffic on MCCS networks.

The MCCS provides the following to the SI:

(a) Color Printing

(b) Network Time Protocol (NTP) to allow SI computers to synchronize to observatory time.

(c) IRIG-B time code interface (see MCCS_SI_05 ICD).

(d) TA images, multicast in near real-time (see Appendix C).

(e) TA image archive (see Appendix C).

(f) MCCS Housekeeping data archive (see Appendix A)..

(g) Mission audio recording archive (see Appendix D).

(h) SI monitoring and control of observatory systems via the SOFIA Command Language (SCL).

The SCL interface is the primary subject of the balance of this ICD.

3.1 SOFIA Command Language Network Connection Protocol

In order to carry on an SCL session, either one bidirectional socket or a combination of a "write-only" and a "read-only" socket must exist between MCCS and an external system. Thus, in order for an SCL session to be started, one of the following must occur:

(a) External system calls for a single "bidirectional" socket: The external system connects via TCP/IP to a well-known MCCS IP address and port (port # 6555). When the external system issues a normal login command, the MCCS will return responses over the same TCP/IP connection. Thus, the single TCP/IP socket is used for bidirectional communication.

(b) External system calls for two "one-way" sockets: The external system connects via TCP/IP to the well-known MCCS IP address and port (as defined above). The external system then issues a login command which includes the "port" keyword to tell MCCS which port on the originating external system to connect to for all output from MCCS. MCCS then connects to the indicated port and sends the response to the login command. Note that both sockets are in fact capable of bi-directional communication, but that by convention the communications only occur in one direction on each socket.

While the simpler single-socket connection protocol ((a) above) is likely to be adequate for most uses, the two-socket connection is provided for users who prefer it, for

performance or other reasons. (It is believed that some computers only provide half-duplex operation on a single socket and would therefore be more efficient with separate input and output sockets.)

If MCCS detects a lost socket connection, MCCS closes all sockets related to that connection and terminates any active SCL commands which originated from that connection. If the external system initiated the connection ((a) or (b) above), the external system is responsible for establishing a new connection to MCCS if/when it so chooses.

3.2 Roles

Each user will have an assigned name and role that must be supplied when "logging in" (i.e., initiating an SCL session). Command access will be restricted according to this role. Table 1 lists the currently supported user roles for the MCCS.

Table 1. Session Roles

Name of Role	Description of Role
ifd	In-Flight Director (AKA Mission Director) session
co	Computer Operator session
to	Telescope Operator session
instrument	Instrument Computer session
pi	SI Team sessions
gi	General Investigator sessions
facil	EPO Facilitator sessions
epo	EPO class/guest sessions
visitor	VIP visitor session
fp	Flight Planner session
wvm_system	Water Vapor Monitor interface session
asi_system	ASI system interface session
cdds_tester	Cavity Door Drive System tester session

3.3 Communication and Data Exchange

There are two mechanisms for communication and data exchange between MCCS and the SI system, the SOFIA Command Language (SCL) and data-definition XML files. SCL allows scientists and other Observatory personnel to control the science experiment and to access other MCCS software functions, controls, and services from onboard PI computers and Observatory workstations. Commands are entered by activating previously composed scripts (XML files) and through command-line interfaces and GUI selections. These SCL commands are passed to MCCS where validation and translation into the appropriate direct commands to the TA, CDDS, SI or other subsystems occur.

3.3.1 SOFIA Command Language Protocol

This section describes the SCL command and response protocol. The primary mechanism for communication between a subsystem and the MCCS is SCL commands and

responses. SCL commands are ASCII and are case insensitive – the MCCS converts all commands and keywords to lower case before interpreting them.

Note however that string values which are quoted are case sensitive. For example, *`name="FooBar"`* within a command would treat the value of name as *FooBar*, whereas the same command with *`name=FooBar`* (i.e. without quotes) would treat the value of name as *foobar*.

By default, SCL responses are in ASCII format - however, a binary SCL response format is also available.

All SCL commands begin with a user designated message ID, which is a positive 32-bit integer value. This ID will be included on all responses to the command so that the user knows which responses are associated with which command (since the user may have multiple commands running at the same time). For this reason, it is recommended that the user specify a different ID with each command they issue, since otherwise it may become difficult to know which responses are associated with a specific command. Of course, a user may re-use a previously specified ID if the command associated with that ID has completed. Also, two different users may issue commands with the same ID without any problems since each user session has its own command environment (i.e., user sessions do not share commands – each session has its own set of commands that execute independently from commands issued by other user sessions). This means that all command responses sent to a particular user session will be associated with a command issued by that session (however, a user may subscribe to housekeeping data to see command responses sent to other user sessions – see the SCL User Manual for more details).

SCL command responses take one of three formats:

1) BINARY (pure binary): binary header + binary data;
2) LEGACY (pure ASCII): no header, new line indicates end of message; and
3) FORMATTED (formatted ASCII): no header, new lines may be embedded, will be terminated by a new line.

The default type is LEGACY. Telnet users can use any one of the three. To override the LEGACY format, a user can do one of the following:

1) In the user's XML file, set the default format (attribute resp_format) to BINARY or FORMATTED.
2) Override the default set in the user's XML file by specifying the format at the end of a command: "`resp_format=LEGACY|BINARY|FORMATTED`". (Applies only to that command.)
3) Issue a set command to change the format so that all commands issued after that point receive responses in the specified format:
   "`set resp_format=LEGACY|BINARY|FORMATTED`".

3.3.1.1 ASCII Commands

The notation used in describing the command syntax for the SOFIA Command Language is shown in Table 2.

Table 2. Syntax Notation

Symbol	Description
<>	Encloses a symbolic token.
{}	Encloses a token which may be repeated zero or more times.
[]	Encloses an optional token.

An SCL command takes the following form.

<msg id> <command> { <keyword> = <value> [({ <keyword> = <value> [({ <keyword> = <value> […] })] })] } <term>

The terms in the above (<msg id>, <command>, and <keyword>=<value>) are separated by white space. White space is any combination of spaces and/or tabs. For formatted output, white space also includes carriage returns and line feeds.

Any command may be aborted by issuing the "cancel" command.

<msg id> cancel cmdid=<msg id of command to cancel> <term>

The system will respond with a '#' response, which indicates the command was aborted.

Table 3. ASCII SCL Command Syntax

Token	Description
<msg id>	An arbitrary numeric field used to identify a specific instance of a command. This number could be incremented by 1 for each subsequent command and be used for easy tracking of the sequence of commands. The value must be a positive 32 bit integer (i.e. from 1 to 2147483647). When responses are sent for the command, this number is used for the response message ID (see the next two sections).
<command>	Unique command name, including routing if necessary (see 4.3.1)
<keyword>	A keyword defined for the given command.
=	Equal sign (required after every keyword)
<value>	A value of a type compatible with the keyword it is assigned to. Note that a value may also contain the following: […] Defines lists of values, such as list=[height width depth], or bounds an ordered set or array type value command parameter (e.g., ta_tsc.tsc_fd_pos_abs fd_des_pos_abs_quat=[0.0 0.0 0.0 1.0] for its quaternion position parameter). [[…][…]…] Defines nested lists/arrays which can be nested to any depth and for arbitrary lengths, which allows for objects like 3x3 matrices (e.g., Direction Cosine Matrices (DCM)).
( )	Parentheses delineate keyword-value pairs, in which the values represent attribute(s) of the value preceding the parentheses.
…	Indicates that the pattern "({<keyword>=<value>})" may be repeated indefinitely. Since parenthesized keyword-value pairs represent attributes, this expresses the idea that attributes may

Token	Description
	have attributes, which theoretically (though not practically) could go on ad infinitum.
<term>	A character indicating end of a command or response. The MCCS will return <LF> at the end of all responses. It will accept <CR>, <LF>, or any sequence of <CR> and <LF> characters for commands.

Examples:

```
101 coord.position name=foo(ra=23.76245 dec=43.22254
    centroid=aoi1 rof1=aoi2 rof2=aoi3 inertial=yes) <CR>
102 nod.define amplitude=200 pos_ang=51.2 coord_sys=erf
    track_pos_a=foo track_pos_b=foo <CR>
103 nod.goto pos=a <CR>
104 get list=[sibs.RA sibs.Dec] <CRLF>
105 nod.next <CRLF>
106 sma.chop frequency=5 start=no <LF>
107 comment text="ready to observe now" file=log1.txt <CRLF>
```

3.3.1.2 ASCII Responses (Legacy or Formatted)

The response to a command takes the following form (see Table 3 for <keyword>, =, <value>, ( ), and <term> definitions).

<msg id> <respType> [{<keyword>=<value> [({<keyword>=<value>})] }]<term>

Table 4. ASCII SCL Command Responses

Token	Description
<msgID>	The numeric ID submitted by the user with the command (see section 3.3.1.1, ASCII Commands).
<respType>	Single character describing the type of response **:** for a successful final response **E** for an error in one or more data values: One or more command arguments or attributes has failed a limit check, failed a units conversion, or does not match the expected representation, e.g., a number was expected, but the user supplied a name string. Command not processed (final response) **S** for a syntax error: The command either does not follow the syntax given in section 3.3.1.1, the command destination or command name is not valid or cannot be found, or a given argument or attribute name is not valid for the specified command name. Command not processed (final response) **F** for a fatal error: A command failed at the destination (final response) **#** for a command aborted by the user (final response) **A** for a command acknowledgement: Command has arrived at its internal MCCS destination and has passed all basic syntax and

	data checks. Note that the destination may need to perform more specific syntax or data checks on the command, so an E or S response (see above) may follow an A response (more msgs to come) **I** for an intermediate response (more msgs to come) **W** for a warning response (more msgs to come) **D** for programmer debug messages (more msgs to come) **N** for programmer warning messages (more msgs to come)

As with other syntax elements, the respType may be either upper or lower case, although MCCS will always generate upper case.

All commands that pass their basic syntax and data checks will return an 'A' response initially, indicating to the user that the command has reached its internal MCCS destination. After a given command has sent an 'A' response, any number of intermediate responses may follow, concluded by a final response (e.g., ':', 'E', 'S', 'F', or '#'). Commands that do not pass their basic syntax or data checks will return either an 'S' or 'E' final response. As is mentioned in the table above, an 'S' or 'E' response may also be returned after an 'A' response if the command fails any specific syntax or data checks performed at the destination. Specific syntax or data checks involve those things that only the destination knows about the command, e.g., if the given arguments make sense together (even though they may be syntactically valid) or how to perform units conversions for items with dynamic conversion factors (e.g., converting from pixels to millimeters when pixels are specified according to the plate scale of a given SI).

The 'D' and 'N' responses are provided for programmer convenience. They contain response messages that give the programmer more insight into what is happening internally with the software.

In order to allow the user to control the verbosity of intermediate responses, a 'verbose' environment variable/global argument allows the user to specify one of three levels for intermediate responses:

1) NONE: No intermediate responses will be sent to the user, except for intermediate responses from the session subscribe command;
2) NORMAL: Intermediate responses will be sent to the user ('I' and 'W' responses);
3) ALL: All intermediate responses will be sent to the user.

The default verbosity is NONE. Telnet users will probably want to use the NORMAL level. To override the NONE verbosity, a user can do one of the following:

1) In the user's XML file, set the default verbosity (attribute verbose) to NORMAL or ALL.
2) Override the default by specifying the verbosity at the end of a command: "`verbose=NONE|NORMAL|ALL`". (Applies only to that command.)
3) Issue a set command to change the verbosity so that all commands issued after this point will receive intermediate responses according to the specified verbosity:

   "`set verbose= NONE|NORMAL|ALL`".

The keywords in the response syntax are actually labels for the values. They may be turned off by setting the showLabels keyword to 'no'. When this is done, only the values are shown.

In all responses with returned values, if showLabels is set to yes, the string "keyword=" will precede any returned value, where "keyword" is replaced with a relevant label. This label will vary depending on the command issued, but as a general rule, if the command is a session subscribe, get, or set command, the labels will correspond to the data elements specified in the command. For example, if the user issues the following subscribe command:

```
5 subscribe list=[latitude longitude]
```

Then the response will contain the labels "latitude=" and "longitude=" before the values for those data elements:

```
5 I latitude=32.4374321 longitude=-96.4374389
```

Thus, an SI may parse responses for information of interest by scanning for the relevant keywords. Conversely, if showLabels were set to no, then the above response would take the following form:

```
5 I  32.4374321  -96.4374389
```

For commands that send general response messages back to the user (i.e., they do not involve data elements), the label will typically be the string "message=":

```
7 : message=”Command completed”
```

Finally, please note that some command responses may not have any values associated with them, i.e., they may only have a message ID and response type (see the examples below).

<u>Examples (with the default, showLabels=yes): (Note: these are responses to some of the commands in section 3.3.1.1.)</u>

```
101 A <LF>
102 A <LF>
102 : <LF>
103 A <LF>
104 A <LF>
104 : sibs.ra=23.76223 sibs.dec=43.22299<LF>
103 : DONE<LF>
105 A <LF>
105 : DONE<LF>
106 A <LF>
106 : <LF>
107 A <LF>
107 : <LF>
101 : message="All sub-commands completed successfully\<LF>
-7 ta_tsc.tsc_fd_pos_abs fd_des_pos_abs_quat=
    [-0.005480571642639572 -0.001715481526798551
    0.999983510092842]\<LF>
-7 W message=\"SEQ_COUNT_CHG\"\<LF>
\<LF>
```

```
101 : DONE\<LF>
"<LF>
```

Unimplemented commands or arguments result in an Error (E) response. For example, sending the following two commands to MCCS:

```
108 ta_pos.stow
109 sma.chop start=yes
```

results in the following responses:

```
108 A
108 E message="stow is not yet implemented"
109 A
109 E message="chop has unimplemented arguments"
```

Note that responses do not necessarily come in the order that the commands were issued. Also, response 101 includes an optional message=<string> in addition to the "101 :" at the start of the final response. Response strings can extend over multiple lines (with '\' preceding each <LF> or quote sign (") embedded within the string). In this example, the value of the string following "message=" is the concatenation of the command the MCCS issued to the TA to cause the requested action, and the resulting response from the TA. Such internally-generated commands use negative msgID values to differentiate them from user-issued commands (which only use positive msgID values as noted in section 3.3.1).

In response 104 the position may not have been the correct final position (based on the examples in the previous section) because the user's program did not wait until the final response was received before issuing the get command. The actual data returned with responses will evolve throughout the life of the observatory. It is recommended that programs and scripts not assume a fixed data content in the response, as this field will generally be used by the MCCS to report various values which might be of interest. If particular data values are of interest, the commanding system should specifically request those values. If the user wants to be aware of the returned information from commands, the developer of that user's system may wish to capture the full text of those responses for display or logging, allowing the user to review the responses manually.

Within an error or warning response (respType = E, S, F, W, or N), the MCCS includes after the respType a quote-delimited text string describing the error. If a single SCL command sends multiple commands internally and fails because one or more of them fails, the final command response contains the roll up of all error responses. Additional information, such as error number, may be included as a keyword-value pair after the error string.

3.3.1.3 Binary Responses

Binary responses are of the form:

<SOH> <respLength> <bmsgID> <respType> {<status> [<bdataLength>] <binaryData>} <EOT>

where <bdataLength> is only present for indefinite length data types. A given binary response may contain zero or more data elements, where each data element is specified

by the <status>, <bdataLength>, and <binaryData> fields. All fields of the binary response are in big-endian byte order.

Table 5. Binary SCL Command Responses

Token	Description
<SOH>	Start of Header sequence, the ASCII SOH character [0x01]
<respLength>	8 bytes containing, in binary (long long), the number of bytes for all status, bdataLength, and binaryData elements combined.
<bmsgID>	4 bytes containing, in binary (int), the msgID number submitted by the user with the command (see section 3.3.1.1, ASCII Commands).
<respType>	Same as in Table 4 (1 byte)
<status>	1 byte indicating the status of the data element. A value of 0 indicates the element is set to something (i.e., is valid), a value of 1 means the element is "NotSet" (i.e., has not been populated with any data yet), and a value of 2 means the element is "NotFound" (i.e., the data element was not found in the MCCS data tree). If this byte has a value of 1 or 2, the bdataLength and binaryData fields are omitted for the data element (since no data exists for the data element).
<bdataLength>	4 bytes containing, in binary (int), the length of <binaryData> in bytes. This field is included in front of variable length data types (STRING and BINARY) only.
<binaryData>	Variable number of bytes (depends on the representation of the data item), that contains the value of the data element in binary format (as it appears in memory).
<EOT>	End of Transmission sequence, the ASCII EOT character [0x04]

Note that all binary responses have a header of 14 bytes and a footer of 1 byte. The total response length is therefore calculatable as = 15 + value of <respLength>, since <respLength> contains the sum of all the <status>, <bdataLength>, and <binaryData> elements present in the response.

Typically, binary responses will be used in conjunction with subscribe commands, providing a more efficient way to get data from the MCCS. For example, if the user issues the following subscribe command:

```
5 subscribe list=[latitude longitude heading]
```

The subsequent binary responses would each contain three data elements, one for each of the data items specified in the list argument. So the fields <status> and <binaryData> would each be repeated three times within the response (note that the <bdataLength> field is not included since these data elements do not have a representation of STRING or BINARY). The data elements will be listed in the same order they were specified in the command, so latitude will be first, followed by longitude and then heading. To illustrate what will be contained in a typical binary response, assume that each of the data items specified in the command above is a FLOAT8 type (see Table 6 below). The subsequent binary response would contain the following:

1. A 14 byte header, consisting of a 1 byte character (ASCII SOH character), 8 bytes for the response length (number of bytes in all status, bdataLength, and binaryData fields combined)- in our example, response length will have a value of 27 (each data element has a 1 byte status field and 8 byte binaryData field, and we have 3 data elements), 4 bytes for the message ID (in our case, the value here will be 5), and 1 byte for the response type (in our case, the value will be 'I').
2. 27 bytes of data, consisting of three data elements. Each data element consists of a 1 byte status field (containing a value of 0 since the data exists) and an 8 byte binaryData field (containing the binary form of the data). The binaryData field is 8 bytes long since the representation for each of our data items is FLOAT8.
3. A 1 byte footer, consisting of a 1 byte character (ASCII EOT character).

As a more complex example, let's assume we've subscribed to three data elements with the following data types: FLOAT4, STRING, and INT2. The FLOAT4 data element has not been populated with any data yet, the STRING data element has a value of "hello", and the INT2 data element has a value of 10. The subsequent binary response would contain the following:

1. A 14 byte header, consisting of a 1 byte character (ASCII SOH character), 8 bytes for the response length- in our example, response length will have a value of 14 (see the next step for how this is calculated), 4 bytes for the message ID, and 1 byte for the response type.
2. 14 bytes of data, broken down as follows:
   i. FLOAT4 data element- This data element only has the 1 byte status field, which is set to 1 since the data item is not populated yet. There is no binaryData field since no data exists for the data item.
   ii. STRING data element- This data element has the 1 byte status field, the 4 byte bdataLength field (which contains a value of 5), and a 5 byte binaryData field (the string "hello" contains 5 characters, each of which takes up a byte of memory).
   iii. INT2 data element- This data element has the 1 byte status field, and a 2 byte binaryData field (INT2 is a signed 2 byte integer).
3. A 1 byte footer, consisting of a 1 byte character (ASCII EOT character).

Table 6 lists the properties of the various binaryData elements based on the data type.

Table 6. Binary Data Properties

Type	Properties
STRING	Sequence of standard 8 bit ASCII characters with no null termination
BINARY	Serialized byte sequence
BYTE	Signed 1 byte integer
UINT1	Unsigned 1 byte integer
INT2	Signed 2 byte integer

Type	Properties
UINT2	Unsigned 2 byte integer
INT4	Signed 4 byte integer
UINT4	Unsigned 4 byte integer
BOOL4	Represents a 4 byte logical value (true (1) or false (0))
FLOAT4	4 byte (single-precision) real number in IEEE format
FLOAT8	8 byte (double-precision) real number in IEEE format
SEXA8	A FLOAT8 type that supports sexagesimal notation (e.g., 15d14m37.45s).
TIME8	Used for timestamps, consists of two 4 byte integer parts, the first part representing the number of seconds since 1970 and the last part representing the number of nanoseconds since the beginning of the second.
COMPLEX8	Contains two FLOAT4 numbers, which are used to represent a single complex value. The real component is represented by the first FLOAT4, while the imaginary component is represented by the the second FLOAT4.
UCOMPLEX8	Contains two FLOAT4 numbers, which are used to represent a complex value on the unit circle. The real component is represented by the first FLOAT4, while the imaginary component is represented by the the second FLOAT4.
COMPLEX16	Contains two FLOAT8 numbers, which are used to represent a single complex value. The real component is represented by the first FLOAT8, while the imaginary component is represented by the the second FLOAT8.
UCOMPLEX16	Contains two FLOAT8 numbers, which are used to represent a complex value on the unit circle. The real component is represented by the first FLOAT8, while the imaginary component is represented by the the second FLOAT8.
QUAT16	Contains four FLOAT4 numbers, which are used to represent a single quaternion value. The real component is given first, followed by the three imaginary components.
UQUAT16	Contains four FLOAT4 numbers, which are used to represent a unitary quaternion value. The real component is given first, followed by the three imaginary components.
QUAT32	Contains four FLOAT8 numbers, which are used to represent a single quaternion value. The real component is given first, followed by the three imaginary components.
UQUAT32	Contains four FLOAT8 numbers, which are used to represent a unitary quaternion value. The real component is given first, followed by the three imaginary components.
INTVECTOR8	Contains two INT4 numbers, which are used to represent a 2 dimensional vector.
INTVECTOR12	Contains three INT4 numbers, which are used to represent a 3 dimensional vector.
VECTOR16	Contains two FLOAT8 numbers, which are used to represent a 2 dimensional vector.
VECTOR24	Contains three FLOAT8 numbers, which are used to represent a 3 dimensional vector.
UVECTOR24	Contains three FLOAT8 numbers, which are used to represent a 3 dimensional unit vector.
MATRIX72	Contains nine FLOAT8 numbers, which are used to represent a 3x3 matrix. The first three numbers represent the first row of the matrix, the second three numbers represent the second row of the matrix, and the final three numbers represent the third row of the matrix.
UMATRIX72	Contains nine FLOAT8 numbers, which are used to represent a unitary 3x3

Type	Properties
	matrix. The first three numbers represent the first row of the matrix, the second three numbers represent the second row of the matrix, and the final three numbers represent the third row of the matrix.

See section 3.3.1 for the method of requesting binary responses.

Unlike ASCII responses, binary responses do not contain any keywords (labels) or attributes (e.g., units=sec). STRINGs and BINARY data types are sent as a sequence of bytes, without padding or null termination.

The binary format (type) of data values is defined in the housekeeping data Appendix B. Please note that keeping track of the sequence of data elements in a binary response is left to the commanding system, but, as is described above, this sequence will always match the order of the data elements given in a subscribe or get command's list argument. Since the user must know this sequence up front, however, this means that the 'trigger=all' feature of the subscribe command (see section 4.4) may not be used in conjunction with binary responses.

3.3.2 SI Data Interface (data-definition XML files)

The MCCS requires certain data from every Science Instrument (SI) in order to determine and publish the SI reference frame information for use in transformation to/from other reference frames and for creating boresight reticules and Field Of View (FOV) indicators on imager overlays. This section describes an interface that allows the SIs to provide that data to the MCCS and defines the data interface between the SIs and MCCS only.

Before an observing flight, the SI team must create an SI Data XML file containing the following information:

1) SI mounting orientation relative to the SI Mounting Flange Reference Frame (SIMFRF) as shown in Figures 3 and 4. The orientation is given by a rotation angle (rotation_si). Here the SI rotation angle is about the z-axis of SIMFRF (using the right-hand rule) and gives the orientation of the SI x and y axes relative to the x and y axes of SIMFRF. rotation_si is an angle in degrees.
2) TA focus position (ta_focus_position_si) for the SI being mounted. This is the location (in millimeters) on the Z-axis of the SIMFRF (see Figure 3) where the TA focus is located for the SI.
3) The pixel array scale factors in both SI axes (x_scale_si and y_scale_si). This is the plate-scale of the detector array, which may not be the same as for the TA at the above focus position (because of re-imaging optics within the SI). x_scale_si and y_scale_si are in arcsec/mm.
4) The separation between array pixels in the SI reference frame (x_sep_si, y_sep_si). x_sep_si and y_sep_si are in microns and are measured from the center of an unbinned pixel to the center of the adjacent unbinned pixel (horizontally or vertically, respectively).

5) Pixel ranges in both SI axes (x_pixel_min_si, x_pixel_max_si, y_pixel_min_si and y_pixel_max_si), and pixel ID (i.e., x_pixel_boresight_si, y_pixel_boresight_si) of SI boresight and pixel ID (i.e., x_pixel_origin_ta, y_pixel_origin_ta) of the telescope's optical axis. This is given so the location of the SI boresight with respect to the nominal TA optical axis is known and an outline of the detector array of an SI can be overlaid on the FOV of imagers.

6) Lastly a Boolean indicator (fpi) as to whether or not the Focal Plane Imager (FPI) is in the light path due to the use of a dichroic or a fully reflective tertiary mirror.

Figure 3 defines a Cartesian coordinate system relative to the center of the SI mounting flange to be used by all the SI teams to provide the mounting orientation information to the MCCS. With the TA parked at 40 degrees elevation, the X-axis of this system (see front view) points out the left wing, and Y points directly vertical relative to the aircraft. These axes intersect the dowel pin locations on the Instrument Mounting Flange (IMF) and the center of the IMF. The Z axis (see side view) points from the flange center out into the cabin toward the nose of the aircraft (positive through the SI itself). Z is parallel to the TA U-axis but is offset by 84 millimeters. This (X, Y, Z) definition provides a right-handed system that remains fixed relative to the mounted SI as it rotates with changes in TA elevation. The actual elevation rotation axis is about the TA U axis down the center of the NM tube. Figure 4 is another front view with the SI flange in detail showing the offset of the V, W axes origin (U-axis) from the X, Y axes (Z-axis origin).

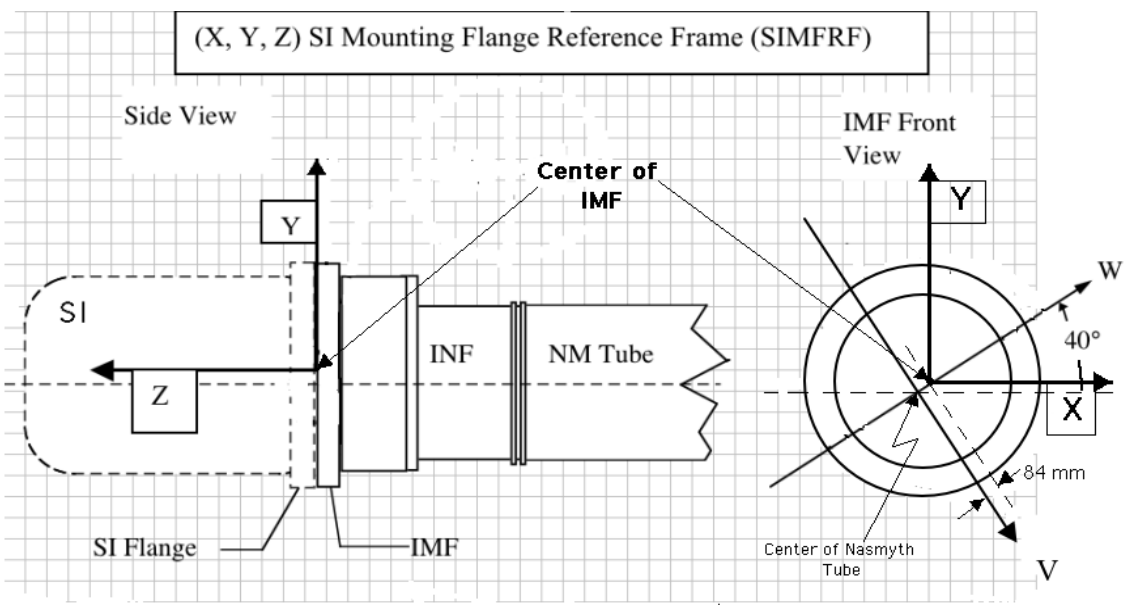

Figure 3. (X, Y, Z) SI Mounting Flange Reference Frame (SIMFRF)

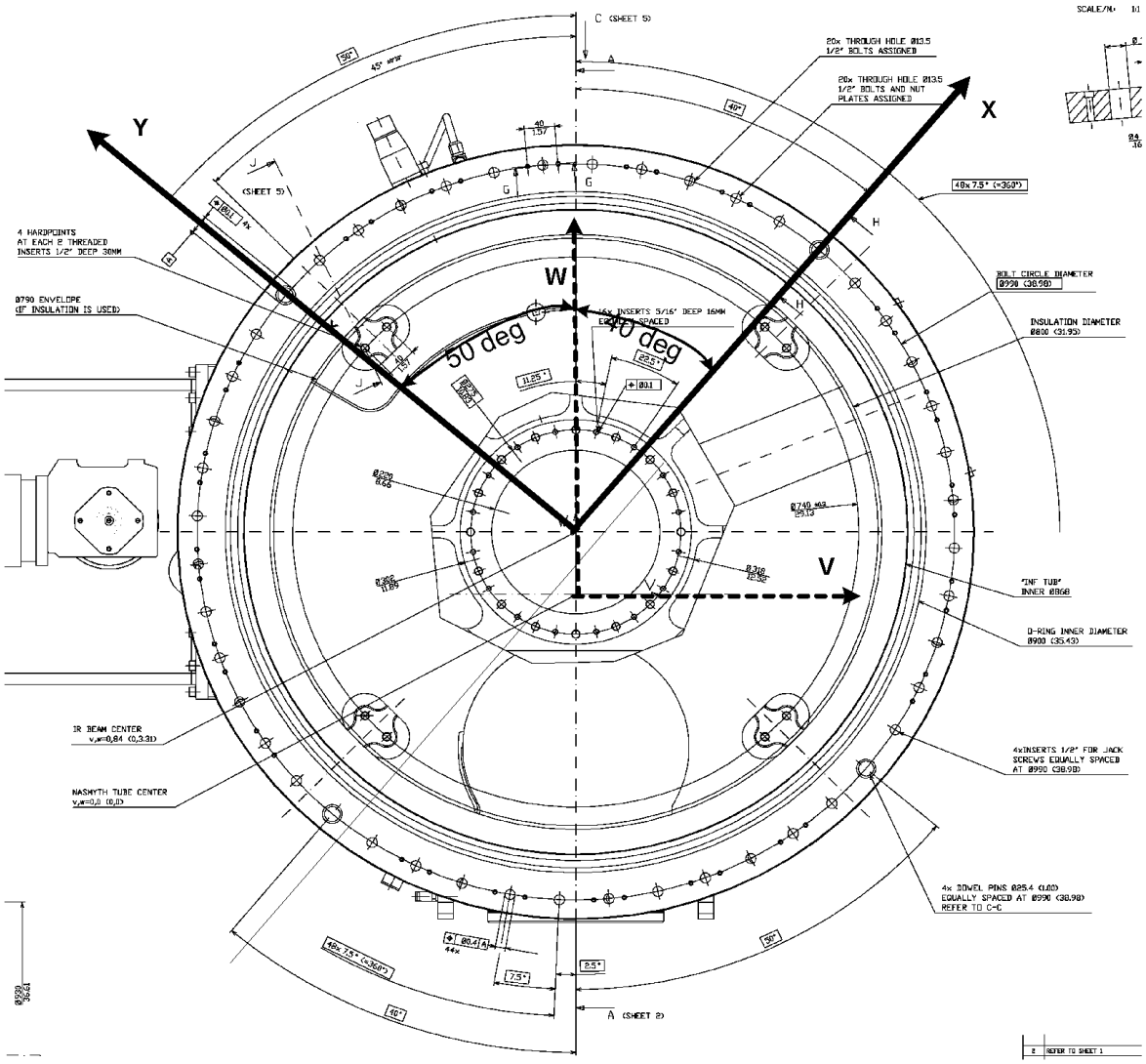

Figure 4. SI (V, W) and SIMF (X, Y) Reference Frames

The SIs teams must provide the "required" list of SI data in the format described herein.

The data definition shall be provided as an XML file with the indicated standard names for each data item. The XML data item names are required to be all lowercase. XML tags and attributes are also case sensitive (e.g., 'Value' and 'DataNode' must be mixed case as shown here). The data definition should also provide the units and limits for the data where appropriate. Note that units must match the descriptions in this section for each parameter.

Here is an example of a partial XML file for the HIPO SI with the first (non-editable) section replaced by an ellipsis other than the header (Please note that distributor and dataGroup settings should **not** be edited):

```
<?xml version="1.0" standalone="no"?>
<!DOCTYPE DataNode SYSTEM "datanodes.dtd">

<DataNode name="hipo" label="HIPO Science Instrument"
          rcs_id="$Id: hipo_data.xml,v 1.7 2002/010/24 23:27:07 jrobbins test $"
     description="Data provided by HIPO"
     distributor="true" dataGroup="false">

     … (non-editable stuff) …

<!--
 ==  EDITABLE SECTION STARTS HERE
 ==
 ==  The DataNode for each science instrument mode must contain the same list of value elements,
 ==  named rotation_si, ta_focus_position_si, x_scale_si, y_scale_si, x_sep_si, y_sep_si,
 ==  x_pixel_min_si, y_pixel_min_si, x_pixel_max_si, y_pixel_max_si, x_pixel_boresight_si,
 ==  y_pixel_boresight_si, x_pixel_origin_ta, y_pixel_origin_ta, and fpi.  The names
 ==  are required but the values of the initial, hilim, lolim, and other settings will vary from mode
 ==  to mode and instrument to instrument.
 ==
 ==  In many cases, the x and y values will be identical, but since there may be instruments (or
 ==  even modes within an instrument) for which they are not, both must be supplied.  Similarly, in
 ==  many cases, a particular value will be the same in all modes of operation, but since there may
 ==  be an instrument in which the value differs by mode, we require the value in each mode.
 -->

<DataNode name="si_config" label="SI configuration"
     description="SI configuration for the current observing mode"
     dataGroup="false">

<!--
 ==  The name within each FieldValue element must match the name of the DataNode (below) and
 ==  will be used as an allowed value for the hipo.mode current=… command.
 -->

     <Value name=”current_mode” rep=”STRING” initial=”hipo_mode_2”
          label=”Current mode” description=”Current configuration mode for the SI”>
                    <FieldValue
                         name=”stare”    value=”1” >
                    </FieldValue>
                    <FieldValue
                         name=”hipo_mode_2”    value=”2” >
                    </FieldValue>
                    <FieldValue
                         name=”hipo_mode_3”    value=”3” >
                    </FieldValue>
                    *
                    *
                    *
                    <FieldValue
               name=”hipo_mode_n”    value=”hipo_mode_n” >
                    </FieldValue>

     </Value>
```

```
<!--
 == The analog_chops string is a list of additional chop names appropriate to the instrument
 == (“plus”, “minus”, “zero”, and “no_chop” are supplied by default).
 -->

    <Value name=        “analog_chops”
           rep=         “STRING”
           label=       “ANALOG CHOPS”
           initial=     “north west south east”
           format=      “%s”
           dataGroup=   “true”
           description= “Additional chop positions for the HIPO instrument”>

      <Value name=”mcstime” rep=”FLOAT8” units=”seconds” label=”MCS Timestamp”
             format=”%lf” attribute=”yes”
             description=”Time the data arrived at MCS (seconds since 1970)”
             />
    </Value>

</DataNode>

<!--
 == Description of the stare mode.
 -->

<DataNode name="stare" label="SI Data"
    description="SI mounting and scaling data"
    dataGroup="false">

<!--
 == Angle between SI axes (x,y) and Mounting Flange axes (v,w), typically 50 degrees.
 -->

    <Value name=”rotation_si” rep=”FLOAT8” initial=”3.1” units=”degrees”
        lolim=”-180.0” hilim=”180.0”
        label=”SI rotation” description=”SI rotation relative to the mounting flange”
        format=”%lf”>
    </Value>

<!--
 == Backfocus for the instrument in this mode (mm forward of flange).
 -->

    <Value name=”ta_focus_position_si” rep=”FLOAT8” initial=”.3”
        units=”millimeters” hilim=”900.0”    lolim=”-300.0” hiwarn=”500.0” lowarn=”-100.0”
        label=” TA focus position” description=” TA focus position on the z-axis of SIMFRF
        for a given SI” format=”%lf”>
    </Value>

<!--
 == Horizontal plate scale for the array and canonical backfocus used in this mode.
 -->

    <Value name=” x_scale_si” rep=”FLOAT8” initial=”10.0” units=”arcsec/mm”
        label=”SI X pixel scale” description=”SI x-axis pixel scale factor” format=”%lf”>
    </Value>

<!--
```

```
 ==  Vertical plate scale for the array and canonical backfocus used in this mode.
 -->

    <Value name=" y_scale_si" rep="FLOAT8" initial="10.0" units="arcsec/mm"
          label="SI Y pixel scale" description="SI y-axis pixel scale factor" format="%lf">
    </Value>

<!--
 ==  Distance between centers of pixels adjacent horizontally.
 -->

    <Value name="x_sep_si" rep="FLOAT8" initial="1.0" units="micrometers"
          label="SI X pixel separation" description="SI x-axis pixel separation(center to center)"
          format="%lf">
    </Value>

<!--
 ==  Distance between centers of pixels adjacent vertically.
 -->

    <Value name="y_sep_si" rep="FLOAT8" initial="1.0" units="micrometers"
          label="SI Y pixel separation" description="SI y-axis pixel separation(center to center)"
          format="%lf">
    </Value>

<!--
 ==  Position of the first column in the array.
 -->

    <Value name="x_pixel_min_si" rep="INT4" initial="-31"
          label="Min SI X pixel" description="SI x-axis minimum pixel number" format="%d">
    </Value>

<!--
 ==  Position of the last column in the array (there are x_pixel_max_si - x_pixel_min_si   + 1
 ==  columns).
 -->

    <Value name="x_pixel_max_si" rep="INT4" initial="32"
          label="Max SI X pixel " description="SI x-axis maximum pixel number " format="%d">
    </Value>

<!--
 ==  Initial x pixel coordinate of the SI boresight.
 -->

    <Value name=" x_pixel_boresight_si" rep="FLOAT8" initial="0"
          label=" X location of SI boresight" description=" Column of array in which lies the SI boresight"
          format="%lf">
    </Value>

<!--
 ==  x pixel coordinate of the TA boresight (optical axis).
 -->

    <Value name=" x_pixel_origin_ta" rep="FLOAT8" initial="0.5"
          label=" X location of TA optical axis" description=" Column of array in which lies the TA optical
          axes" format="%lf">
```

```
    </Value>

<!--
 == Position of the first row in the array.
 -->

    <Value name="y_pixel_min_si" rep="INT4" initial="-15"
        label="Min SI y pixel" description="SI y-axis minimum pixel number" format="%d">
    </Value>

<!--
 == Position of the last row in the array (there are y_pixel_max_si - y_pixel_min_si   + 1 rows).
 -->

    <Value name="y_pixel_max_si" rep="INT4" initial="16"
        label="Max SI Y pixel " description="SI y-axis maximum pixel number " format="%d">
    </Value>

<!--
 == Initial y pixel coordinate of the SI boresight.
 -->

    <Value name=" y_pixel_boresight_si" rep="FLOAT8" initial="0"
        label=" Y location of SI boresight" description="Row of array in which lies the SI boresight"
        format="%lf">
    </Value>

<!--
 == y pixel coordinate of the TA boresight (optical axis).
 -->

    <Value name=" y_pixel_origin_ta" rep="FLOAT8" initial="0.5"
        label=" Y location of TA optical axis" description="Row of array in which lies the TA optical
        axes" format="%lf">
    </Value>

<!--
 == Set fpi = "true", if a dichroic tertiary mirror is used and the FPI may be used to determine
 == chop calibration, etc.
 == Set fpi = "false", if the FPI may not be used in this mode.
 -->

    <Value name=" fpi" rep="BOOL4" initial="TRUE"  form="ENUM"
        label="Focal Plane Imager" description="Focal Plane Imager present in light path" format="%s">

        <FieldValue name="false"  value="0" />
        <FieldValue name="true"   value="1" />
    </Value>

</DataNode>

<!--
 == Description of the second mode for the instrument (here called "hipo_mode_2" for lack of a
 == better name).
 -->

<DataNode name="hipo_mode_2" label="SI Data"
    description="SI mounting and scaling data"
    dataGroup="false">
```

```
<Value name="rotation_si" rep="FLOAT8" initial="3.1" units="degrees"
    lolim="-180.0" hilim="180.0"
    label="SI rotation" description="SI rotation relative to the mounting flange" format="%lf">
</Value>

<Value name="ta_focus_position_si" rep="FLOAT8" initial=".3"
    units="millimeters" hilim="900.0" lolim="-300.0" hiwarn="150.0" lowarn="-125.0"
    label=" TA focus position" description=" TA focus position on the z-axis of SIMFRF for a given
    SI" format="%lf">
</Value>

<Value name=" x_scale_si" rep="FLOAT8" initial="10.0" units="arcsec/mm"
    label="SI X pixel scale" description="SI x-axis pixel scale factor" format="%lf">
</Value>

<Value name=" y_scale_si" rep="FLOAT8" initial="10.0" units="arcsec/mm"
    label="SI Y pixel scale" description="SI y-axis pixel scale factor" format="%lf">
</Value>

<Value name="x_sep_si" rep="FLOAT8" initial="1.0" units="micrometers"
    label="SI X pixel separation" description="SI x-axis pixel separation" format="%lf">
</Value>

<Value name="y_sep_si" rep="FLOAT8" initial="1.0" units="micrometers"
    label="SI Y pixel separation" description="SI y-axis pixel separation" format="%lf">
</Value>

<Value name="x_pixel_min_si" rep="INT4" initial="-31"
    label="Min SI X pixel" description="SI x-axis minimum pixel number" format="%d">
</Value>

<Value name="x_pixel_max_si" rep="INT4" initial="32"
    label="Max SI X pixel " description="SI x-axis maximum pixel number " format="%d">
</Value>

<Value name=" x_pixel_boresight_si" rep="FLOAT8" initial="0"
    label=" X location of SI boresight" description=" Column of array in which lies the SI boresight"
    format="%lf">
</Value>

<Value name=" x_pixel_origin_ta" rep="FLOAT8" initial="0.5"
    label=" X location of TA optical axis" description=" Column of array in which lies the TA optical
    axes" format="%lf">
</Value>

<Value name="y_pixel_min_si" rep="INT4" initial="-15"
    label="Min SI y pixel" description="SI y-axis minimum pixel number" format="%d">
</Value>

<Value name="y_pixel_max_si" rep="INT4" initial="16"
    label="Max SI Y pixel" description="SI y-axis maximum pixel number" format="%d">
</Value>

<Value name=" y_pixel_boresight_si" rep="FLOAT8" initial="0"
    label=" Y location of SI boresight" description=" Row of array in which lies the SI boresight"
    format="%lf">
</Value>
```

```
    <Value name=" y_pixel_origin_ta" rep="FLOAT8" initial="0.5"
        label=" Y location of TA optical axis" description=" Row of array in which lies the TA optical
        axes" format="%lf">
    </Value>

    <Value name=" fpi" rep="BOOL4" initial="TRUE" form="ENUM"
        label="Focal Plane Imager" description="Focal Plane Imager present in light path" format="%s">

        <FieldValue name="false"  value="0" />
        <FieldValue name="true"   value="1" />
    </Value>

</DataNode>

<DataNode name="hipo_mode_3" label="SI Data"
    description="SI mounting and scaling data"
    dataGroup="false">
*
*
*

</DataNode>

<DataNode name="hipo_mode_n" label="SI Data"
    description="SI mounting and scaling data"
    dataGroup="false">
        *
        *
        *
</DataNode>

</DataNode>
```

As shown above, default or initial values should be provided within the file for all data items. The DataNode element named si_config contains two Values: current_mode, holding the indicator for the current configuration which has been defaulted to stare, the next DataNode definition in the file and analog_chops, containing a list of additional chop names for the MCCS software to accept.

The current_mode Value is an enumerated list defined by the list given of FieldValues. That list needs to match the list of configuration mode DataNodes that follow the si_config definition. The stare FieldValue is the first in that list of SI configuration definitions where each definition contains the full complement of required data from the SI for one observing configuration mode. The DataNode name, stare, is simply a label, so it should be given a name that is descriptive of the observation to be made with the configuration it defines. Only one SI mode can be the "current_mode" at a given time, since it is this mode by which the MCCS will point the TA.

Limit values (shown above for focus position) allow MCCS and its GUIs to properly display and alert MCCS operators that a dynamic data value is approaching (warn) or has reached (error) one of its limits. Also, other data beyond what the MCCS requires can also be included in the file to make it available to other MCCS operators/users. But, the "required" data listed above must maintain a fixed definition and structure for each SI configuration block so that the internal MCCS applications can locate that data in a consistent way for any SI.

In order for the SI Data XML file to be used, a session (usually an SI team session) must declare the science instrument to be used by issuing the command (for this example – "hipo"):

```
10  coord.instrument   name=hipo
```

After this command, the file called "hipo_data.xml" is used to create a new data block within the MCCS data handling (cache) system. There may be more than one SI data block in the data handling system. These data can then be accessed by their name just as any other MCCS Housekeeping (HK) data using SCL commands "session.subscribe" and "session.get" (see section 4.4).

This command also gives a name, "hipo" to the "*instrument*" command handler (see the SCL User Manual for a description of the "*instrument*" command handler), and assigns to this command the authority to alter the parameters that have been stored in the SI data block named "hipo". The complete set of MCCS commands available to any science instrument are listed in Appendix A in the section called 'rien'. In actual use, each command would be prefaced by the instrument name (such as 'hipo') instead of 'rien'.

The user can now select a particular hipo mode/configuration by setting the current instrument mode to the name of the desired mode given in the SI Data XML file (say "stare") by entering:

```
11  hipo.mode current =stare
```

Other individual data items within a configuration block can be "set" by the SI to allow "tweaking" of the pre-defined configuration values during observation setup. For example, updating the TA focus position to half a millimeter on the z-axis of the SIMFRF (as defined in Appendix A) for the current configuration mode:

```
6 hipo.set hipo_mode_2.ta_focus_position_si=0.5
```

This only sets the data in HK, not in the XML file itself. *To generate a new XML file containing the new setting, use the "save" command, e.g.,*

```
99 hipo.save
```

This new XML file is given the file name "hipo.<timestamp>.xml".

A "set" command will need to be issued each time any dynamic data value changes. All MCCS "subscribers" to that data will automatically get notification of the value change.

If the investigator wishes to "reset" the data configuration to the default (initial) values from the original XML definition file they can issue the "restore" command at their MCCS session:

```
7 hipo.restore file=hipo_data.xml
```

This restores all the configurations from the hipo_data.xml file. The following command will restore just the configurations for modes 2 and 3:

```
7 hipo.restore file=hipo_data.xml list=[hipo_mode_2
  hipo_mode_3]
```

The HK data will be restored to the values indicated in the XML for those modes listed.

A "watch" command can be set up by any user (including the investigator) that will allow them to monitor SI data with other limiting values if they wish to create "user defined" alerts. To define an alert for when the focus position exceeds 0.35 meters, the user issues:

```
8 watch trigger=hipo.hipo_mode_2.ta_focus_position_si
   max=0.35
```

An alert will be returned to the user's MCCS session when the focus position transitions the 0.35 millimeters value from below. That alert is then cleared when the value for focus position falls below the 0.35 millimeter limit.

Any (numeric) MCCS HK data item can be set up to generate an Alert using "watch" which should generally be used to monitor the data used for triggering events, such as "watching" TA Line Of Sight (LOS) to trigger for a Rotation of Field (ROF) update.

4. SOFIA COMMAND LANGUAGE DESCRIPTION

4.1 Interface Requirements

All communications between the SI and MCCS, or between other subsystems which use this interface and MCCS, will be per the interface requirements and network services described in section 3.

Socket connections to the TA are defined in SE03-047, TA_MCCS_F ICD. This information is captured in MCCS XML files for the WFI (ta_wfi_socket.xml), FFI (ta_ffi_socket.xml), FPI (ta_fpi_socket.xml), TA commands (ta_cmds_socket.xml) and TA housekeeping data (ta_hk_socket.xml).

TAIPS multicast addresses are defined in SE03-2011, MCCS Network ICD. This information is captured for MCCS XML files for the WFI (ta_wfi.xml), FFI (ta_ffi.xml), FPI (ta_fpi.xml) and MCCS Naming Service (NamingService.xml)

CDDS ports are defined in SE03-053, CDDS_MCCS ICD RS-422 Messages (SD00034). This information is captured for MCCS in cdds.xml and cdds_port.xml.

4.2 Commands Addressed to an SI or Subsystem

An SI or subsystem is not required to receive commands from the MCCS. However, some SIs or subsystems may be capable of receiving commands which implies that they must support the protocols defined in section 3.

4.3 Commands Addressed to MCCS

4.3.1 Command and Data Context

A command may force a context for its evaluation by following the syntax below:

```
SubA.SubB.SubC.Cmd
```

Where SubX indicates a particular subsystem or process, the string of Subs indicates the hierarchy, and the Cmd indicates the command being interpreted within the given context. (While the context suggests a command will be processed by the software implementing that context, in some cases that may not be true, and it should not be assumed.) In many cases, however, the MCCS will have reserved commands which involve a specific context, and will process those commands according to the reserved context.

The MCCS will attempt to resolve parameter names by looking for the most significant data context which contains that name. When no context is provided for a command ('get list=RA'), the system will attempt to provide the most meaningful value. For some command values, this may be a result calculated by MCCS software. (The command example above will provide the best known value for RA, which may be calculated internally. The user must enter 'get list=subsystem.RA' to get the RA as provided by a particular subsystem.) If

several equally likely choices are available, an error will be returned, and the request can be resubmitted with the appropriate context.

Context may be used for parameter names as well. To refer to a particular variable in the context of a subsystem or process, one could express the variable with routing information:

```
get list=SubA.SubB.Temp1
```

This will have the effect of finding an object called Temp1 which exists in the context of SubA.SubB, and returning that object's value.

4.3.2 Argument Lists and Modifiers

In commands and responses, the keyword LIST (for example) may contain multiple arguments. An example for setting 3 elements and requesting the data to be returned is:

Examples:

```
001 bigObject.set height=1234 width=5678 length=3
002 Get List=[height width]
```

This gives a response such as:

```
001 :
002 : height=1234 width=5678
```

or, with showUnits turned on:

```
003 Get List=[height width] units=miles
003 : height=0.2337(units=miles) width=1.0754(units=miles)
```

Note that in the above command, the units are global because the modifier is not enclosed in parentheses.

Individual (i.e., not global) qualifiers may be added to each data item by appending them as attributes, within parentheses:

Generic syntax:
<keyword>=<value> (<keyword>=<value> {<keyword>=<value>})

Then, the following command sets the height in feet but the width in miles:

```
003 smallObject.set height=1234(units=feet)
    width=5678(units=miles)
004 Get List=[height width (units=miles)] showUnits=yes
```

will give

```
004 : height=1234(units=feet) width=5678(units=miles)
```

Attributes may also have attributes, which could result in several levels of parenthesized nesting:

```
005 coord.position name=squat (ra=705.62 (units="sidereal
    minutes") dec=85d1m12.3s)
```

See Appendix A to determine which arguments allow the user to adjust units – only arguments with SET in the ValueType column may have units set. Table 7 below lists common MCCS units and their abbreviations. When specifying a unit in a command, either the full or abbreviated form may be specified. (File /modstor/mccs/config/units.xml defines the full list of available MCCS units.)

Table 7. Common MCCS Units and Abbreviations

Full Unit Name	Accepted Abbreviation
arcminutes	arcmin
arcminutes per second	arcmin/sec
arcseconds	arcsec
arcseconds per second	arcsec/sec
arcseconds per year	arcsec/yr
astronomical units	au
degrees	deg
degrees per second	deg/sec
hertz	hz
hours	hr
julian years	yr
micrometers	micron
millimeter per second	mm/sec
millimeters	mm
milliseconds	msec
minutes	min
pixels	pix
pixels per second	pix/sec
seconds	sec
sidereal hours	sid_hr
sidereal minutes	sid_min
sidereal seconds	sid_sec

4.3.2.1 Keyword Mutual-Exclusivity

Sometimes within the command keyword set, there are mutually exclusive keywords – keywords that may not be sent with each other because they represent conflicting ways to input the same information. Error responses will be returned if mutually exclusive keywords are specified for the same command. For example, the user may not specify a position's "x-coordinate" in the equatorial reference frame and its "y-coordinate" in the galactic reference frame. The following command will return an error:

```
1 coord.position   name=star1 ra=12h13m14.5s  bii=–12.876
```

since ra and bii are mutually exclusive keywords. Currently, only commands within the following "integrated" command sets contain mutually exclusive command keywords:

- coord
- “instrument”; i.e., flitecam, forcast, great, hawc, hipo, etc
- nod
- session
- sma
- ta_pos
- ta_state

In Appendix A the mutual-exclusivity of command keywords is specified for individual keywords.

4.3.2.2 Defaults

SCL supports a “Global Default” structure for keywords. Default values of keywords are the same for all SCL sessions: If a default is settable and has been changed in one SCL session, it is changed for all sessions.

There are three basic kinds of keyword defaults, “fixed”, “same-as-last-time” (or “previous”), and “calculated”. Note that not all keywords have defaults. Some are “optional” and don’t have any defaults and some are “require-to-be-specified” and must be specified each time they are to be used.

A “fixed” default does not change throughout the flight. *The tables in Appendix A indicate which keywords have fixed defaults and what the fixed values are for those defaults.*

A “previous”, or “same-as-last-time” default will retain its value until reset. There are two types of previous defaults: those that have an initial value set automatically within the MCCS and those that require the initial value to be set at least once by a user. In the latter case, a default value is only assigned to a keyword after it has been used in an SCL command. When that command is next issued, the keyword will maintain the “same-as-last-time” default value, unless explicitly changed. Note that this default is the same for all SCL sessions.

Same-as-last-time defaults values are stored as Housekeeping items in a section *cmndgrp.command_name.keyword_name*.

Keywords with defaults already set to the desired value (either because they are “fixed” or because of their “previous” value), do not have to be included in a command line. For example, if the user sets up a chop and starts chopping via:

```
1 sma.chop amplitude=20 pos_ang=0 phase=10
  sync_src=internal  frequency=5
```

and then decides he really wanted a pos_ang of 2 degrees, he need only send:

```
2 sma.chop pos_ang=2
```

since most of the sma.chop command’s keywords have either fixed or same-as-last-time defaults.

A "calculated" default automatically gives a certain default value to a keyword or attribute depending on a calculation made by the MCCS. An example of this is the keyword "tracking" in the command "ta_pos.goto". If tracking is defined in the position name for the keyword "pos", then "tracking" is set to the appropriate value ("centroid" say) - otherwise it is set to "none" by the MCCS.

Some keywords are optional. They do not have a default value but they need not be specified to make the command valid. Whatever the optional keyword "activates" in the command is not required for the general activation of the command.

The tables in Appendix A contain a column "Default Type". In this column the letters "F", "P", "C", "R", and "O" will indicate the following for each keyword:

F – Fixed default
P – Previous default
C – Calculated default
R – Required to be specified input (no default)
O – Optional input (no default)

Following an "F" in the "Default Type" column will be the value of that fixed default in parenthesis, for example "F(off)". A "previous" default will either be represented by "P(R)" or "P(initial_value)": P(R) means that the default must be supplied initially by the user; P(initial_value) means the initial default is supplied by the MCCS, and this value is given.

SCL commands may contain mutually-exclusive keywords. In the Default Type column of the SCL tables (Appendix A), the presence of a "/O" after a "R" or "P" value; i.e., "R/O" or "P(R)/O" indicates that the keyword is "optional' in the sense that it is mutually exclusive with other keywords. These combinations mean that some subset of the keyword set are required inputs, but not all of them.

4.3.2.3 Global Keywords

In addition to the keywords associated with each specific command, there are also "global" keywords associated with the SCL. These keywords nominally can be used on any SCL Command. The list of global keywords currently consists of:

- verbose – turn on/off command output verbosity
- showunits – display units on output
- showlabels – display labels on output
- units – specifies the units for values
- format – specifies the format for values
- resp_format – specifies response format
  (valid values are: LEGACY, BINARY, FORMATTED)

- timeout – specified timeout for a given command
- attr – specify the name of the attribute to get
- fullname – display full path names on output

4.3.3 Aliases

An alias capability is provided in the SCL. Each token in a command (any string surrounded by white space, or other delimiting character such as a parenthesis) is checked against defined aliases in an alias table if its leftmost character is a $ sign. If an alias definition exists, the token is replaced by the string provided in the alias table. The replacement is performed as a string substitution (no variable substitution is performed), and only one substitution pass is performed. (Aliases contained in the substituted string are not expanded.)

The alias command is used to define an alias, while the unalias command is used to eliminate an alias definition. The typical session environment will include many predefined aliases. For example, 'logout' may perform a 'session.logout' command. Some of these aliases are locked, to prevent the user from inadvertently reassigning them and losing ready access to the original command. To see a list of aliases for your session, enter "get list=alias".

An alias must begin with a letter, and may include any number of alphanumeric characters and underscores after the initial letter.

Aliases may be used for values and keyword settings as well as commands. For example, '10 $g $l=$v' may be expanded to "10 get list=Voltage".

Some examples:

```
001 Alias temps="get list=[temp1 temp2 temp3]"
002 alias showAll="showUnits=yes showLabels=yes"
003 $temps
004 $temps $showAll
005 get list=TAposition($showAll)
```

Note that the keywords "temps" and "showAll" in the above example are not predefined ones. The user may choose any non-reserved word. An error will be returned if the chosen token is reserved.

4.3.4 Inlining

Inlining is the creation of named positions or offsets within another command. For positions, inlining provides a way to create a position with fewer commands than would otherwise be needed. However, inlining is the only way to create offsets.

Say *entity1* has two attributes, *att1* and *att2*, and say *entity1* is the value required for the keyword, *keyword1*, required in the command, *cmndgrp.command*, then the format of an in-line definition is shown by the italicized blue text in the following.

`msg_id cmndgrp.command` *keyword1= entity1 (att1= value1 att2=value2)*

Once an offset or position is defined, it can be used in the future in any command as a value for an offset or position type keyword, but with parenthetical attribute definitions omitted since those were defined inline previously.

As a concrete example, the following is an in-line definition of a position named "squat3".

```
6 coord.position name=squat3(ra=5h6m14.3s dec=85d1m12.3s)
```

The telescope may subsequently be moved to position squat3 by simply typing:

```
6 ta_pos.goto pos=squat3
```

4.3.5 Values and Escape Sequences

Values may be numeric or text. Text values may be words (a string of characters which are not delimiters) or strings. A string is entered by preceding and concluding it with a double quote mark (" "). If the user wishes to embed double quote marks within a string, they must be escaped (as a side note, if a STRING housekeeping data type contains embedded double quotes, the MCCS will escape the embedded double quotes (\") so the user can distinguish the embedded double quotes from the preceding and concluding double quotes). Generally, all printing ASCII characters may be entered into the string; while nonprinting characters and special delimiting characters that the user wants to treat as regular character (such as double quote marks) may be entered using the escape sequences below.

Only three characters have special meaning within a string: a quote mark, which ends the string; a backslash, which begins an escape sequence within the string; and a terminator (either <LF> or <CR>), which terminates the command (and thereby produces a syntax error since the concluding double quote mark was not specified).

Escape sequences are typical of those in C++ and Java, and include the following:

Table 8. Escape Sequences

Name	Escape Sequence	Octal Equivalent
Horizontal tab	**\t**	**\011**
Vertical tab	**\v**	**\013**
Backspace	**\b**	**\010**
New line	**\n**	**\012**
Carriage return	**\r**	**\015**
Double quote	**\"**	\042
octal byte code	**\0dd**	**\0dd**

4.4 Subscribing to Housekeeping (HK) Data

To subscribe to housekeeping data, a subscribe command has been provided:

<msg id> **subscribe list**=<list of value names>

This command allows the user to subscribe to any housekeeping data provided by MCCS (see Appendix B for a list of available MCCS housekeeping data). The items to subscribe to are provided after the **list** keyword. Note that if multiple items are listed, they must be enclosed in brackets ([]):

```
1 subscribe list=[fms.latitude fms.longitude fms.heading]
```

The subscribe command automatically provides the requested data when a specified condition occurs. The user may specify one of the following conditions:

1) The **trigger** keyword can be used to specify one or more data items to trigger the delivery of the requested data items. If one of these data items is updated, the user will receive the latest value for all items specified with the **list** keyword. An exception to this rule is the "all" designation (**trigger**=all), which causes the user to be notified when any of the items in the **list** are updated, but the notification only contains the latest value for the updated item(s) and omits the other items in the list.

   If *no* condition keyword is specified (**trigger**, **interval** or **sample**), then the first item in the **list** is the "trigger" (so in the example above, the user will be notified with the latest values for latitude, longitude, and heading whenever the value for latitude is updated; the user is not notified when longitude or heading is updated since they are not designated as "triggers").
2) Notification when every nth sample of the trigger item(s) arrive (using the **sample** keyword). Whenever the nth sample of a trigger item arrives, the user will be notified with the latest values for all the items specified in the **list** keyword (for example, if **sample**=5 is specified, the user will be notified every fifth time an update is received for the specified trigger item(s)).
3) Notification at a specified time interval using the **interval** keyword. When the specified time interval expires, the user is notified with the latest values for all the items specified in the **list** keyword.

When the trigger condition occurs, the user is notified with an intermediate response:

```
1 I fms.latitude=31.550000 fms.longitude=-97.133300
   fms.heading=0.0000000
```

A subscribe command will continue to run until:

1) The user cancels the command.
2) A terminating condition is met. The user may specify one of two terminating conditions:
   a. Terminate when a specified number of samples have been provided to the user (using the **n_times** keyword).
   b. Terminate when a specified time duration has expired (using the **duration** keyword).

The subscribe command is also used to log housekeeping data and contains some special keywords used for subscribing to alerts and alarms (see the description of the subscribe command in Appendix A for more details about these features as well as for additional details about the features described above).

Housekeeping data may also be obtained using the get command. The get command is similar to the subscribe command except that it only gives a one time update of the items specified in the **list** keyword – i.e., it gives the current values of the items specified and then terminates.

Some values requested in either a subscribe or get command may not be available. These will be indicated by special strings NaN (for "not a number"), NotSet (the value has not been populated yet), and NotFound (the value is not in MCCS housekeeping data), or will be presented as some default (but unlikely) value.

4.4.1 Non Housekeeping Gets

The get command can also be used to return special values that are not items defined in the housekeeping data (Appendix B). These include the following:

- *alias – a list of all currently defined aliases*
- active_sessions – list of all currently active sessions
- all_commands – list of all available commands
- commands – list of all active commands
- data_list – list of all available housekeeping data
- data_sources – list of all available data sources
- mission_id – current Mission ID (as read from the mission_id.txt file)
- session_name – name of the current session (i.e., your session)
- time – current MCCS time

4.5 Alerts and Alarms

4.5.1 Subscription to Alerts/Alarms

An Alert/Alarm subscription string consists of the following:

```
<msg id> subscribe
    list = <value>
    [source = <value>]
    [level = <value>]
    [trigger = <value>]
```

Tokens in the above (msg_id, value, =) are described in Table 3. Keywords are described in Table 9 below.

Table 9. Alert/Alarm Subscribe Command Keywords

Keyword	Description
subscribe	Subscribe to each of the housekeeping data items in the supplied list.
list	Items to retrieve. The value of the supplied argument can be an AlertNode object name or list option such as "all_alerts". This argument can also be a bracketed list, permitting multiple alerts to be subscribed to.
trigger	The value of the supplied arguments is assumed to be the names of housekeeping data items. The one exception to this is the "all" value, which instructs the MCCS to trigger on all data items specified in the "list" argument.
source	Particular source from which to retrieve items.
level	Minimum severity level (0-3) for alert/alarm messages: INFO(0), WARNING(1), ERROR(2), and FATAL(3). For example, selecting INFO will return INFO, WARNING, ERROR and FATAL alerts/alarms, but selecting ERROR will return just ERROR and FATAL alerts/alarms.

Examples:

```
24 subscribe list=fms_alarm_warning<CR>
33 subscribe list=all_alerts trigger=all <CR>
34 subscribe list=all_alarms trigger=all <CR>
43 subscribe list=all_alerts source=wvm trigger=all <CR>
53 subscribe list=all_alerts level=2 trigger=all <CR>
54 subscribe list=all_alarms source=fms level=2
    trigger=all <CR>
```

4.5.2 Alert/Alarm Format

An alert or alarm takes the following format:

<msg id> <respType> {<alert name> = <alert string>}

The quoted alert string takes the following format:

<severity> <sep> <source> <sep> <index> [<sep> <sound>]
[<sep> <status>] <sep> <alert text> <sep> <timestamp>
[<sep> <allowed roles>]

Table 10. Alert/Alarm Response Tokens

Token	Description
<alert string>	ASCII housekeeping data item alert string.
<alert name>	The AlertNode object name.
<severity>	Severity level of alert: FATAL, ERROR, WARNING, or INFO.
<sep>	Separator within the quoted alert/alarm string is the following three character sequence: single space, ASCII delete character (\x7F), single space.
<source>	Name of the source of the alert.
<index>	The index begins with “ID=” and the value supplied is the mnemonic ID of the alert.
<sound>	Name of a sound that is played for an audible alert and is displayed in parentheses.
<status>	The status field holds a "CLEARED", "CONFIRMED BY user", or “REISSUED *count* times” status within angle brackets.
<alert text>	Text message describing what is wrong, provides information, or asks an allowed user to take an action.
<timestamp>	The timestamp, which appears within square brackets, is YYYY MM DD hh.mm.ss.uuuuuu zzz, where " UT" is the only time zone (field “zzz”) currently supported.
<allowed roles>	The list of roles begins with “role=” and continues with either “all”, “none”, or a square-bracketed, blank-separated list of operator types. The supplied list details which operator types should confirm/enable/disable alert -- types that can change the datum.

Examples:

```
24 I fms_alarm_warning=" WARNING fms ID=FMS20 Correct
   course [2002 02 21 20:28:54.586468 UT] role=[si co ta
   director]"<LF>

33 I hdg_alert_info=" INFO hdg ID=HDG10 Heading Turner
   enabled [2002 02 21 20:27:44.486468 UT]"
   wvm_alert_warning=" WARNING wvm ID=WVM10 Static air
   temp too high [2002 02 21 20:38:54.586468 UT]"<LF>

34 I hdg_alarm_info="INFO hdg ID=HDG10 Heading Turner
   enabled [2002 02 21 20:27:44.486468 UT] role=[si co ta
   director]"<LF>

43 I wvm_alert_warning=" WARNING wvm ID=WVM30 Pressure alt
   too high [2002 02 21 20:28:54.586468 UT]"<LF>

53 I wvm_alert_error=" ERROR wvm ID=WVM10 Static air temp
   too high [2002 02 21 20:38:54.586468 UT]"<LF>

54 I fms_alarm_error=" ERROR fms ID=FMS30 Press altitude
   too high [2002 02 21 20:27:44.486468 UT] role=[si co ta
   director]"<LF>
```

The only difference between Alerts and Alarms is that the latter require confirmation - the user must acknowledge and/or dismiss it, thus forcing the user to pay some attention. In order to implement this a confirm command has been created.

4.5.3 Confirming Alarms

Confirming an alarm is performed in the following form:

<msg id> <source>.**confirm**
list = <value>
[**id** = <value>]
[**bool** = <value>]
[**response** = <value>]

Table 11. Alarm Confirm Command Keywords

Keyword	Description
confirm	Confirm alarm housekeeping data items in the supplied list.
list	Items to confirm. This argument can also be a bracketed list, permitting multiple alarms to be confirmed.
id	Mnemonic ID of alarm to confirm. If the id keyword is omitted from the command, then all alarms issued by the alert nodes specified in the list keyword will be confirmed.
bool	Boolean response to an alarm.
response	Textual response to an alarm.

Once MCCS receives this command the user's role is checked against a list of operator types. If the user is not allowed to change the datum, an error is returned, and otherwise the requested action occurs. In the case of alarms, an alert is sent out when the alarm is confirmed to notify any users who acknowledged the alarm and to close the alarm display.

Note that the confirm command must be prefixed with the name of the source that issued the alarm, which may be obtained from the <source> field in the alert string (see Table 10).

Examples:

```
24 hdg.confirm list=hdg_alarm_error id="HDG10"<CR>
26 wvm.confirm list=wvm_alarm_error id="WVM02"<CR>
```

4.5.4 Confirmed Alarm Responses

Confirm responses are of the following form:

<msg id> <respType> <keyword> = <confirm string>

The quoted confirm string takes the following format if confirmed by an allowed user:

<alert name> [ID=<ID>] confirmed by <user>

Else the confirm string is simply:

"Insufficient permission to confirm"

Table 12. Confirm Command Responses

Token	Description
<confirm string>	ASCII confirm status string returned with "message" keyword.
<alert name>	The AlertNode object name.
<ID>	The mnemonic ID of the alarm.
<user>	The full name of the user who confirmed the alarm.

Examples:

```
24: message="hdg_alarm_error ID=HDG10 confirmed by Jackie
    Davidson"<LF>
26 F message="Insufficient permission to confirm"<LF>
```

4.5.5 Disabling Alerts/Alarms

Disabling an alert or alarm is performed in the following form:

*<msg id> <source>.**disable list** = <value> [**id** = <value>]*

Table 13. Disabling Alert/Alarm Keywords

Keyword	*Description*
disable	*Disable the alert or alarm housekeeping data items in the supplied list from being issued.*
list	*Items to disable. This argument can also be a bracketed list, permitting multiple alarms to be disabled.*
id	*Mnemonic ID of alert to disable. If the id keyword is omitted from the command, then all alerts/alarms issued by the alert nodes specified in the list keyword will be disabled.*

Before a user can disable an alert, the user's role is checked against a list of operator types. If the user is not allowed to change the datum, an error is returned, and otherwise the requested action occurs. Please also note that the disable command must be prefixed with the name of the source that issues the alert/alarm (the name of the source can be obtained from the <source> field in the alert string (see Table 10)).

Examples:

```
23 hdg.disable list=hdg_alert_infoid=HDG10<CR>
26 wvm.disable list=wvm_alert_infoid=WVM02<CR>
33 fms.disable list=fms_alert_fatal<CR>
```

4.5.6 Disabled Alert/Alarm Responses

Disable responses are of the following form:

<msg id> <respType> <keyword> = <disable string>

The quoted disable string takes the following format if disabled by an allowed user:

<alert name> [ID=<ID>] disabled

Else the disable string is simply:

"Insufficient permission to disable"

However, when an alert or alarm cannot be disabled because its severity is too high to ignore, the quoted disable string will be:

"Cannot be disabled"

Table 14. ASCII SCL Disable Command Responses

Token	Description
<disable string>	ASCII disable status string returned with "message" keyword.
<alert name>	The AlertNode object name.
<ID>	The mnemonic ID of the alert or alarm.

Examples:

```
23 : message="hdg_alert_info disabled"<LF>
26 F message="Insufficient permission to disable"<LF>
33 F message="Cannot be disabled"<LF>
```

4.5.7 Enabling Alerts/Alarms

Enabling an alert or alarm is performed in the following form:

*<msg id> <source>.**enable list** = <value> [**id** = <value>]*

Table 15. Enabling Alert/Alarm Keywords

Keyword	Description
enable	Re-enable the alert or alarm housekeeping data items in the supplied list, allow it to resume issuing messages.
list	Items to enable. This argument can also be a bracketed list, permitting multiple alarms to be enabled.
Id	Mnemonic ID of alert to enable. If the id keyword is omitted from the command, then all alerts/alarms issued by the alert nodes specified in the list keyword will be enabled.

Before a user can enable an alert, the user's role is checked against a list of operator types. If the user is not allowed to change the datum, an error is returned, and otherwise the requested action occurs. Please also note that the enable command must be prefixed with the name of the source of the alert/alarm (the name of the source can be obtained from the <source> field in the alert string (see Table 10)).Examples:

```
43 hdg.enable list=hdg_alert_info id=HDG10<CR>
56 wvm.enable list=wvm_alert_info<CR>
```

4.5.8 Enabled Alert/Alarm Responses

Enable responses are of the following form:

<msg id> <respType> <keyword>=<enable string>

The quoted enable string takes the following format if enabled by an allowed user:

<alert name> [ID=<ID>] enabled

Else the enable string is simply:

"Insufficient permission to enable"

Table 16. ASCII SCL Enable Command Responses

Token	*Description*
<enable string>	*ASCII enable status string returned with "message" keyword.*
<alert name>	*The AlertNode object name.*
<ID>	*The mnemonic ID of the alert or alarm.*

Examples:

```
43 : message="hdg_alert_info ID=HDG10 enabled"<LF>
56 F message="Insufficient permsiion to enable"<LF>
```

4.6 MCCS Responsibilities

For commands that invoke processing internal to the MCCS, the maximum time from entry of a user command to return of the results will not exceed 20 milliseconds, given that the command length is less than 80 characters, the command has 2 keywords or less.

The MCCS shall provide to the SI a means of reporting errors in the interface (for example, a general error report mechanism).

4.7 Coordinate Systems

All information sent from the MCCS to the SI shall be in the default coordinate system for that data item unless requested otherwise by the use of arguments or qualifying attributes to an argument. Certain coordinate system conversions and transformations will be available to convert from the default coordinate systems used for a data item into one of several other appropriate coordinate systems. Most commands which take the name of a position as an argument allow the in-line definition of a new position with the specified name. The list of coordinates which are available for a given command are listed as arguments to the command. The list of coordinates which may be used in an in-line position definition are listed as the qualifying attributes for the position argument (e.g., pos, track, aoi, rof1, rof2, etc.) being defined. The conversions available for a given argument are listed as qualifying attributes to the argument. The list of key reference frames supported by the MCCS is given in Table 17 below (note that not all commands will support all reference frames). See Appendix A, sections **coord**, **ta_pos**, **sma**, and **nod**, as

well as the TA_MCCS_F ICD for the individual commands and their arguments. See section 3.3.2 for the SI data interface definition of the Science Instrument Reference Frame (SIRF) using data-definition XML files.

Table 17. Supported Reference Frames

Acronym	Name
ERF	Equatorial Reference Frame
EcRF	Ecliptic Reference Frame
GalRF	Galactic Reference Frame
SMARF	Secondary Mirror Assembly Reference Frame
TAICRF	TA Inner Cradle Reference Frame
TARF	Telescope Assembly Reference Frame
IRF	Inertial Reference Frame
WFIRF	Wide Field Imager Reference Frame
FFIRF	Fine Field Imager Reference Frame
FPIRF	Focal Plane Imager Reference Frame
SIRF	Science Instrument Reference Frame

4.8 Data Requirements

Table 18 describes data types and default data formats supported by the MCCS. Data element definitions are provided in Appendices A and B.

Table 18. Default SCL Data Formats

Value Type	Examples	Explanation (if any)
Integer	1234 -500	INT4, INT8
Real	12.34 1.234e-10	FLOAT4, FLOAT8
List	[posA posB] [56 89] [[0 0] [300.5 400.6]]	VECTOR16, VECTOR24, INVECTOR8, INVECTOR12 or a list of STRINGs, INTs, FLOATs, or VECTORs. See keywords in “ta_pos.pattern” for examples.
“true/false” option response	yes/no true/false on/off 0/1	BOOL4
Text string	“one two three four”	STRING A text string with any non-terminator character (including spaces) may be contained within double quotes. Most escape sequences from the C++ and Java conventions are also supported. Note: Any text within quotes is case sensitive.
Word	TRUE A9520 ThisIsAWord so_is_this	STRING A text string beginning with an alphabetic character containing any printable ASCII character except a blank, tab, or reserved

Value Type	Examples	Explanation (if any)
		character such as parenthesis or comma. ENUM When keyword/attribute values are taken from a list of word options.
Sexagesimal	Time: 12:13:14.5 RA & Dec: 12h13m14.5s –12d13m14s	MCCS converts these SEXA8 to FLOAT8. Can be used for time, RA, or Dec (respectively: use colons for time, hms for RA sidereal time, and dms for angles). Note: all SEXA8 values may be entered as FLOAT8 values as well.
Timestamp	2004 01 22 12:45:36.563454 UT <timestamp> = 2004_01_22_12_45_36.563454__UT	MCCS format "%ymd": gives year, then month, day, hours, minutes, seconds (to the microsecond) of "UT". <timestamp> in file name has a slightly different format as shown.

5. DEFINITIONS, ABBREVIATIONS, ACRONYMS

The following are acronyms unique to this document.

Abbreviation/Acronym	Description
<CR>	ASCII Carriage Return (a single byte containing the decimal value 13)
<CRLF>	ASCII Carriage Return, Line Feed (sequence of two bytes containing decimal values 13, then 10)
<EOT>	ASCII End Of Transmission (a single byte containing the value 4)
<LF>	ASCII Line Feed (a single byte containing decimal 10)
<SOH>	ASCII Start Of Header (a single byte containing the value 1)
ASCII	De-facto standard for representing 8-bit character data (American Standard Code for Information Interchange)
CDDS	Cavity Door Drive System
DNS	Domain Name Services
FFI	Fine Field Imager; SOFIA 1 degree field of view imager
FITS	Flexible Image Transport System; a digital file format commonly used to store astronomical images and data
FMS	Flight Management System; avionics system which provides aircraft route and other aircraft data
FPI	Focal Plane Imager; SOFIA 9 arcminute field of view imager
ICD	Interface Control Document
IRIG-B	Inter-Range Instrumentation Group - (format) B time distribution format
LAN	Local Area Network
MADS	Mission Audio Distribution Subsystem; SOFIA subsystem which provides audio communication between flight participants
MCCS	Mission Communications and Control System
NFS	Network File System
NTP	Network Time Protocol
OSS	Observatory Support Subsystem
PI	Principal Investigator
SATA	Type of bus for connecting computers to mass storage devices (Serial Advanced Technology Attachment)
SBC	Single Board Computer

SCL	SOFIA Command Language
SCL	SOFIA Command Language
SI	Science Instrument
SOFIA	Stratospheric Observatory for Infrared Astronomy
TA	Telescope Assembly
TAIPS	TA Imager Processing Subsystem
TASCU	TA Servo Control Unit
TCP/IP	Transmission Control Protocol/Internet Protocol
VME	Versa Module Eurocard; a common computer backplane bus
WFI	Wide Field Imager; SOFIA 6 degree field of view imager
XML	Extensible Markup Language; a flexible text format for creating structured computer files

APPENDIX A. SCL COMMANDS

The SCL Command Table includes the command and argument tables generated directly from the XML file definitions currently existing in the development software repository (CVS). It therefore only contains those commands that have been implemented or are currently in development. As more commands are determined to be required to meet the functional requirements specified for the MCCS, they will be added to the XML files to be included with the next release of this document.

SCL Command List

cdds	Cavity Door Drive System commands
commandable	List of commands all commandables understand
coord	List of coord commands
dither	List of dither commands
nod	Nod commands
rien	Science Instrument (SI) commands
session	Session commands
sma	Secondary Mirror Assembly (SMA) commands
ta	Generic Telescope Assembly (TA) commands (not subsystem specific)
ta_ffi	Fine Field Imager (FFI) commands
ta_fpi	FPI commands
ta_mcp	TA Master Control Processor (MCP) commands
ta_pos	TA Position commands
ta_sma	TA SMA commands
ta_state	TA State commands
ta_trc	TA Tracker Controller (TRC) commands
ta_tsc	TA Servo Control Unit (TASCU) commands
ta_wfi	Wide Field Imager commands

The column labelled “NeedDate” in the Command tables below tells whether a command has been implemented or when it is scheduled to be provided in the future. The table here shows NeedDate and associated values in chronological order (earliest first). All NeedDates with a value less than or equal to the value of current NeedDate have been implemented.

NeedDate	Value
CAE_INVALID, (Default unless specified)	0
CAE_IMMEDIATE	1
CAE_OD_BUILD	10
CAE_ENG_BUILD_3	13
CAE_ENG_BUILD_4	14
CAE_ENG_BUILD_5	15
CAE_SHORT_SCIENCE_A	20
CAE_SHORT_SCIENCE_B	22
CAE_BASIC_SCIENCE	30
CAE_EARLY_SCIENCE	40
CAE_IOC	60
CAE_FOC	80
CAE_FULL	99

For example, the NeedDate for the Short-Science 2 build of MCCS software is CAE_SHORT_SCIENCE_B, which has a value of 22. All commands with a NeedDate value less than or equal to 22 will be available in that build.

	A	B	C	D	E	F	G	H	I	J
1	**cdds** **List of Cavity Door Drive System (CDDS) commands**									
2	**Command**	**Description**	**NeedDate**	**Visibility**						
3	cdds.debug	Dumps the state of the proxy to syslog	CAE_FOC	PUBLIC						
4	**Command**	**Description**	**NeedDate**	**Visibility**						
5	cdds.set_aperture	Sets the door at a fixed position.	CAE_OD_BUILD	PUBLIC						
6	**Argument**	**Arg_Description**	**NeedDate**	**Form**	**Representation**	**units**	**LoLimit**	**HiLimit**	**ValueType**	**Visibility**
7	position	Specifies the new desired aperture position , in degrees. Turns off tracking if it is on.	CAE_INVALID	NUMBER	FLOAT8	degrees	24.15	57.35	SET	PUBLIC
8	**Command**	**Description**	**NeedDate**	**Visibility**						
9	cdds.track_aperture	Makes the door track the telescope, with an offset.	CAE_OD_BUILD	PUBLIC						
10	**Argument**	**Arg_Description**	**NeedDate**	**Form**	**Representation**	**units**	**LoLimit**	**HiLimit**	**ValueType**	**Visibility**
11	offset	Specifies the new desired aperture tracking offset, in degrees. Turns on tracking if it is off., (Default Type: FIXED, Value: 0.0)	CAE_INVALID	NUMBER	FLOAT8	degrees			SET	PUBLIC
12	**Command**	**Description**	**NeedDate**	**Visibility**						
13	cdds.door_trajectory	Sets the door trajectory from an ASCII file.	CAE_FOC	PUBLIC						
14	**Argument**	**Arg_Description**	**NeedDate**	**Form**	**Representation**	**units**	**LoLimit**	**HiLimit**	**ValueType**	**Visibility**
15	file	Specifies the filename. Absolute filenames are recommended.	CAE_INVALID	NUMBER	STRING				SET	PUBLIC
16	**Command**	**Description**	**NeedDate**	**Visibility**	**CmdVers**	**DestID**	**CmdID**			
17	cdds.set_archive_nsample	Set the archive nsample for a data group	CAE_IOC	PUBLIC	1	0	99999			
18	**Argument**	**Arg_Description**	**NeedDate**	**Form**	**Representation**	**units**	**LoLimit**	**HiLimit**	**ValueType**	**Visibility**
19	datagroup	Data group name, (Precision: N/A) , (Accuracy: N/A) , [ENUM: (1: urd_position) (2: urd_load) (3: urd_velocity) (4: lfd_position) (5: lfd_load) (6: lfd_velocity) (7: urd_seal_status) (8: urd_seal_vacuum_status) (9: urd_seal_valve_status) (10: urd_seal_supply_pressure) (11: urd_seal_stepped_down_pressure) (12: urd_seal_pressure) (13: urd_seal_vent_pressure) (14: aperture_limit_switches) (15: urd_seal_system_fault) (16: ifd_console_switch_setting) (17: ifd_enable_switch_setting)]	CAE_INVALID	ENUM	STRING	none	1	18	NONE	PUBLIC
20	nsample	archive n sample value, (Precision: N/A) , (Accuracy: N/A) , (Default Type: FIXED, Value: 1)	CAE_INVALID	NUMBER	UINT4	none	0	4294967295	NONE	PUBLIC
21	**cdds_sim** **List of Cavity Door Drive System (CDDS) Sim commands** **INTENTIONALLY OMITTED**									

	A	B	C	D	E	F	G	H	I	J
22	**commandable** **List of commands all commandables understand**									
23	**Command**	**Description**	**NeedDate**	**Visibility**						
24	commandable._subscribe	subscribe (internal) to HK data	CAE_OD_BUILD	PUBLIC						
25	**Argument**	**Arg_Description**	**NeedDate**	**Form**	**Representation**	**units**	**LoLimit**	**HiLimit**	**ValueType**	**Visibility**
26	desc	Indicates that data descriptions are required	CAE_INVALID	NUMBER	STRING	none			NONE	PUBLIC
27	list	items to retrieve	CAE_INVALID	NUMBER	STRING	none			GET	PUBLIC
28	**Command**	**Description**	**NeedDate**	**Visibility**						
29	commandable._get	get (internal) a one-time update of HK data	CAE_OD_BUILD	PUBLIC						
30	**Argument**	**Arg_Description**	**NeedDate**	**Form**	**Representation**	**units**	**LoLimit**	**HiLimit**	**ValueType**	**Visibility**
31	list	items to retrieve	CAE_INVALID	NUMBER	STRING	none			GET	PUBLIC
32	**Command**	**Description**	**NeedDate**	**Visibility**						
33	commandable._commands	Find out status of all master commands	CAE_OD_BUILD	PUBLIC						
34	**Command**	**Description**	**NeedDate**	**Visibility**						
35	commandable._data	Find out what data this Commandable understands	CAE_OD_BUILD	PUBLIC						
36	**Command**	**Description**	**NeedDate**	**Visibility**						
37	commandable.alive	Queries the application to see if it is alive	CAE_OD_BUILD	PUBLIC						
38	**Command**	**Description**	**NeedDate**	**Visibility**						
39	commandable.cancel	Cancel a particular command	CAE_OD_BUILD	PUBLIC						
40	**Argument**	**Arg_Description**	**NeedDate**	**Form**	**Representation**	**units**	**LoLimit**	**HiLimit**	**ValueType**	**Visibility**
41	cmdid	cmd ID to identify the command to cancel	CAE_INVALID	NUMBER	INT4	none			NONE	PUBLIC
42	sysid	sys ID to identify the command to cancel	CAE_INVALID	NUMBER	INT4	none			NONE	PUBLIC
43	**Command**	**Description**	**NeedDate**	**Visibility**						
44	commandable.disable	keep an alert or alarm from being issued	CAE_EARLY_SCIENCE	PUBLIC						
45	**Argument**	**Arg_Description**	**NeedDate**	**Form**	**Representation**	**units**	**LoLimit**	**HiLimit**	**ValueType**	**Visibility**
46	list	items to disable	CAE_INVALID	NUMBER	STRING	none			NONE	PUBLIC
47	id	Mnemonic ID of alarm to disable	CAE_INVALID	NUMBER	STRING	none			NONE	PUBLIC
48	**Command**	**Description**	**NeedDate**	**Visibility**						
49	commandable.enable	re-enable an alert or alarm, allow it to resume issuing messages	CAE_EARLY_SCIENCE	PUBLIC						
50	**Argument**	**Arg_Description**	**NeedDate**	**Form**	**Representation**	**units**	**LoLimit**	**HiLimit**	**ValueType**	**Visibility**
51	list	items to enable	CAE_INVALID	NUMBER	STRING	none			NONE	PUBLIC
52	id	Mnemonic ID of alarm to enable	CAE_INVALID	NUMBER	STRING	none			NONE	PUBLIC
53	**Command**	**Description**	**NeedDate**	**Visibility**						
54	commandable.confirm	acknowledge and dismiss an alarm	CAE_OD_BUILD	PUBLIC						
55	**Argument**	**Arg_Description**	**NeedDate**	**Form**	**Representation**	**units**	**LoLimit**	**HiLimit**	**ValueType**	**Visibility**
56	list	items to confirm	CAE_INVALID	NUMBER	STRING	none			NONE	PUBLIC
57	id	Mnemonic ID of alarm to confirm	CAE_INVALID	NUMBER	STRING	none			NONE	PUBLIC
58	bool	boolean response to an alarm	CAE_INVALID	NUMBER	STRING	none			NONE	PUBLIC
59	response	textual response to an alarm	CAE_INVALID	NUMBER	STRING	none			NONE	PUBLIC

	A	B	C	D	E	F	G	H	I	J
60	**Command**	**Description**	**NeedDate**	**Visibility**						
61	commandable.help	print brief information for available commands and/or data items	CAE_OD_BUILD	PUBLIC						
62	**Argument**	**Arg_Description**	**NeedDate**	**Form**	**Representation**	**units**	**LoLimit**	**HiLimit**	**ValueType**	**Visibility**
63	command	get help on a specific commandable command	CAE_INVALID	NUMBER	STRING	none			NONE	PUBLIC
64	argument	get help on a specific command argument	CAE_INVALID	NUMBER	STRING	none			NONE	PUBLIC
65	data_item	get help on a specific housekeeping data item	CAE_INVALID	NUMBER	STRING	none			NONE	PUBLIC
66	**Command**	**Description**	**NeedDate**	**Visibility**						
67	commandable.start_archive	Turn archive on and start archiving HK data	CAE_IOC	PUBLIC						
68	**Command**	**Description**	**NeedDate**	**Visibility**						
69	commandable.stop_archive	Turn archive off	CAE_IOC	PUBLIC						
70	**Command**	**Description**	**NeedDate**	**Visibility**						
71	commandable.pause_archive	Pause archiving HK data	CAE_IOC	PUBLIC						
72	**Command**	**Description**	**NeedDate**	**Visibility**						
73	commandable.resume_archive	Resume archiving HK data	CAE_IOC	PUBLIC						
74	**Command**	**Description**	**NeedDate**	**Visibility**						
75	commandable.set_bytes_archived_archive_nsample	Set the archive nsample for bytes archived HK data	CAE_IOC	PUBLIC						
76	**Argument**	**Arg_Description**	**NeedDate**	**Form**	**Representation**	**units**	**LoLimit**	**HiLimit**	**ValueType**	**Visibility**
77	datagroup	Data group name, (Precision: N/A) , (Accuracy: N/A) , [ENUM: (1: current_bytes_archived) (2: total_bytes_archived)]	CAE_INVALID	ENUM	STRING	none	0	1	NONE	PUBLIC
78	nsample	archive n sample value, (Precision: N/A) , (Accuracy: N/A) , (Default Type: FIXED, Value: 0)	CAE_INVALID	NUMBER	UINT4	none	0	4294967295	NONE	PUBLIC
79	**coord** **List of coord commands**									
80	**Command**	**Description**	**NeedDate**	**Visibility**						
81	coord.resume	Enables the application	CAE_FOC	PUBLIC						
82	**Command**	**Description**	**NeedDate**	**Visibility**						
83	coord.suspend	Suspends the application	CAE_FOC	PUBLIC						
84	**Command**	**Description**	**NeedDate**	**Visibility**						
85	coord.set	Set the value for a mode or parameter	CAE_ENG_BUILD_3	PUBLIC						
86	**Argument**	**Arg_Description**	**NeedDate**	**Form**	**Representation**	**units**	**LoLimit**	**HiLimit**	**ValueType**	**Visibility**
87	ANY	The keyword of this argument is the name of the item or array to set; the value supplied in this argument is the new value for the item or specified array element.	CAE_IMMEDIATE	NUMBER	STRING	N/A			INDEXED	PUBLIC

	A	B	C	D	E	F	G	H	I	J
88	**Command**	**Description**	**NeedDate**	**Visibility**						
89	coord.verbose	Enables debugging output	CAE_IMMEDIATE	PUBLIC						
90	**Command**	**Description**	**NeedDate**	**Visibility**						
91	coord.quiet	Suspends debugging output	CAE_ENG_BUILD_3	PUBLIC						
92	**Command**	**Description**	**NeedDate**	**Visibility**						
93	coord.position	Add a Position to the list of named objects	CAE_ENG_BUILD_3	PUBLIC						
94	**Argument**	**Arg_Description**	**NeedDate**	**Form**	**Representation**	**units**	**LoLimit**	**HiLimit**	**ValueType**	**Visibility**
95	name	Name for the new/modified Position	CAE_IMMEDIATE	NUMBER	STRING	N/A			POSITION	PUBLIC
96	new	Creating a new object?, (Default Type: FIXED, Value: yes) , [ENUM: (0: no) (1: yes)]	CAE_ENG_BUILD_3	ENUM	BOOL4	N/A			NONE	PUBLIC
97	action	What to do if new argument is wrong?, (Default Type: SETTABLE, Value: coord.position.action) , [ENUM: (-1: error) (0: ignore) (1: query)]	CAE_IMMEDIATE	ENUM	STRING	N/A			NONE	PUBLIC
98	**Command**	**Description**	**NeedDate**	**Visibility**						
99	coord.aoiset	Define a new AOI or AOI set	CAE_ENG_BUILD_5	PUBLIC						
100	**Argument**	**Arg_Description**	**NeedDate**	**Form**	**Representation**	**units**	**LoLimit**	**HiLimit**	**ValueType**	**Visibility**
101	name	Name to identify this AOI definition	CAE_INVALID	NUMBER	STRING	N/A			POSITION	PUBLIC
102	new	Creating a new object?, (Default Type: FIXED, Value: yes) , [ENUM: (0: no) (1: yes)]	CAE_IOC	ENUM	BOOL4	N/A			NONE	PUBLIC
103	action	What to do if new argument is wrong?, (Default Type: SETTABLE, Value: coord.aoiset.action) , [ENUM: (-1: error) (0: ignore) (1: query)]	CAE_INVALID	ENUM	STRING	N/A			NONE	PUBLIC
104	deletable	May be disabled without user confirmation?, (Default Type: FIXED, Value: yes) , [ENUM: (0: no) (1: yes)]	CAE_IOC	ENUM	BOOL4	N/A			NONE	PUBLIC
105	activate	Activate the AOI?, (Default Type: FIXED, Value: yes) , [ENUM: (0: no) (1: yes)]	CAE_IOC	ENUM	BOOL4	N/A			NONE	PUBLIC
106	binned	Define using binned pixels?, (Default Type: SETTABLE, Value: coord.aoiset.binned) , [ENUM: (0: current) (1: 1x1) (2: 2x2) (4: 4x4)]	CAE_INVALID	ENUM	STRING	N/A			NONE	PUBLIC
107	upper_left	Starting pixel of the AOI (supplied as [col row])	CAE_INVALID	NUMBER	VECTOR16	pixels			NONE	PUBLIC
108	center	Center pixel of the AOI (supplied as [col row])	CAE_INVALID	NUMBER	VECTOR16	pixels			NONE	PUBLIC
109	center_pos	Center of the AOI (supplied as a Position name)	CAE_IOC	NUMBER	STRING	N/A			POSITION	PUBLIC
110	camera	Imager to use for tracker AOI definition, [ENUM: (0: wfi) (1: ffi) (2: fpi)]	CAE_INVALID	ENUM	STRING	N/A			NONE	PUBLIC
111	radius	Half-width of a square AOI	CAE_IOC	NUMBER	FLOAT8	pixels	1	75	NONE	PUBLIC
112	width	Inclusive width of a rectangular AOI	CAE_INVALID	NUMBER	FLOAT8	pixels	3	150	NONE	PUBLIC
113	height	Inclusive height of a rectangular AOI	CAE_INVALID	NUMBER	FLOAT8	pixels	3	150	NONE	PUBLIC
114	lower_right	End pixel of the AOI (supplied as [col row])	CAE_IOC	NUMBER	VECTOR16	pixels			NONE	PUBLIC

	A	B	C	D	E	F	G	H	I	J
115	threshold	Lower limit for centroid calculations, (Default Type: SETTABLE_REQUIRED_ONCE, Value: coord.aoiset.threshold)	CAE_INVALID	NUMBER	FLOAT8	percent	0	100	NONE	PUBLIC
116	range_limit	Box size for centroid calculations, (Default Type: SETTABLE_REQUIRED_ONCE, Value: coord.aoiset.range_limit)	CAE_INVALID	NUMBER	FLOAT8	pixels	0	100	NONE	PUBLIC
117	calculation_type	Specify no, centroid, or limb calculations, (Default Type: FIXED, Value: centroid) , [ENUM: (0: none) (1: centroid) (2: limb)]	CAE_INVALID	ENUM	STRING	N/A			NONE	PUBLIC
118	enable_dark	Enable dark correction?, (Default Type: FIXED, Value: no) , [ENUM: (1: yes) (0: no)]	CAE_INVALID	ENUM	BOOL4	N/A			NONE	PUBLIC
119	enable_flat	Enable flat correction?, (Default Type: FIXED, Value: no) , [ENUM: (1: yes) (0: no)]	CAE_INVALID	ENUM	BOOL4	N/A			NONE	PUBLIC
120	enable_distortion	Enable distortion correction?, (Default Type: FIXED, Value: yes) , [ENUM: (0: no) (1: yes)]	CAE_INVALID	ENUM	BOOL4	N/A			NONE	PUBLIC
121	chop	Name of chop point if camera is FPI, (Default Type: FIXED, Value: no_chop)	CAE_IOC	NUMBER	STRING	N/A			NONE	PUBLIC
122	**Command**	**Description**	**NeedDate**	**Visibility**						
123	coord.rf	Add a RefFrame to the list of named objects	CAE_IOC	PUBLIC						
124	**Argument**	**Arg_Description**	**NeedDate**	**Form**	**Representation**	**units**	**LoLimit**	**HiLimit**	**ValueType**	**Visibility**
125	name	Name of the new Reference Frame	CAE_INVALID	NUMBER	STRING	N/A			NONE	PUBLIC
126	new	Creating a new object?, (Default Type: FIXED, Value: yes) , [ENUM: (0: no) (1: yes)]	CAE_INVALID	ENUM	BOOL4	N/A			NONE	PUBLIC
127	action	What to do if new argument is wrong?, (Default Type: SETTABLE, Value: coord.rf.action) , [ENUM: (-1: error) (0: ignore) (1: query)]	CAE_INVALID	ENUM	STRING	N/A			NONE	PUBLIC
128	base	Name and attributes of the RefFrame from which it is derived, [ENUM: (0: ERF) (1: TARF) (2: WFIRF) (3: FFIRF) (4: FPIRF) (5: SIRF) (6: EcRF) (7: GalRF) (8: SGLRF)]	CAE_INVALID	ENUM	STRING	N/A			NONE	PUBLIC
129	origin	Location of the (0,0) point in new spherical coordinates	CAE_INVALID	NUMBER	STRING	N/A			POSITION	PUBLIC
130	north_pole	Location of the (0,90) point in new spherical coordinates	CAE_INVALID	NUMBER	STRING	N/A			POSITION	PUBLIC
131	south_pole	Location of the (0,-90) point in new spherical coordinates	CAE_INVALID	NUMBER	STRING	N/A			POSITION	PUBLIC
132	rotation	Angle between new meridian and old polar vector	CAE_INVALID	NUMBER	FLOAT8	degrees			SET	PUBLIC
133	longitude	Name of the new longitude coordinate, (Default Type: CALCULATED, Value:)	CAE_INVALID	NUMBER	STRING	N/A			NONE	PUBLIC
134	long_units	Units for the new longitude coordinate, (Default Type: FIXED, Value: degrees)	CAE_INVALID	NUMBER	STRING	N/A			NONE	PUBLIC
135	latitude	Name of the new latitude coordinate, (Default Type: CALCULATED, Value:)	CAE_INVALID	NUMBER	STRING	N/A			NONE	PUBLIC
136	lat_units	Units for the new latitude coordinate, (Default Type: FIXED, Value: degrees)	CAE_INVALID	NUMBER	STRING	N/A			NONE	PUBLIC

	A	B	C	D	E	F	G	H	I	J
137	polar	Is the new latitude coordinate, polar?, (Default Type: FIXED, Value: 0) , [ENUM: (0: false) (1: true)]	CAE_INVALID	ENUM	BOOL4	N/A			NONE	PUBLIC
138	position_angle	Name of the new position angle coordinate, (Default Type: CALCULATED, Value:)	CAE_INVALID	NUMBER	STRING	N/A			NONE	PUBLIC
139	pa_units	Units for the new position angle coordinate, (Default Type: FIXED, Value: degrees)	CAE_INVALID	NUMBER	STRING	N/A			NONE	PUBLIC
140	first	Name of the first Cartesian coordinate, (Default Type: CALCULATED, Value:)	CAE_INVALID	NUMBER	STRING	N/A			NONE	PUBLIC
141	second	Name of the second Cartesian coordinate, (Default Type: CALCULATED, Value:)	CAE_INVALID	NUMBER	STRING	N/A			NONE	PUBLIC
142	third	Name of the third Cartesian coordinate, (Default Type: CALCULATED, Value:)	CAE_INVALID	NUMBER	STRING	N/A			NONE	PUBLIC
143	**Command**	**Description**	**NeedDate**	**Visibility**						
144	coord.list	Output a list of named objects	CAE_OD_BUILD	PUBLIC						
145	**Argument**	**Arg_Description**	**NeedDate**	**Form**	**Representation**	**units**	**LoLimit**	**HiLimit**	**ValueType**	**Visibility**
146	name	Name of objects which the user wishes listed	CAE_INVALID	NUMBER	STRING	N/A			NONE	PUBLIC
147	type	Kind of objects which the user wishes listed, [ENUM: (0x000001: position) (0x000003: aoi) (0x080003: aoiset) (0x000007: ta_aoi) (0x000007: taaoi) (0x000010: rf) (0x000300: offsets) (0x001000: chops) (0x002001: beams) (0x082000: nodsets) (0x000009: guide) (0x000009: guide_star)]	CAE_INVALID	ENUM	STRING	N/A			NONE	PUBLIC
148	sorted_by	Sort by index or name, (Default Type: CALCULATED, Value:) , [ENUM: (-1: index) (-1: array) (1: alpha)]	CAE_INVALID	ENUM	STRING	N/A			NONE	PUBLIC
149	full	Full or brief output, [ENUM: (0: no) (1: yes)]	CAE_INVALID	ENUM	BOOL4	N/A			NONE	PUBLIC
150	**Command**	**Description**	**NeedDate**	**Visibility**						
151	coord.delete	Delete a named object (Position, RefFrame, etc.)	CAE_ENG_BUILD_3	PUBLIC						
152	**Argument**	**Arg_Description**	**NeedDate**	**Form**	**Representation**	**units**	**LoLimit**	**HiLimit**	**ValueType**	**Visibility**
153	name	Object or objects to delete	CAE_INVALID	NUMBER	STRING	N/A			NONE	PUBLIC
154	action	Confirm the deletion?, (Default Type: SETTABLE, Value: coord.delete.action) , [ENUM: (0: ignore) (1: query)]	CAE_INVALID	ENUM	STRING	N/A			NONE	PUBLIC
155	**Command**	**Description**	**NeedDate**	**Visibility**						
156	coord.delta	Calculate the offset between two Positions	CAE_EARLY_SCIENCE	PUBLIC						
157	**Argument**	**Arg_Description**	**NeedDate**	**Form**	**Representation**	**units**	**LoLimit**	**HiLimit**	**ValueType**	**Visibility**
158	from	Position the offset is from	CAE_INVALID	NUMBER	STRING	N/A			POSITION	PUBLIC
159	to	Position the offset is to	CAE_INVALID	NUMBER	STRING	N/A			POSITION	PUBLIC
160	coord_sys	Coordinate system for output, [ENUM: (0: IRF) (1: TARF) (2: TAICRF) (3: ERF) (4: WFIRF) (5: FFIRF) (6: FPIRF) (7: SIRF)]	CAE_INVALID	ENUM	STRING	N/A			NONE	PUBLIC
161	save_as	Name to save the result under	CAE_INVALID	NUMBER	STRING	N/A			NONE	PUBLIC

	A	B	C	D	E	F	G	H	I	J
162	new	Creating a new object?, (Default Type: FIXED, Value: yes) , [ENUM: (0: no) (1: yes)]	CAE_INVALID	ENUM	BOOL4	N/A			NONE	PUBLIC
163	action	What to do if new argument is wrong?, (Default Type: SETTABLE, Value: coord.delta.action) , [ENUM: (-1: error) (0: ignore) (1: query)]	CAE_INVALID	ENUM	STRING	N/A			NONE	PUBLIC
164	**Command**	**Description**	**NeedDate**	**Visibility**						
165	coord.calculate	Calculate the quaternion equivalent	CAE_EARLY_SCIENCE	PUBLIC						
166	**Argument**	**Arg_Description**	**NeedDate**	**Form**	**Representation**	**units**	**LoLimit**	**HiLimit**	**ValueType**	**Visibility**
167	position	Position to be converted	CAE_INVALID	NUMBER	STRING	N/A			POSITION	PUBLIC
168	quat	Quaternion to be converted	CAE_INVALID	NUMBER	UQUAT32	N/A			NONE	PUBLIC
169	ra	RA for the target Position	CAE_INVALID	NUMBER	SEXA8	sidereal hours			SET	PUBLIC
170	dec	Declination for the target Position	CAE_INVALID	NUMBER	SEXA8	degrees			SET	PUBLIC
171	vpa	Position angle for the target Position, (Default Type: CALCULATED, Value:)	CAE_INVALID	NUMBER	SEXA8	degrees			SET	PUBLIC
172	from	Reference Frame to rotate from, (Default Type: CALCULATED, Value:) , [ENUM: (0: ERF) (1: TARF) (2: WFIRF) (3: FFIRF) (4: FPIRF) (5: SIRF) (6: EcRF) (7: GalRF) (8: SGLRF)]	CAE_INVALID	ENUM	STRING	N/A			NONE	PUBLIC
173	to	Reference Frame to rotate to, (Default Type: FIXED, Value: TARF) , [ENUM: (0: ERF) (1: TARF) (2: WFIRF) (3: FFIRF) (4: FPIRF) (5: SIRF) (6: EcRF) (7: GalRF) (8: SGLRF)]	CAE_INVALID	ENUM	STRING	N/A			NONE	PUBLIC
174	**Command**	**Description**	**NeedDate**	**Visibility**						
175	coord.convert	Get the equivalent Position in another reference frame	CAE_SHORT_SCIENCE_B	PUBLIC						
176	**Argument**	**Arg_Description**	**NeedDate**	**Form**	**Representation**	**units**	**LoLimit**	**HiLimit**	**ValueType**	**Visibility**
177	position	Position to be converted	CAE_INVALID	NUMBER	STRING	N/A			POSITION	PUBLIC
178	from	Reference Frame to rotate from, (Default Type: CALCULATED, Value:) , [ENUM: (0: ERF) (1: TARF) (2: WFIRF) (3: FFIRF) (4: FPIRF) (5: SIRF) (6: EcRF) (7: GalRF) (8: SGLRF)]	CAE_INVALID	ENUM	STRING	N/A			NONE	PUBLIC
179	to	Reference Frame or coordinate system to rotate to, [ENUM: (0: ERF) (1: TARF) (2: WFIRF) (3: FFIRF) (4: FPIRF) (5: SIRF) (6: EcRF) (7: GalRF) (8: SGLRF)]	CAE_INVALID	ENUM	STRING	N/A			NONE	PUBLIC
180	save_as	Name to save the result under	CAE_INVALID	NUMBER	STRING	N/A			NONE	PUBLIC
181	**Command**	**Description**	**NeedDate**	**Visibility**						
182	coord.gyro_watch	Start watching for gyro drift	CAE_EARLY_SCIENCE	PUBLIC						
183	**Argument**	**Arg_Description**	**NeedDate**	**Form**	**Representation**	**units**	**LoLimit**	**HiLimit**	**ValueType**	**Visibility**
184	interval	Time between periodic watch points	CAE_INVALID	NUMBER	FLOAT8	seconds	0.02	86400	SET	PUBLIC
185	repeat	Number of intervals to take data	CAE_INVALID	NUMBER	INT4	unity	1		NONE	PUBLIC
186	**Command**	**Description**	**NeedDate**	**Visibility**						
187	coord.gyro_done	Finish watching for gyro drift	CAE_EARLY_SCIENCE	PUBLIC						
188	**Command**	**Description**	**NeedDate**	**Visibility**						
189	coord.instrument	Instrument initialization and set-up	CAE_ENG_BUILD_3	PUBLIC						

	A	B	C	D	E	F	G	H	I	J
190	**Argument**	**Arg_Description**	**NeedDate**	**Form**	**Representation**	**units**	**LoLimit**	**HiLimit**	**ValueType**	**Visibility**
191	name	Login name for the SI user (without _si)	CAE_INVALID	NUMBER	STRING	N/A			NONE	PUBLIC
192	**Command**	**Description**	**NeedDate**	**Visibility**						
193	coord.init	Initialize ERF to IRF calibrations	CAE_ENG_BUILD_3	PUBLIC						
194	**Command**	**Description**	**NeedDate**	**Visibility**						
195	coord.correct	Update ERF to IRF calibrations	CAE_ENG_BUILD_4	PUBLIC						
196	**Argument**	**Arg_Description**	**NeedDate**	**Form**	**Representation**	**units**	**LoLimit**	**HiLimit**	**ValueType**	**Visibility**
197	old_ra	Uncorrected celestial longitude	CAE_IOC	NUMBER	SEXA8	sidereal hours			SET	PUBLIC
198	old_dec	Uncorrected celestial latitude	CAE_IOC	NUMBER	SEXA8	degrees			SET	PUBLIC
199	old_vpa	Uncorrected position angle	CAE_IOC	NUMBER	FLOAT8	degrees			SET	PUBLIC
200	position	Known location, to be fixed	CAE_INVALID	NUMBER	STRING	N/A			POSITION	PUBLIC
201	file	Pixy output file	CAE_FOC	NUMBER	STRING	N/A			NONE	PUBLIC
202	offset	Named offset for the correction	CAE_IOC	NUMBER	STRING	N/A			OFFSET	PUBLIC
203	equinox	Equinox date for the points, (Default Type: FIXED, Value: j2000)	CAE_FULL	NUMBER	STRING	julian years			NONE	PUBLIC
204	ra	Actual RA for the specified Position	CAE_INVALID	NUMBER	SEXA8	sidereal hours			SET	PUBLIC
205	dec	Actual declination for the specified Position	CAE_INVALID	NUMBER	SEXA8	degrees			SET	PUBLIC
206	vpa	Actual position angle for the specified Position, (Default Type: CALCULATED, Value:)	CAE_ENG_BUILD_4	NUMBER	SEXA8	degrees			SET	PUBLIC
207	**Command**	**Description**	**NeedDate**	**Visibility**	**CmdVers**	**DestID**	**CmdID**			
208	coord.set_archive_nsample	Set the archive nsample for a data group	CAE_EARLY_SCIENCE	PUBLIC	1	0	99999			
209	**Argument**	**Arg_Description**	**NeedDate**	**Form**	**Representation**	**units**	**LoLimit**	**HiLimit**	**ValueType**	**Visibility**
210	datagroup	Data group name, (Precision: N/A) , (Accuracy: N/A) , [ENUM: (1: aoa) (2: drift_axis) (3: lst) (4: drift_rate) (5: aoi1.name) (6: aoi1.erf) (7: aoi2.name) (8: aoi2.erf) (9: aoi3.name) (10: aoi3.erf) (11: aoi4.name) (12: aoi4.erf) (13: aoi5.name) (14: aoi5.erf) (15: aoi6.name) (16: aoi6.erf) (17: aoi7.name) (18: aoi7.erf) (19: aoi8.name) (20: aoi8.erf)]	CAE_INVALID	ENUM	STRING	none	1	13	NONE	PUBLIC
211	nsample	archive n sample value, (Precision: N/A) , (Accuracy: N/A) , (Default Type: FIXED, Value: 1)	CAE_INVALID	NUMBER	UINT4	none	0	4294967295	NONE	PUBLIC
212	**dither** **List of dither commands**									
213	**Command**	**Description**	**NeedDate**	**Visibility**						
214	dither.resume	Enables the application	CAE_FOC	PUBLIC						
215	**Command**	**Description**	**NeedDate**	**Visibility**						
216	dither.suspend	Suspends the application	CAE_FOC	PUBLIC						
217	**Command**	**Description**	**NeedDate**	**Visibility**						

	A	B	C	D	E	F	G	H	I	J
218	dither.set	Set the value for a mode or parameter	CAE_ENG_BUILD_3	PUBLIC						
219	**Argument**	**Arg_Description**	**NeedDate**	**Form**	**Representation**	**units**	**LoLimit**	**HiLimit**	**ValueType**	**Visibility**
220	ANY	The keyword of this argument is the name of the item or array to set; the value supplied in this argument is the new value for the item or specified array element.	CAE_INVALID	NUMBER	STRING	N/A			INDEXED	PUBLIC
221	**Command**	**Description**	**NeedDate**	**Visibility**						
222	dither.verbose	Enables debugging output	CAE_IMMEDIATE	PUBLIC						
223	**Command**	**Description**	**NeedDate**	**Visibility**						
224	dither.quiet	Suspends debugging output	CAE_IMMEDIATE	PUBLIC						
225	**Command**	**Description**	**NeedDate**	**Visibility**						
226	dither.define	Define a new dither-set	CAE_ENG_BUILD_3	PUBLIC						
227	**Argument**	**Arg_Description**	**NeedDate**	**Form**	**Representation**	**units**	**LoLimit**	**HiLimit**	**ValueType**	**Visibility**
228	pos	One or more beam positions starting a dither set	CAE_INVALID	NUMBER	STRING	N/A			POSITION	PUBLIC
229	**Command**	**Description**	**NeedDate**	**Visibility**						
230	dither.insert	Add beam positions to a defined dither-set	CAE_SHORT_SCIENCE_B	PUBLIC						
231	**Argument**	**Arg_Description**	**NeedDate**	**Form**	**Representation**	**units**	**LoLimit**	**HiLimit**	**ValueType**	**Visibility**
232	pos	One or more beam positions to add to a dither set	CAE_INVALID	NUMBER	STRING	N/A			POSITION	PUBLIC
233	before	One or more beam positions to add to a dither set	CAE_INVALID	NUMBER	STRING	N/A			POSITION	PUBLIC
234	**Command**	**Description**	**NeedDate**	**Visibility**						
235	dither.goto	Go to a beam position other than the next	CAE_ENG_BUILD_3	PUBLIC						
236	**Argument**	**Arg_Description**	**NeedDate**	**Form**	**Representation**	**units**	**LoLimit**	**HiLimit**	**ValueType**	**Visibility**
237	pos	One target beam position to move to	CAE_INVALID	NUMBER	STRING	N/A			NONE	PUBLIC
238	**Command**	**Description**	**NeedDate**	**Visibility**						
239	dither.next	Go to the next beam position (dither)	CAE_ENG_BUILD_3	PUBLIC						
240	**Command**	**Description**	**NeedDate**	**Visibility**						
241	dither.remove	Enables the application	CAE_SHORT_SCIENCE_A	PUBLIC						
242	**Argument**	**Arg_Description**	**NeedDate**	**Form**	**Representation**	**units**	**LoLimit**	**HiLimit**	**ValueType**	**Visibility**
243	pos	Removes specified dither positions from list, if they all exist	CAE_INVALID	NUMBER	STRING	N/A			NONE	PUBLIC
244	**Command**	**Description**	**NeedDate**	**Visibility**						
245	dither.rotate	Rotates the dither set about the designated boresight	CAE_SHORT_SCIENCE_A	PUBLIC						
246	angle	desired rotation angle	CAE_INVALID	NUMBER	FLOAT8	degrees			NONE	PUBLIC
247	**dom** **List of generic domain application commands** **INTENTIONALLY OMITTED**									
248	**flitecam** **List of FLITECAM commands** **INTENTIONALLY OMITTED**									

	A	B	C	D	E	F	G	H	I	J
249	**fms** **List of FMS commands** **INTENTIONALLY OMITTED**									
250	**forcast** **List of FORCAST commands** **INTENTIONALLY OMITTED**									
251	**fpitest** **List of ??? commands** **INTENTIONALLY OMITTED**									
252	**great** **List of GREAT commands** **INTENTIONALLY OMITTED**									
253	**hawc** **List of HAWC commands** **INTENTIONALLY OMITTED**									
254	**hipo** **List of HIPO commands** **INTENTIONALLY OMITTED**									
255	**hipotest** **List of HIPO test commands** **INTENTIONALLY OMITTED**									
256	**nod** **List of nod commands**									
257	**Command**	**Description**	**NeedDate**	**Visibility**						
258	nod.resume	Enables the application	CAE_FOC	PUBLIC						
259	**Command**	**Description**	**NeedDate**	**Visibility**						
260	nod.suspend	Suspends the application	CAE_FOC	PUBLIC						
261	**Command**	**Description**	**NeedDate**	**Visibility**						
262	nod.set	Set the value for a mode or parameter	CAE_ENG_BUILD_3	PUBLIC						
263	**Argument**	**Arg_Description**	**NeedDate**	**Form**	**Representation**	**units**	**LoLimit**	**HiLimit**	**ValueType**	**Visibility**
264	ANY	The keyword of this argument is the name of the item or array to set; the value supplied in this argument is the new value for the item or specified array element.	CAE_INVALID	NUMBER	STRING	N/A			INDEXED	PUBLIC
265	**Command**	**Description**	**NeedDate**	**Visibility**						
266	nod.verbose	Enables debugging output	CAE_IMMEDIATE	PUBLIC						
267	**Command**	**Description**	**NeedDate**	**Visibility**						
268	nod.quiet	Suspends debugging output	CAE_IMMEDIATE	PUBLIC						
269	**Command**	**Description**	**NeedDate**	**Visibility**						
270	nod.define	Define a set of nod Beams	CAE_SHORT_SCIENCE_A	PUBLIC						

	A	B	C	D	E	F	G	H	I	J
271	**Argument**	**Arg_Description**	**NeedDate**	**Form**	**Representation**	**units**	**LoLimit**	**HiLimit**	**ValueType**	**Visibility**
272	coord_sys	coordinate system used to define the nod set, (Default Type: FIXED, Value: tarf) , [ENUM: (1: tarf) (2: erf) (3: wfirf) (4: ffirf) (5: fpirf) (6: sirf)]	CAE_IMMEDIATE	ENUM	STRING	N/A			NONE	PUBLIC
273	profile	Number of positions within the nod set, (Default Type: FIXED, Value: 2)	CAE_IMMEDIATE	NUMBER	UINT4	N/A	2	3	NONE	PUBLIC
274	pos_angle	Angle between the nod axis and positive axis, (Default Type: SETTABLE, Value: nod.define.pos_angle)	CAE_IMMEDIATE	NUMBER	FLOAT8	degrees			SET	PUBLIC
275	amplitude	Nodding amplitude, (Default Type: SETTABLE, Value: nod.define.amplitude)	CAE_IMMEDIATE	NUMBER	FLOAT8	arcseconds			SET	PUBLIC
276	amp2	Secondary nodding amplitude, (Default Type: SETTABLE, Value: nod.define.amp2)	CAE_IMMEDIATE	NUMBER	FLOAT8	arcseconds			SET	PUBLIC
277	track_pos_a	Position to use for tracking when at A, (Default Type: FIXED, Value:)	CAE_IMMEDIATE	NUMBER	STRING	N/A			NONE	PUBLIC
278	track_pos_b	Position to use for tracking when at B, (Default Type: FIXED, Value:)	CAE_IMMEDIATE	NUMBER	STRING	N/A			NONE	PUBLIC
279	track_pos_x	Position to use for tracking when at X, (Default Type: FIXED, Value:)	CAE_IMMEDIATE	NUMBER	STRING	N/A			NONE	PUBLIC
280	**Command**	**Description**	**NeedDate**	**Visibility**						
281	nod.goto	Go to a nod position directly	CAE_ENG_BUILD_3	PUBLIC						
282	**Argument**	**Arg_Description**	**NeedDate**	**Form**	**Representation**	**units**	**LoLimit**	**HiLimit**	**ValueType**	**Visibility**
283	pos	One target nod position to move to	CAE_INVALID	NUMBER	STRING	N/A			NONE	PUBLIC
284	**Command**	**Description**	**NeedDate**	**Visibility**						
285	nod.next	Go to the next beam position (nod)	CAE_ENG_BUILD_3	PUBLIC						
286	**Command**	**Description**	**NeedDate**	**Visibility**						
287	nod.correct	Adjusts a nod beam position	CAE_SHORT_SCIENCE_A	PUBLIC						
288	**Argument**	**Arg_Description**	**NeedDate**	**Form**	**Representation**	**units**	**LoLimit**	**HiLimit**	**ValueType**	**Visibility**
289	beam	Beam position to be corrected	CAE_INVALID	NUMBER	STRING	N/A			NONE	PUBLIC
290	pos	Name of an AOI to center the beam on	CAE_INVALID	NUMBER	STRING	N/A			NONE	PUBLIC
291	**parser_tester** **List of parser tester commands** **INTENTIONALLY OMITTED**									
292	**rien** **List of Science Instrument (SI) commands**									
293	**Command**	**Description**	**NeedDate**	**Visibility**						
294	rien.resume	Enables the application	CAE_FOC	PUBLIC						
295	**Command**	**Description**	**NeedDate**	**Visibility**						
296	rien.suspend	Suspends the application	CAE_FOC	PUBLIC						
297	**Command**	**Description**	**NeedDate**	**Visibility**						
298	rien.set	Set the value for a mode or parameter	CAE_SHORT_SCIENCE_A	PUBLIC						
299	**Argument**	**Arg_Description**	**NeedDate**	**Form**	**Representation**	**units**	**LoLimit**	**HiLimit**	**ValueType**	**Visibility**

	A	B	C	D	E	F	G	H	I	J
300	ANY	The keyword of this argument is the name of the item or array to set; the value supplied in this argument is the new value for the item or specified array element.	CAE_INVALID	NUMBER	STRING	N/A			INDEXED	PUBLIC
301	**Command**	**Description**	**NeedDate**	**Visibility**						
302	rien.verbose	Enables debugging output	CAE_FOC	PUBLIC						
303	**Command**	**Description**	**NeedDate**	**Visibility**						
304	rien.quiet	Suspends debugging output	CAE_FOC	PUBLIC						
305	**Command**	**Description**	**NeedDate**	**Visibility**						
306	rien.si_boresight	Update the position of the SI Boresight	CAE_ENG_BUILD_3	PUBLIC						
307	**Command**	**Description**	**NeedDate**	**Visibility**						
308	rien.mode	Changes the current instrument mode	CAE_SHORT_SCIENCE_A	PUBLIC						
309	**Argument**	**Arg_Description**	**NeedDate**	**Form**	**Representation**	**units**	**LoLimit**	**HiLimit**	**ValueType**	**Visibility**
310	current	New operating mode, (Default Type: SETTABLE, Value: rien.si_config.current_mode)	CAE_INVALID	NUMBER	STRING				NONE	PUBLIC
311	change_focus	Refocussing actions, (Default Type: FIXED, Value: neither) , [ENUM: (0: neither) (1: sma) (2: fpi) (3: both)]	CAE_ENG_BUILD_3	ENUM	STRING				NONE	PUBLIC
312	**Command**	**Description**	**NeedDate**	**Visibility**						
313	rien.si_align	Update the Science Instrument alignment	CAE_BASIC_SCIENCE	PUBLIC						
314	**Command**	**Description**	**NeedDate**	**Visibility**						
315	rien.sibs_change	Change the Science Instrument boresight	CAE_SHORT_SCIENCE_A	PUBLIC						
316	**Argument**	**Arg_Description**	**NeedDate**	**Form**	**Representation**	**units**	**LoLimit**	**HiLimit**	**ValueType**	**Visibility**
317	xsi	SI pixel location of boresight (abscissa)	CAE_INVALID	NUMBER	FLOAT8	pixels			NONE	PUBLIC
318	ysi	SI pixel location of boresight (ordinate)	CAE_INVALID	NUMBER	FLOAT8	pixels			NONE	PUBLIC
319	move	Look at the same sky location?, (Default Type: FIXED, Value: yes) , [ENUM: (0: no) (1: yes)]	CAE_INVALID	ENUM	BOOL4	N/A			NONE	PUBLIC
320	**Command**	**Description**	**NeedDate**	**Visibility**						
321	rien.save	Save instrument values	CAE_IOC	PUBLIC						
322	**Command**	**Description**	**NeedDate**	**Visibility**						
323	rien.restore	Read an XML file containing current instrument parameters	CAE_IOC	PUBLIC						
324	**Argument**	**Arg_Description**	**NeedDate**	**Form**	**Representation**	**units**	**LoLimit**	**HiLimit**	**ValueType**	**Visibility**
325	file	File name or path, (Default Type: CALCULATED, Value: rien.save.file)	CAE_INVALID	NUMBER	STRING				NONE	PUBLIC
326	list	modes to be changed	CAE_INVALID	NUMBER	STRING				NONE	PUBLIC
327	**session** **List of session commands**									
328	**Command**	**Description**	**NeedDate**	**Visibility**						
329	session.login	Login to the MCS	CAE_OD_BUILD	PUBLIC						
330	**Argument**	**Arg_Description**	**NeedDate**	**Form**	**Representation**	**units**	**LoLimit**	**HiLimit**	**ValueType**	**Visibility**
331	user	User of the MCS	CAE_INVALID	NUMBER	STRING	N/A			NONE	PUBLIC

	A	B	C	D	E	F	G	H	I	J
332	role	Role being played by this user	CAE_INVALID	NUMBER	STRING	N/A			NONE	PUBLIC
333	port	Port number to connect to client at (optional)	CAE_INVALID	NUMBER	INT4	N/A			NONE	PUBLIC
334	password	Associated authentication info (password)	CAE_INVALID	NUMBER	STRING	N/A			NONE	PUBLIC
335	autosend	Flag indicating whether to send the SCL in the [user].xml upon login, (Default Type: FIXED, Value: yes) , [ENUM: (0: no) (1: yes)]	CAE_INVALID	ENUM	BOOL4	N/A			NONE	PUBLIC
336	**Command**	**Description**	**NeedDate**	**Visibility**						
337	session.alias	Create an alias	CAE_IOC	PUBLIC						
338	**Argument**	**Arg_Description**	**NeedDate**	**Form**	**Representation**	**units**	**LoLimit**	**HiLimit**	**ValueType**	**Visibility**
339	ANY	Item to alias	CAE_INVALID	NUMBER	STRING	N/A			NONE	PUBLIC
340	**Command**	**Description**	**NeedDate**	**Visibility**						
341	session.unalias	undo a previously created alias	CAE_IOC	PUBLIC						
342	**Argument**	**Arg_Description**	**NeedDate**	**Form**	**Representation**	**units**	**LoLimit**	**HiLimit**	**ValueType**	**Visibility**
343	token	Item to unalias	CAE_INVALID	NUMBER	STRING	N/A			NONE	PUBLIC
344	**Command**	**Description**	**NeedDate**	**Visibility**						
345	session.logout	Logout from the MCS, no arguments required	CAE_OD_BUILD	PUBLIC						
346	**Command**	**Description**	**NeedDate**	**Visibility**						
347	session.set	set the value for a housekeeping parameter	CAE_OD_BUILD	PUBLIC						
348	**Argument**	**Arg_Description**	**NeedDate**	**Form**	**Representation**	**units**	**LoLimit**	**HiLimit**	**ValueType**	**Visibility**
349	ANY	item to set	CAE_INVALID	NUMBER	STRING	N/A			SET	PUBLIC
350	**Command**	**Description**	**NeedDate**	**Visibility**						
351	session.revision	Report MCS revision information	CAE_IMMEDIATE	PUBLIC						
352	**Command**	**Description**	**NeedDate**	**Visibility**						
353	session.get	retrieve one or more housekeeping values	CAE_OD_BUILD	PUBLIC						
354	**Argument**	**Arg_Description**	**NeedDate**	**Form**	**Representation**	**units**	**LoLimit**	**HiLimit**	**ValueType**	**Visibility**
355	list	items to retrieve	CAE_INVALID	NUMBER	STRING	N/A			GET	PUBLIC
356	**Command**	**Description**	**NeedDate**	**Visibility**						
357	session.subscribe	subscribe to housekeeping values	CAE_OD_BUILD	PUBLIC						
358	**Argument**	**Arg_Description**	**NeedDate**	**Form**	**Representation**	**units**	**LoLimit**	**HiLimit**	**ValueType**	**Visibility**
359	list	items to retrieve	CAE_INVALID	NUMBER	STRING	N/A			GET	PUBLIC
360	interval	Amount of time between each display	CAE_INVALID	NUMBER	FLOAT4	seconds	0.00001		SET	PUBLIC
361	sample	Take every 'sample_intvl'th sample, (Default Type: FIXED, Value: 1)	CAE_INVALID	NUMBER	INT4	N/A	1		NONE	PUBLIC
362	trigger	Item used to determine when to take the next sample, (Default Type: CALCULATED, Value:)	CAE_INVALID	NUMBER	STRING	N/A			NONE	PUBLIC
363	n_times	Number of times to display, (Default Type: CALCULATED, Value:)	CAE_INVALID	NUMBER	INT4	N/A	1		NONE	PUBLIC
364	duration	amount of time to keep displaying	CAE_INVALID	NUMBER	FLOAT4	seconds	0.00001		SET	PUBLIC
365	file	File used for logging, output goes to specified file	CAE_INVALID	NUMBER	STRING	N/A			NONE	PUBLIC
366	format	Format to output the log file in, (Default Type: CALCULATED, Value:) , [ENUM: (5: fits) (2: ascii) (3: table) (6: mcs)]	CAE_INVALID	ENUM	STRING	N/A			NONE	PUBLIC

	A	B	C	D	E	F	G	H	I	J
367	source	Particular source from which to retrieve items	CAE_INVALID	NUMBER	STRING	N/A			NONE	PUBLIC
368	level	A particular severity level at which to retrieve items, [NUMBER: (3: fatal) (2: error) (1: warning) (0: info)]	CAE_INVALID	NUMBER	INT4	N/A			NONE	PUBLIC
369	**Command**	**Description**	**NeedDate**	**Visibility**						
370	session.comment	Enter a log comment	CAE_OD_BUILD	PUBLIC						
371	**Argument**	**Arg_Description**	**NeedDate**	**Form**	**Representation**	**units**	**LoLimit**	**HiLimit**	**ValueType**	**Visibility**
372	text	The text of the comment to be entered	CAE_INVALID	NUMBER	STRING	N/A			NONE	PUBLIC
373	file	Name of the file to write the comment to. Comments are written to file by writing the time the comment was entered followed by the comment text. If the file specified does not exist, it will be created, and if the file specified does exist, it will be appended to.	CAE_INVALID	NUMBER	STRING	N/A			NONE	PUBLIC
374	**Command**	**Description**	**NeedDate**	**Visibility**						
375	session.watch	Watch for an item to go out-of-range	CAE_EARLY_SCIENCE	PUBLIC						
376	**Argument**	**Arg_Description**	**NeedDate**	**Form**	**Representation**	**units**	**LoLimit**	**HiLimit**	**ValueType**	**Visibility**
377	trigger	items to retrieve	CAE_INVALID	NUMBER	STRING	N/A			NONE	PUBLIC
378	min	Minimum acceptable value for item(s), (Default Type: CALCULATED, Value:)	CAE_INVALID	NUMBER	FLOAT8	N/A			NONE	PUBLIC
379	max	Maximum acceptable value for item(s), (Default Type: CALCULATED, Value:)	CAE_INVALID	NUMBER	FLOAT8	N/A			NONE	PUBLIC
380	**Command**	**Description**	**NeedDate**	**Visibility**						
381	session.shutdown_all_mcs	Used to shutdown the entire MCS	CAE_IOC	PUBLIC						
382	**sma** **List of Secondary Mirror Assembly (SMA) commands**									
383	**Command**	**Description**	**NeedDate**	**Visibility**						
384	sma.resume	Enables the application	CAE_FOC	PUBLIC						
385	**Command**	**Description**	**NeedDate**	**Visibility**						
386	sma.suspend	Suspends the application	CAE_FOC	PUBLIC						
387	**Command**	**Description**	**NeedDate**	**Visibility**						
388	sma.set	Set the value for a mode or parameter	CAE_ENG_BUILD_3	PUBLIC						
389	**Argument**	**Arg_Description**	**NeedDate**	**Form**	**Representation**	**units**	**LoLimit**	**HiLimit**	**ValueType**	**Visibility**
390	ANY	The keyword of this argument is the name of the item or array to set; the value supplied in this argument is the new value for the item or specified array element.	CAE_INVALID	NUMBER	STRING	N/A			INDEXED	PUBLIC
391	**Command**	**Description**	**NeedDate**	**Visibility**						
392	sma.verbose	Enables debugging output	CAE_IMMEDIATE	PUBLIC						
393	**Command**	**Description**	**NeedDate**	**Visibility**						
394	sma.quiet	Suspends debugging output	CAE_IMMEDIATE	PUBLIC						
395	**Command**	**Description**	**NeedDate**	**Visibility**						
396	sma.init	Reinitializes or restarts the SMA	CAE_ENG_BUILD_3	PUBLIC						

	A	B	C	D	E	F	G	H	I	J
397	**Command**	**Description**	**NeedDate**	**Visibility**						
398	sma.focus	Move the secondary mirror along the focus axis	CAE_ENG_BUILD_3	PUBLIC						
399	**Argument**	**Arg_Description**	**NeedDate**	**Form**	**Representation**	**units**	**LoLimit**	**HiLimit**	**ValueType**	**Visibility**
400	position	Focus position in the T axis, (Precision: 1.0) , (Accuracy: 10.0)	CAE_INVALID	NUMBER	FLOAT8	micrometers	-5000	5000	SET	PUBLIC
401	offset	Focus offset in the T axis, (Precision: 1.0) , (Accuracy: 1.0)	CAE_INVALID	NUMBER	FLOAT8	micrometers	-10000	10000	SET	PUBLIC
402	back_focus	Move to predefined back focus, [ENUM: (0: ignore) (2: zero) (4: here) (8: use)]	CAE_IOC	ENUM	STRING	N/A			SET	PUBLIC
403	**Command**	**Description**	**NeedDate**	**Visibility**						
404	sma.position	Reposition the secondary mirror	CAE_EARLY_SCIENCE	PUBLIC						
405	**Argument**	**Arg_Description**	**NeedDate**	**Form**	**Representation**	**units**	**LoLimit**	**HiLimit**	**ValueType**	**Visibility**
406	r	New position in the R axis, (Precision: 1.0) , (Accuracy: 4.0) , (Default Type: SETTABLE, Value: sma.position.r)	CAE_INVALID	NUMBER	FLOAT8	micrometers	-5000	5000	SET	PUBLIC
407	s	New position in the S axis, (Precision: 1.0) , (Accuracy: 4.0) , (Default Type: SETTABLE, Value: sma.position.s)	CAE_INVALID	NUMBER	FLOAT8	micrometers	-5000	5000	SET	PUBLIC
408	tip	Rotation around the R axis, (Precision: 0.7) , (Accuracy: 2.0) , (Default Type: SETTABLE, Value: sma.position.tip)	CAE_INVALID	NUMBER	FLOAT8	arcseconds	-1800	1800	SET	PUBLIC
409	tilt	Rotation around the S axis, (Precision: 0.7) , (Accuracy: 2.0) , (Default Type: SETTABLE, Value: sma.position.tilt)	CAE_INVALID	NUMBER	FLOAT8	arcseconds	-1800	1800	SET	PUBLIC
410	**Command**	**Description**	**NeedDate**	**Visibility**						
411	sma.calibrate	Tell the MCS that chopping is being calibrated	CAE_IOC	PUBLIC						
412	**Argument**	**Arg_Description**	**NeedDate**	**Form**	**Representation**	**units**	**LoLimit**	**HiLimit**	**ValueType**	**Visibility**
413	profile	Number of chop points, (Default Type: SETTABLE_REQUIRED_ONCE, Value: sma.chop.profile)	CAE_INVALID	NUMBER	UINT4	N/A	2		NONE	PUBLIC
414	sync_src	Internal or external chop synch signal?, (Default Type: SETTABLE_REQUIRED_ONCE, Value: sma.chop.sync_src) , [ENUM: (0: internal) (1: external) (3: analog)]	CAE_INVALID	ENUM	STRING	N/A			NONE	PUBLIC
415	frequency	TCM Chop frequency, (Default Type: SETTABLE, Value: sma.chop.frequency)	CAE_INVALID	NUMBER	FLOAT8	hertz	0	20	SET	PUBLIC
416	aois	AOIs to use to measure the amplitude	CAE_INVALID	NUMBER	STRING	N/A			SET	PUBLIC
417	**Command**	**Description**	**NeedDate**	**Visibility**						
418	sma.calculate	One step of the chopper calibration process	CAE_IOC	PUBLIC						
419	**Command**	**Description**	**NeedDate**	**Visibility**						
420	sma.finished	Tell the MCS that chopping is now calibrated	CAE_IOC	PUBLIC						
421	**Command**	**Description**	**NeedDate**	**Visibility**						
422	sma.measure	Measure the chop throw and angle	CAE_EARLY_SCIENCE	PUBLIC						
423	**Argument**	**Arg_Description**	**NeedDate**	**Form**	**Representation**	**units**	**LoLimit**	**HiLimit**	**ValueType**	**Visibility**

	A	B	C	D	E	F	G	H	I	J
424	triples	One or more sets of AOIs to calculate the throw with, (Default Type: CALCULATED, Value:)	CAE_INVALID	NUMBER	STRING	N/A			NONE	PUBLIC
425	**Command**	**Description**	**NeedDate**	**Visibility**						
426	sma.align	Compensates MCCS for SMA misalignment	CAE_IMMEDIATE	PUBLIC						
427	**Argument**	**Arg_Description**	**NeedDate**	**Form**	**Representation**	**units**	**LoLimit**	**HiLimit**	**ValueType**	**Visibility**
428	pos	Name of ERF position to be used to align the SMA	CAE_INVALID	NUMBER	STRING	N/A			POSITION	PUBLIC
429	**Command**	**Description**	**NeedDate**	**Visibility**						
430	sma.chop	Set up and start chopping	CAE_ENG_BUILD_3	PUBLIC						
431	**Argument**	**Arg_Description**	**NeedDate**	**Form**	**Representation**	**units**	**LoLimit**	**HiLimit**	**ValueType**	**Visibility**
432	frequency	TCM Chop frequency, (Precision: 0.5) , (Default Type: SETTABLE, Value: sma.chop.frequency)	CAE_INVALID	NUMBER	FLOAT8	hertz	0	20	SET	PUBLIC
433	settling_time	Minimum time interval for mirror to stabilize, (Precision: 0.1) , (Default Type: SETTABLE_REQUIRED_ONCE, Value: sma.chop.settling_time)	CAE_INVALID	NUMBER	FLOAT8	milliseconds	0	100	SET	PUBLIC
434	amplitude	Chop amplitude, (Default Type: SETTABLE, Value: sma.chop.amplitude)	CAE_INVALID	NUMBER	FLOAT8	arcseconds	-1125	1125	SET	PUBLIC
435	amp2	Secondary chop amplitude, (Default Type: SETTABLE, Value: sma.chop.amp2)	CAE_INVALID	NUMBER	FLOAT8	arcseconds	-1125	1125	SET	PUBLIC
436	profile	Number of chop points, (Default Type: SETTABLE_REQUIRED_ONCE, Value: sma.chop.profile)	CAE_INVALID	NUMBER	UINT4	N/A	2		NONE	PUBLIC
437	tip	Rotation around R, (Default Type: SETTABLE_REQUIRED_ONCE, Value: sma.chop.tip)	CAE_INVALID	NUMBER	FLOAT8	arcseconds	-1125	1125	SET	PUBLIC
438	tilt	Rotation around S, (Default Type: SETTABLE_REQUIRED_ONCE, Value: sma.chop.tilt)	CAE_INVALID	NUMBER	FLOAT8	arcseconds	-1125	1125	SET	PUBLIC
439	pos_ang	Angle between chop axis and positive ? axis, (Default Type: SETTABLE_REQUIRED_ONCE, Value: sma.chop.pos_ang)	CAE_INVALID	NUMBER	FLOAT8	degrees	-180	360	SET	PUBLIC
440	coord_sys	Coordinate system for pos_angle, (Default Type: FIXED, Value: TARF) , [ENUM: (0: IRF) (1: TARF) (2: TAICRF) (3: ERF) (4: WFIRF) (5: FFIRF) (6: FPIRF) (7: SIRF)]	CAE_INVALID	ENUM	STRING	N/A			NONE	PUBLIC
441	phase	Time delay between synch signal and chop, (Default Type: SETTABLE_REQUIRED_ONCE, Value: sma.chop.phase)	CAE_INVALID	NUMBER	FLOAT8	milliseconds	0	1000	SET	PUBLIC
442	sync_src	Internal or external chop synch signal?, (Default Type: SETTABLE_REQUIRED_ONCE, Value: sma.chop.sync_src) , [ENUM: (0: internal) (1: external) (3: analog)]	CAE_INVALID	ENUM	STRING	N/A			NONE	PUBLIC
443	start	Start chopping after download?, (Default Type: FIXED, Value: yes) , [ENUM: (0: no) (1: yes)]	CAE_EARLY_SCIENCE	ENUM	BOOL4	N/A			NONE	PUBLIC

	A	B	C	D	E	F	G	H	I	J
444	**Command**	**Description**	**NeedDate**	**Visibility**						
445	sma.stop	Halt the chopping at a desired location	CAE_SHORT_SCIENCE_B	PUBLIC						
446	**Argument**	**Arg_Description**	**NeedDate**	**Form**	**Representation**	**units**	**LoLimit**	**HiLimit**	**ValueType**	**Visibility**
447	at_pos	Chop point to stop at, (Default Type: SETTABLE, Value: sma.stop.at_pos) , [ENUM: (0: now) (1: no_chop) (2: zero) (3: plus) (4: minus)]	CAE_INVALID	ENUM	STRING	N/A			NONE	PUBLIC
448	**Command**	**Description**	**NeedDate**	**Visibility**						
449	sma.park	Park the SMA	CAE_ENG_BUILD_3	PUBLIC						
450	**Argument**	**Arg_Description**	**NeedDate**	**Form**	**Representation**	**units**	**LoLimit**	**HiLimit**	**ValueType**	**Visibility**
451	shutdown	Power off the SMA, (Default Type: FIXED, Value: no) , [ENUM: (0: no) (1: yes)]	CAE_INVALID	ENUM	BOOL4	N/A			NONE	PUBLIC
452	**Command**	**Description**	**NeedDate**	**Visibility**						
453	sma.save	Write an XML file containing current chop parameters	CAE_EARLY_SCIENCE	PUBLIC						
454	**Argument**	**Arg_Description**	**NeedDate**	**Form**	**Representation**	**units**	**LoLimit**	**HiLimit**	**ValueType**	**Visibility**
455	file	File name or path	CAE_INVALID	NUMBER	STRING	N/A			NONE	PUBLIC
456	new	Creating a new file?, (Default Type: FIXED, Value: 1) , [ENUM: (0: no) (1: yes)]	CAE_INVALID	ENUM	BOOL4	N/A			NONE	PUBLIC
457	action	What to do if new argument is wrong?, (Default Type: SETTABLE, Value: sma.save.action) , [ENUM: (-1: error) (0: ignore) (1: query)]	CAE_INVALID	ENUM	STRING	N/A			NONE	PUBLIC
458	**Command**	**Description**	**NeedDate**	**Visibility**						
459	sma.restore	Read an XML file containing current chop parameters	CAE_EARLY_SCIENCE	PUBLIC						
460	**Argument**	**Arg_Description**	**NeedDate**	**Form**	**Representation**	**units**	**LoLimit**	**HiLimit**	**ValueType**	**Visibility**
461	file	File name or path, (Default Type: CALCULATED, Value: sma.save.file)	CAE_INVALID	NUMBER	STRING	N/A			NONE	PUBLIC
462	**ta** **List of generic Telescope Assembly (TA) commands (not subsystem specific)**									
463	**Command**	**Description**	**NeedDate**	**Visibility**						
464	ta.debug	Outputs software debug information	CAE_INVALID	PUBLIC						
465	**Command**	**Description**	**NeedDate**	**Visibility**						
466	ta.poll	Turns on and off polling to the TA interfaces (system default is to have polling on)	CAE_INVALID	PUBLIC						
467	**Argument**	**Arg_Description**	**NeedDate**	**Form**	**Representation**	**units**	**LoLimit**	**HiLimit**	**ValueType**	**Visibility**
468	system	The TA subsystem (MCP or TRC) to affect the polling for	CAE_INVALID	NUMBER	STRING	none			NONE	PUBLIC
469	state	Specifies whether to turn polling on or off, [ENUM: (0: false) (1: true)]	CAE_INVALID	ENUM	BOOL4	none			NONE	PUBLIC
470	**Command**	**Description**	**NeedDate**	**Visibility**						
471	ta.cmd_timeout	Turns on and off the automatic setting of a timer for TA commands (system default is to set a timer)	CAE_INVALID	PUBLIC						

	A	B	C	D	E	F	G	H	I	J
472	**Argument**	**Arg_Description**	**NeedDate**	**Form**	**Representation**	**units**	**LoLimit**	**HiLimit**	**ValueType**	**Visibility**
473	enable	Specifies whether or not to set a command timer, [ENUM: (0: false) (1: true)]	CAE_INVALID	ENUM	BOOL4	none			NONE	PUBLIC
474	**ta_ffi** **List of Fine Field Imager (FFI) commands**									
475	**Command**	**Description**	**NeedDate**	**Visibility**						
476	ta_ffi.debug	Outputs software debug information	CAE_INVALID	PUBLIC						
477	**Command**	**Description**	**NeedDate**	**Visibility**						
478	ta_ffi.show_test_images	Indicates whether or not to process and display test images sent from the TA (system default is not to display test images)	CAE_INVALID	PUBLIC						
479	**Argument**	**Arg_Description**	**NeedDate**	**Form**	**Representation**	**units**	**LoLimit**	**HiLimit**	**ValueType**	**Visibility**
480	state	A value of true causes test images to be be processed and displayed while a value of false causes test images to be ignored, [ENUM: (0: no) (1: yes)]	CAE_INVALID	ENUM	BOOL4	N/A			NONE	PUBLIC
481	**Command**	**Description**	**NeedDate**	**Visibility**						
482	ta_ffi.retransmit_packets	Indicates whether or not to re-transmit packets received from the imagers to the PI Patch Panel (system default is not to re-transmit the packets). The user may also specify a host and a port to transmit to- if a host and port are not specified, then the default host and port are used.	CAE_INVALID	PUBLIC						
483	**Argument**	**Arg_Description**	**NeedDate**	**Form**	**Representation**	**units**	**LoLimit**	**HiLimit**	**ValueType**	**Visibility**
484	state	A value of true causes packets to be re-transmitted to the PI Patch Panel while a value of false causes packets not to be re-transmitted, [ENUM: (0: no) (1: yes)]	CAE_INVALID	ENUM	BOOL4	N/A			NONE	PUBLIC
485	host	The domain name or IP address of the host to re-transmit received imager packets to	CAE_INVALID	NUMBER	STRING	N/A			NONE	PUBLIC
486	port	The port number to re-transmit received imager packets to	CAE_INVALID	NUMBER	UINT2	N/A			NONE	PUBLIC
487	**Command**	**Description**	**NeedDate**	**Visibility**						
488	ta_ffi.scaling_range	Specifies whether the MCS should automatically determine or use investigator input for the minimum and maximum pixel values to use when scaling images (system default is for the MCS to do it automatically)	CAE_INVALID	PUBLIC						
489	**Argument**	**Arg_Description**	**NeedDate**	**Form**	**Representation**	**units**	**LoLimit**	**HiLimit**	**ValueType**	**Visibility**

	A	B	C	D	E	F	G	H	I	J
490	auto	A value of true causes the MCS to automatically find the min and max pixel values in the image while a value of false causes the MCS to use specified min and max values (see min and max arguments). This argument is not required if min and max are specified (manual mode is assumed). Similarly, if this argument is set to true, the min and max arguments are not required (they are ignored if provided)., [ENUM: (0: no) (1: yes)]	CAE_INVALID	ENUM	BOOL4	N/A			NONE	PUBLIC
491	min	Minimum pixel value to use when scaling	CAE_INVALID	NUMBER	UINT2	N/A	0	16383	NONE	PUBLIC
492	max	Maximum pixel value to use when scaling	CAE_INVALID	NUMBER	UINT2	N/A	0	16383	NONE	PUBLIC
493	**Command**	**Description**	**NeedDate**	**Visibility**						
494	ta_ffi.log	Causes the next received image to be written to file	CAE_INVALID	PUBLIC						
495	**Argument**	**Arg_Description**	**NeedDate**	**Form**	**Representation**	**units**	**LoLimit**	**HiLimit**	**ValueType**	**Visibility**
496	type	The format of the file data (binary or fits), [ENUM: (0: binary) (1: fits)]	CAE_INVALID	ENUM	STRING	N/A			NONE	PUBLIC
497	file	The file to write the image data to, do not add the file extension.	CAE_INVALID	NUMBER	STRING	N/A			NONE	PUBLIC
498	comment	If the type of the file is fits, then the contents of this argument will be added as a comment to the FITS header	CAE_INVALID	NUMBER	STRING	N/A			NONE	PUBLIC
499	n_times	Number of image files to write.	CAE_INVALID	NUMBER	INT4	N/A	1	100	NONE	PUBLIC
500	**Command**	**Description**	**NeedDate**	**Visibility**						
501	ta_ffi.image_to_hk	Causes the next received image to be sent to HK data	CAE_INVALID	PUBLIC						
502	**Argument**	**Arg_Description**	**NeedDate**	**Form**	**Representation**	**units**	**LoLimit**	**HiLimit**	**ValueType**	**Visibility**
503	type	The format of the HK data (binary or fits), [ENUM: (0: binary) (1: fits)]	CAE_INVALID	ENUM	STRING	N/A			NONE	PUBLIC
504	comment	If the format type is fits, then the contents of this argument will be added as a comment to the FITS header	CAE_INVALID	NUMBER	STRING	N/A			NONE	PUBLIC
505	**ta_fpi** **List of Focal Point Imager (FPI) commands**									
506	**Command**	**Description**	**NeedDate**	**Visibility**						
507	ta_fpi.debug	Outputs software debug information	CAE_INVALID	PUBLIC						
508	**Command**	**Description**	**NeedDate**	**Visibility**						
509	ta_fpi.show_test_images	Indicates whether or not to process and display test images sent from the TA (system default is not to display test images)	CAE_INVALID	PUBLIC						
510	**Argument**	**Arg_Description**	**NeedDate**	**Form**	**Representation**	**units**	**LoLimit**	**HiLimit**	**ValueType**	**Visibility**

	A	B	C	D	E	F	G	H	I	J
511	state	A value of true causes test images to be be processed and displayed while a value of false causes test images to be ignored, [ENUM: (0: no) (1: yes)]	CAE_INVALID	ENUM	BOOL4	N/A			NONE	PUBLIC
512	**Command**	**Description**	**NeedDate**	**Visibility**						
513	ta_fpi.retransmit_packets	Indicates whether or not to re-transmit packets received from the imagers to the PI Patch Panel (system default is not to re-transmit the packets). The user may also specify a host and a port to transmit to- if a host and port are not specified, then the default host and port are used.	CAE_INVALID	PUBLIC						
514	**Argument**	**Arg_Description**	**NeedDate**	**Form**	**Representation**	**units**	**LoLimit**	**HiLimit**	**ValueType**	**Visibility**
515	state	A value of true causes packets to be re-transmitted to the PI Patch Panel while a value of false causes packets not to be re-transmitted, [ENUM: (0: no) (1: yes)]	CAE_INVALID	ENUM	BOOL4	N/A			NONE	PUBLIC
516	host	The domain name or IP address of the host to re-transmit received imager packets to	CAE_INVALID	NUMBER	STRING	N/A			NONE	PUBLIC
517	port	The port number to re-transmit received imager packets to	CAE_INVALID	NUMBER	UINT2	N/A			NONE	PUBLIC
518	**Command**	**Description**	**NeedDate**	**Visibility**						
519	ta_fpi.scaling_range	Specifies whether the MCS should automatically determine or use investigator input for the minimum and maximum pixel values to use when scaling images (system default is for the MCS to do it automatically)	CAE_INVALID	PUBLIC						
520	**Argument**	**Arg_Description**	**NeedDate**	**Form**	**Representation**	**units**	**LoLimit**	**HiLimit**	**ValueType**	**Visibility**
521	auto	A value of true causes the MCS to automatically find the min and max pixel values in the image while a value of false causes the MCS to use specified min and max values (see min and max arguments). This argument is not required if min and max are specified (manual mode is assumed). Similarly, if this argument is set to true, the min and max arguments are not required (they are ignored if provided)., [ENUM: (0: no) (1: yes)]	CAE_INVALID	ENUM	BOOL4	N/A			NONE	PUBLIC
522	min	Minimum pixel value to use when scaling	CAE_INVALID	NUMBER	UINT2	N/A	0	16383	NONE	PUBLIC
523	max	Maximum pixel value to use when scaling	CAE_INVALID	NUMBER	UINT2	N/A	0	16383	NONE	PUBLIC
524	**Command**	**Description**	**NeedDate**	**Visibility**						
525	ta_fpi.log	Causes the next received image(s) to be written to file	CAE_INVALID	PUBLIC						
526	**Argument**	**Arg_Description**	**NeedDate**	**Form**	**Representation**	**units**	**LoLimit**	**HiLimit**	**ValueType**	**Visibility**
527	type	The format of the file data (binary or fits), [ENUM: (0: binary) (1: fits)]	CAE_INVALID	ENUM	STRING	N/A			NONE	PUBLIC

	A	B	C	D	E	F	G	H	I	J
528	file	The file to write the image data to, do not add the file extension.	CAE_INVALID	NUMBER	STRING	N/A			NONE	PUBLIC
529	comment	If the type of the file is fits, then the contents of this argument will be added as a comment to the FITS header	CAE_INVALID	NUMBER	STRING	N/A			NONE	PUBLIC
530	n_times	Number of image files to write.	CAE_INVALID	NUMBER	INT4	N/A	1	100	NONE	PUBLIC
531	**Command**	**Description**	**NeedDate**	**Visibility**						
532	ta_fpi.image_to_hk	Causes the next received image to be sent to HK data	CAE_INVALID	PUBLIC						
533	**Argument**	**Arg_Description**	**NeedDate**	**Form**	**Representation**	**units**	**LoLimit**	**HiLimit**	**ValueType**	**Visibility**
534	type	The format of the HK data (binary or fits), [ENUM: (0: binary) (1: fits)]	CAE_INVALID	ENUM	STRING	N/A			NONE	PUBLIC
535	comment	If the format type is fits, then the contents of this argument will be added as a comment to the FITS header	CAE_INVALID	NUMBER	STRING	N/A			NONE	PUBLIC
536	**ta_mcp** **List of TA Master Control Processor (MCP) commands**									
537	**Command**	**Description**	**NeedDate**	**Visibility**	**CmdVers**	**DestID**	**CmdID**			
538	ta_mcp.mcp_pwc_gate_valve_open	opens the pressure window gate valve	CAE_INVALID	PUBLIC	1	2	1			
539	**Command**	**Description**	**NeedDate**	**Visibility**	**CmdVers**	**DestID**	**CmdID**			
540	ta_mcp.mcp_pwc_gate_valve_close	closes the pressure window gate valve	CAE_INVALID	PUBLIC	1	2	2			
541	**Command**	**Description**	**NeedDate**	**Visibility**	**CmdVers**	**DestID**	**CmdID**			
542	ta_mcp.mcp_pdu_switch	sets the state of the power switch for the gate valve or bypass valve	CAE_INVALID	PUBLIC	1	1	3			
543	**Argument**	**Arg_Description**	**NeedDate**	**Form**	**Representation**	**units**	**LoLimit**	**HiLimit**	**ValueType**	**Visibility**
544	pdu_des_switch_id	desired power switch to toggle (gate valve or bypass valve), (Precision: N/A) , (Accuracy: N/A) , [ENUM: (12: PWV_115) (13: PWB_115)]	CAE_INVALID	ENUM	UINT1	N/A	12	13	NONE	PUBLIC
545	pdu_des_switch_action	whether to toggle the power switch ON or OFF, (Precision: N/A) , (Accuracy: N/A) , [ENUM: (0: OFF) (1: ON)]	CAE_INVALID	ENUM	UINT1	N/A	0	1	NONE	PUBLIC
546	**Command**	**Description**	**NeedDate**	**Visibility**	**CmdVers**	**DestID**	**CmdID**			
547	ta_mcp.mcp_ta_switch_off	closes all camera filters in preparation for manual TA power shut-down	CAE_INVALID	PUBLIC	1	1	5			
548	**Command**	**Description**	**NeedDate**	**Visibility**	**CmdVers**	**DestID**	**CmdID**			
549	ta_mcp.mcp_hk_rate	define the interval to send MCP HK data sets	CAE_INVALID	PUBLIC	1	0	6			
550	**Argument**	**Arg_Description**	**NeedDate**	**Form**	**Representation**	**units**	**LoLimit**	**HiLimit**	**ValueType**	**Visibility**
551	mcp_states_hk_rate	interval for MCP states HK data, (Precision: N/A) , (Accuracy: N/A)	CAE_INVALID	NUMBER	UINT1	N/A	0	10	SET	PUBLIC
552	pms_hk_rate	interval for MCP PMS HK data, (Precision: N/A) , (Accuracy: N/A)	CAE_INVALID	NUMBER	UINT1	N/A	0	10	SET	PUBLIC
553	pwc_hk_rate	interval for MCP PWC HK data, (Precision: N/A) , (Accuracy: N/A)	CAE_INVALID	NUMBER	UINT1	N/A	0	10	SET	PUBLIC

	A	B	C	D	E	F	G	H	I	J
554	pdu_hk_rate	interval for MCP PDU HK data, (Precision: N/A) , (Accuracy: N/A)	CAE_INVALID	NUMBER	UINT1	N/A	0	10	SET	PUBLIC
555	anu_hk_rate	interval for MCP annunciator HK data, (Precision: N/A) , (Accuracy: N/A)	CAE_INVALID	NUMBER	UINT1	N/A	0	10	SET	PUBLIC
556	**Command**	**Description**	**NeedDate**	**Visibility**	**CmdVers**	**DestID**	**CmdID**			
557	ta_mcp.mcp_tsc_hk_rate	define the interval to send TASCU HK data sets	CAE_INVALID	PUBLIC	1	0	7			
558	**Argument**	**Arg_Description**	**NeedDate**	**Form**	**Representation**	**units**	**LoLimit**	**HiLimit**	**ValueType**	**Visibility**
559	tsc_des_hk_rate	interval for passthrough of TASCU HK data, (Precision: N/A) , (Accuracy: N/A)	CAE_INVALID	NUMBER	UINT1	N/A	0	50	SET	PUBLIC
560	**Command**	**Description**	**NeedDate**	**Visibility**	**CmdVers**	**DestID**	**CmdID**			
561	ta_mcp.mcp_set_hk_limits	set the upper and lower limits for HK limit checking and annuciation activation	CAE_INVALID	PUBLIC	1	0	8			
562	**Argument**	**Arg_Description**	**NeedDate**	**Form**	**Representation**	**units**	**LoLimit**	**HiLimit**	**ValueType**	**Visibility**
563		identifier for annunciator limit HK data item, (Precision: N/A) , (Accuracy: N/A) , [ENUM: (1: MCP_ST_TA) (2: MCP_ST_SCS) (3: MCP_ST_TSC) (4: MCP_ST_PDU) (5: MCP_ST_PMS) (6: MCP_ST_PWC) (7: MCP_ST_TRC) (8: MCP_ST_MCP) (9: MCP_ST_BIT) (10: PMS_SPI_TEMP_1) (11: PMS_SPI_TEMP_2) (12: PMS_SPI_TEMP_3) (13: PMS_TEMP_1) (14: PMS_TEMP_2) (15: PMS_TEMP_3) (16: PMS_TMM_TEMP) (17: PMS_NT_TEMP_1) (18: PMS_NT_TEMP_2) (19: PMS_NT_TEMP_3) (20: PMS_SMA_TEMP) (21: PMS_STM_TEMP) (22: PWC_TEMP_1) (23: PWC_TEMP_2) (24: PWC_TEMP_3) (25: PWC_TEMP_4) (26: PWC_TEMP_5) (27: PWC_TEMP_6) (28: PWC_DIFF_PRESS) (29: PWC_GATE_POS1_OP) (30: PWC_GATE_POS1_CL) (31: PWC_BYPASS_POS_OP) (32: PWC_BYPASS_POS_CL) (33: PDU_IN_CURRENT) (34: PDU_FC_OUT_VOLTAGE) (35: PDU_FC_OUT_CURRENT) (36: PDU_24V_VOLTAGE) (37: PDU_24V_CURRENT) (38: PDU_UPS_VOLTAGE) (39: PDU_UPS_CURRENT) (40: PDU_UPS_STATUS) (41: ANU_FLAGS_1) (42: ANU_FLAGS_2) (43: TRC_CONN_HW) (44: TRC_CONN_CAN) (45: TRC_CONN_XYI) (46: TRC_CONN_LAN) (47: TRC_TRACK_ERR) (48: TRC_TRACK_WARN) (49: TSC_FINE_BAL_LIMIT) (50: TSC_ETHER_COMM_ERR) (51: TSC_CAN_COMM_ERR) (52: TSC_ALIGN_DUMMY_3_7) (53: TSC_MOTION_LIMIT) (54: TSC_PRESSURE_LIMIT) (55: TSC_DRV_AXIS_LIMIT) (56: TSC_MOTOR_OVERLOAD) (57: TSC_HYDR_FLUID_TEMP) (58: TSC_SPHER_BEARING) (59: TSC_VIS_RANGE_ERR) (60: TSC_LOCK_CAGE_FAULT) (61: TSC_STATUS) (62: TSC_INTERLOCK_SW) (63: SCS_GLOBAL_HEALTH) (64: SCS_FAULT_LOCATION)								

	A	B	C	D	E	F	G	H	I	J
564	mcp_hk_parameter_id	(65: SCS_FAULT_DIAGNOSTIC) (66: SCS_POWER) (67: SCS_INPUT_VOLTAGE) (68: SCS_INPUT_CURRENT) (69: SCS_ELECTRONICS) (70: SCS_SM_INSTALLED) (71: SCS_FCM_ACTU_1_POS) (72: SCS_FCM_ACTU_2_POS) (73: SCS_FCM_ACTU_3_POS) (74: SCS_FCM_ACTU_4_POS) (75: SCS_FCM_ACTU_5_POS) (76: SCS_FCM_ACTU_6_POS) (77: SCS_TCM_FREQUENCY) (78: SCS_TCM_SETTLE_TIME) (79: SCS_TCM_AMPLITUDE_1) (80: SCS_TCM_AMPLITUDE_2) (81: SCS_TCM_PROFILE) (82: SCS_TCM_TIP) (83: SCS_TCM_TILT) (84: SCS_TCM_ANGLE) (85: SCS_TCM_PHASE) (86: SCS_TCM_SYNC_SOURCE) (87: SCS_TCM_WF_ENABLED) (88: SCS_01_SENS_TEMP) (89: SCS_02_SENS_TEMP) (90: SCS_03_SENS_TEMP) (91: SCS_04_SENS_TEMP) (92: SCS_05_SENS_TEMP) (93: SCS_06_SENS_TEMP) (94: SCS_07_SENS_TEMP) (95: SCS_08_SENS_TEMP) (96: SCS_09_SENS_TEMP) (97: SCS_10_SENS_TEMP) (98: SCS_11_SENS_TEMP) (99: SCS_12_SENS_TEMP) (100: SCS_13_SENS_TEMP) (101: SCS_14_SENS_TEMP) (102: SCS_15_SENS_TEMP) (103: SCS_16_SENS_TEMP) (104: SCS_17_SENS_TEMP) (105: SCS_18_SENS_TEMP) (106: SCS_ACTU_1_CURRENT) (107: SCS_ACTU_2_CURRENT) (108: SCS_ACTU_3_CURRENT) (109: SCS_ACTU_4_CURRENT) (110: SCS_ACTU_5_CURRENT) (111: SCS_ACTU_6_CURRENT) (112: SCS_ACTU_7_CURRENT) (113: SCS_ACTU_8_CURRENT) (114: SCS_ACTU_9_CURRENT) (115: SCS_FCM_TIP) (116: SCS_FCM_TILT) (117: SCS_FCM_FOCUS) (118: SCS_FCM_EL) (119: SCS_FCM_XEL) (120: SCS_CURRENT_ALARM) (121: INT_CR_COMM_ERR) (122: INT_HK_COMM_ERR) (123: INT_PMS_M1SPI_DIFF) (124: INT_WD_PDU) (125: INT_WD_TRC) (126: INT_WD_TSC) (127: INT_WD_SCS)]	CAE_INVALID	ENUM	UINT4	N/A	1	127	NONE	PUBLIC
565	mcp_hk_upper_limit	upper limit for annunciator HK data item, (Precision: 6 sig. digits) , (Accuracy: N/A)	CAE_INVALID	NUMBER	FLOAT4	N/A	-3.40E+38	3.40E+38	NONE	PUBLIC
566	mcp_hk_lower_limit	lower limit for annunciator HK data item, (Precision: 6 sig. digits) , (Accuracy: N/A)	CAE_INVALID	NUMBER	FLOAT4	N/A	-3.40E+38	3.40E+38	NONE	PUBLIC
567	**Command**	**Description**	**NeedDate**	**Visibility**	**CmdVers**	**DestID**	**CmdID**			
568	ta_mcp.mcp_annunciator_confirm	acknowledge receipt of an annunciator alarm	CAE_INVALID	PUBLIC	1	4	9			
569	**Argument**	**Arg_Description**	**NeedDate**	**Form**	**Representation**	**units**	**LoLimit**	**HiLimit**	**ValueType**	**Visibility**

	A	B	C	D	E	F	G	H	I	J
570	mcp_indicator_id	identifier for MCP annunciator light, (Precision: N/A) , (Accuracy: N/A) , [ENUM: (1: LM_MOTOR_AVG_CURR) (2: LM_LOCK_CAGE_FAULT) (3: LM_MOTION_LIMIT) (4: LM_PW_ASSEMBLY_LEAK) (5: LM_TA_MCCS_COMM) (6: LM_MOTOR_PEAK_CURR) (7: LM_SPHER_BEARING) (8: LM_DRV_AXIS_LIMIT) (9: LM_GV_OPEN) (10: LM_ETHER_COMM_ERR) (11: LM_POWER_SUPPLY_LIMIT) (12: LM_MOTOR_OVERLOAD) (13: LM_FINE_BAL_LIMIT) (14: LM_GV_CLOSED) (15: LM_CAN_COMM_ERR) (16: LM_TA_PDU_UPS_ACT) (17: LM_HYDR_FLUID_TEMP) (18: LM_VIS_RANGE_ERR) (19: LM_SMA_UNSECURED) (20: LM_WATCHDOG) (21: LM_TA_PDU_UPS_3) (22: LM_PRESSURE_LIMIT) (23: LM_SPARE_23) (24: LM_SMA_MAX_CHOP_AMPL) (25: LM_LOSS_OF_TRC_ERR) (26: LM_SPARE_26) (27: LM_TA_STOP_ACTUATED) (28: LM_SPARE_28) (29: LM_SMA_MOTOR_AVG_CURR) (30: LM_LOSS_OF_TRC_WARN) (31: LM_FFU) (32: LM_SPARE_32) (33: LM_SPARE_33) (34: LM_SMA_MOTOR_PEAK_CURR) (35: LM_SPARE_35) (36: LM_SPARE_36) (37: LM_SPARE_37) (38: LM_SPARE_38) (39: LM_SPARE_39) (40: LM_TEMPERATURE)]	CAE_INVALID	ENUM	UINT1	N/A	1	40	NONE	PUBLIC
571	**Command**	**Description**	**NeedDate**	**Visibility**	**CmdVers**	**DestID**	**CmdID**			
572	ta_mcp.mcp_annunciator_test	briefly activate all annunciator lamps on annunciator panel	CAE_INVALID	PUBLIC	1	4	10			
573	**Command**	**Description**	**NeedDate**	**Visibility**	**CmdVers**	**DestID**	**CmdID**			
574	ta_mcp.mcp_built_in_test	test TA internal communication interfaces	CAE_INVALID	PUBLIC	1	0	11			
575	**Command**	**Description**	**NeedDate**	**Visibility**	**CmdVers**	**DestID**	**CmdID**			
576	ta_mcp.mcp_sw_version	return current version of MCP software	CAE_INVALID	PUBLIC	1	0	12			
577	**Command**	**Description**	**NeedDate**	**Visibility**	**CmdVers**	**DestID**	**CmdID**			
578	ta_mcp.mcp_image_quality_compensation	adjust SMA position to improve image quality	CAE_INVALID	PUBLIC	1	0	13			
579	**Command**	**Description**	**NeedDate**	**Visibility**	**CmdVers**	**DestID**	**CmdID**			
580	ta_mcp.mcp_image_qc_init	initialize Image Quality Compensation algorithms	CAE_INVALID	PUBLIC	1	0	14			
581	**Command**	**Description**	**NeedDate**	**Visibility**	**CmdVers**	**DestID**	**CmdID**			
582	ta_mcp.mcp_test_command	verify the MCP-MCS communications interface	CAE_INVALID	PUBLIC	1	0	65535			
583	**Argument**	**Arg_Description**	**NeedDate**	**Form**	**Representation**	**units**	**LoLimit**	**HiLimit**	**ValueType**	**Visibility**
584	send_telemetry	whether to return data in the response, (Precision: N/A) , (Accuracy: N/A) , [ENUM: (0: FALSE) (1: TRUE)]	CAE_INVALID	ENUM	UINT1	N/A	0	1	NONE	PUBLIC
585	wait_to_respond	whether to wait before issuing response, (Precision: N/A) , (Accuracy: N/A) , [ENUM: (0: FALSE) (1: TRUE)]	CAE_INVALID	ENUM	UINT1	N/A	0	1	NONE	PUBLIC
586	logical_l1	a logical value to return, (Precision: N/A) , (Accuracy: N/A) , [ENUM: (0: FALSE) (1: TRUE)]	CAE_INVALID	ENUM	UINT1	N/A	0	1	NONE	PUBLIC

	A	B	C	D	E	F	G	H	I	J
587	unsigned_one_byte_integer_u1	an unsigned one-byte int to return, (Precision: N/A) , (Accuracy: N/A)	CAE_INVALID	NUMBER	UINT1	N/A	0	254	NONE	PUBLIC
588	unsigned_two_byte_integer_u2	an unsigned two-byte int to return, (Precision: N/A) , (Accuracy: N/A)	CAE_INVALID	NUMBER	UINT2	N/A	0	65535	NONE	PUBLIC
589	unsigned_four_byte_integer_u4	an unsigned four-byte int to return, (Precision: N/A) , (Accuracy: N/A)	CAE_INVALID	NUMBER	UINT4	N/A	0	4294967295	NONE	PUBLIC
590	signed_one_byte_integer_i1	a signed one-byte int to return, (Precision: N/A) , (Accuracy: N/A)	CAE_INVALID	NUMBER	BYTE	N/A	-128	127	NONE	PUBLIC
591	signed_two_byte_integer_i2	a signed two-byte int to return, (Precision: N/A) , (Accuracy: N/A)	CAE_INVALID	NUMBER	INT2	N/A	-32768	32767	NONE	PUBLIC
592	signed_four_byte_integer_i4	a signed four-byte int to return, (Precision: N/A) , (Accuracy: N/A)	CAE_INVALID	NUMBER	INT4	N/A	-2.15E+09	2147483647	NONE	PUBLIC
593	single_prec_float_r4	a single-precision float to return, (Precision: 6 sig. digits) , (Accuracy: N/A)	CAE_INVALID	NUMBER	FLOAT4	N/A	-3.40E+38	3.40E+38	NONE	PUBLIC
594	double_prec_float_r8	a double-precision float to return, (Precision: 15 sig. digits) , (Accuracy: N/A)	CAE_INVALID	NUMBER	FLOAT8	N/A	-1.79769E308	1.79769E308	NONE	PUBLIC
595	eight_byte_time_stamp_t8	a standard 8-byte timestamp to return, (Precision: 1 ns) , (Accuracy: 1 ms)	CAE_INVALID	NUMBER	TIME8	N/A	0	2147483647	NONE	PUBLIC
596	**Command**	**Description**	**NeedDate**	**Visibility**	**CmdVers**	**DestID**	**CmdID**			
597	ta_mcp.send_packet	Used to send pass through data packets to the TA	CAE_INVALID	PUBLIC	1	0	0			
598	**Argument**	**Arg_Description**	**NeedDate**	**Form**	**Representation**	**units**	**LoLimit**	**HiLimit**	**ValueType**	**Visibility**
599	packet	The data packet to send encoded as an ASCII hexadecimal string	CAE_INVALID	NUMBER	STRING	N/A			NONE	PUBLIC
600	**Command**	**Description**	**NeedDate**	**Visibility**	**CmdVers**	**DestID**	**CmdID**			
601	ta_mcp.set_archive_nsample	Set the archive nsample for a data group	CAE_INVALID	PUBLIC	1	0	99999			
602	**Argument**	**Arg_Description**	**NeedDate**	**Form**	**Representation**	**units**	**LoLimit**	**HiLimit**	**ValueType**	**Visibility**
603	datagroup	Data group name, (Precision: N/A) , (Accuracy: N/A) , [ENUM: (1: mcp_hk_states) (2: mcp_hk_pms) (3: mcp_hk_pwc) (4: mcp_hk_pdu) (5: mcp_hk_anu)]	CAE_INVALID	ENUM	STRING	N/A	1	5	NONE	PUBLIC
604	nsample	archive n sample value, (Precision: N/A) , (Accuracy: N/A) , (Default Type: FIXED, Value: 1)	CAE_INVALID	NUMBER	UINT4	N/A	0	4294967295	NONE	PUBLIC
605	**Command**	**Description**	**NeedDate**	**Visibility**	**CmdVers**	**DestID**	**CmdID**			
606	ta_mcp.mcp_config_set	overrides the internal MCP software configuration data	CAE_INVALID	PUBLIC	1	0	65281			
607	**Argument**	**Arg_Description**	**NeedDate**	**Form**	**Representation**	**units**	**LoLimit**	**HiLimit**	**ValueType**	**Visibility**
608	can_base_addr	CAN module base address, (Precision: N/A) , (Accuracy: N/A) , (Default Type: FIXED, Value: 0xfbff3000)	CAE_INVALID	NUMBER	UINT4	N/A	0	4294967295	NONE	PRIVATE
609	can_poll	CAN polling time (in CPU ticks), (Precision: N/A) , (Accuracy: N/A) , (Default Type: FIXED, Value: 1)	CAE_INVALID	NUMBER	INT4	N/A	-32768	32767	NONE	PRIVATE
610	can_controller_id	CAN controller ID, (Precision: N/A) , (Accuracy: N/A) , (Default Type: FIXED, Value: 0x1122)	CAE_INVALID	NUMBER	INT4	N/A	-32768	32767	NONE	PRIVATE

	A	B	C	D	E	F	G	H	I	J
611	anu_can_version	ANU CAN controller version ID, (Precision: N/A) , (Accuracy: N/A) , (Default Type: FIXED, Value: 0x10120000)	CAE_INVALID	NUMBER	UINT4	N/A	0	4294967295	NONE	PRIVATE
612	anu_can_nsr_timeout	timeout of CAN NSR-response, (Precision: N/A) , (Accuracy: N/A) , (Default Type: FIXED, Value: 1)	CAE_INVALID	NUMBER	INT4	seconds	-32768	32767	NONE	PRIVATE
613	anu_test_time	ANU-LED test time, (Precision: N/A) , (Accuracy: N/A) , (Default Type: FIXED, Value: 5)	CAE_INVALID	NUMBER	INT4	seconds	-32768	32767	NONE	PRIVATE
614	anu_pwle	differential pressure limit, (Precision: N/A) , (Accuracy: N/A) , (Default Type: FIXED, Value: 30)	CAE_INVALID	NUMBER	FLOAT4	millibars	-3.40E+38	3.40E+38	NONE	PRIVATE
615	anu_m2un	temperature limit of SM not-in-place def., (Precision: N/A) , (Accuracy: N/A) , (Default Type: FIXED, Value: 100)	CAE_INVALID	NUMBER	FLOAT4	degrees Celsius	-3.40E+38	3.40E+38	NONE	PRIVATE
616	anu_fcm_curr	current limit FCM average, (Precision: N/A) , (Accuracy: N/A) , (Default Type: FIXED, Value: 3)	CAE_INVALID	NUMBER	FLOAT4	amperes	-3.40E+38	3.40E+38	NONE	PRIVATE
617	anu_tcm_curr	current limit TCM average, (Precision: N/A) , (Accuracy: N/A) , (Default Type: FIXED, Value: 2)	CAE_INVALID	NUMBER	FLOAT4	amperes	-3.40E+38	3.40E+38	NONE	PRIVATE
618	anu_tcm_low_lim	TCM chop amplitude low-limit, (Precision: N/A) , (Accuracy: N/A) , (Default Type: FIXED, Value: -1800)	CAE_INVALID	NUMBER	FLOAT4	arcseconds	-3.40E+38	3.40E+38	NONE	PRIVATE
619	anu_tcm_up_lim	TCM chop amplitude up-limit, (Precision: N/A) , (Accuracy: N/A) , (Default Type: FIXED, Value: 1800)	CAE_INVALID	NUMBER	FLOAT4	arcseconds	-3.40E+38	3.40E+38	NONE	PRIVATE
620	anu_fcm_act_low_lim	FCM actuator position low-limit, (Precision: N/A) , (Accuracy: N/A) , (Default Type: FIXED, Value: -5100)	CAE_INVALID	NUMBER	INT4	micrometers	-32768	32767	NONE	PRIVATE
621	anu_fcm_act_up_lim	FCM actuator position up-limit, (Precision: N/A) , (Accuracy: N/A) , (Default Type: FIXED, Value: 6000)	CAE_INVALID	NUMBER	INT4	micrometers	-32768	32767	NONE	PRIVATE
622	anu_m1spi_diff	temperature difference between M1 and spider, (Precision: N/A) , (Accuracy: N/A) , (Default Type: FIXED, Value: 3)	CAE_INVALID	NUMBER	FLOAT4	kelvins	-3.40E+38	3.40E+38	NONE	PRIVATE
623	anu_pdu_ups12_batop	utility off bits of NOVA converter, (Precision: N/A) , (Accuracy: N/A) , (Default Type: FIXED, Value: 0x1010)	CAE_INVALID	NUMBER	UINT2	N/A	0	65535	NONE	PRIVATE
624	anu_pdu_ups12_lowbat	low bat bits of NOVA converter, (Precision: N/A) , (Accuracy: N/A) , (Default Type: FIXED, Value: 0x0101)	CAE_INVALID	NUMBER	UINT2	N/A	0	65535	NONE	PRIVATE
625	anu_pdu_115_3p_low_lim	lower voltage limit 3Phase power, (Precision: N/A) , (Accuracy: N/A) , (Default Type: FIXED, Value: 80.0)	CAE_INVALID	NUMBER	FLOAT4	volts	-3.40E+38	3.40E+38	NONE	PRIVATE
626	anu_pdu_115_3p_up_lim	upper voltage limit 3Phase power, (Precision: N/A) , (Accuracy: N/A) , (Default Type: FIXED, Value: 130.0)	CAE_INVALID	NUMBER	FLOAT4	volts	-3.40E+38	3.40E+38	NONE	PRIVATE

	A	B	C	D	E	F	G	H	I	J
627	anu_pdu_115_ups_low_lim	lower voltage limit UPS power, (Precision: N/A) , (Accuracy: N/A) , (Default Type: FIXED, Value: 80.0)	CAE_INVALID	NUMBER	FLOAT4	volts	-3.40E+38	3.40E+38	NONE	PRIVATE
628	anu_pdu_115_ups_up_lim	upper voltage limit UPS power, (Precision: N/A) , (Accuracy: N/A) , (Default Type: FIXED, Value: 130.0)	CAE_INVALID	NUMBER	FLOAT4	volts	-3.40E+38	3.40E+38	NONE	PRIVATE
629	anu_pdu_PB1_curr_avg	PUA1 on PB1 average current limit, (Precision: N/A) , (Accuracy: N/A) , (Default Type: FIXED, Value: 35)	CAE_INVALID	NUMBER	FLOAT4	amperes	-3.40E+38	3.40E+38	NONE	PRIVATE
630	anu_pdu_PB1_curr_peak	PUA1 on PB1 peak current limit, (Precision: N/A) , (Accuracy: N/A) , (Default Type: FIXED, Value: 40.0)	CAE_INVALID	NUMBER	FLOAT4	amperes	-3.40E+38	3.40E+38	NONE	PRIVATE
631	anu_can_id_base	CAN_ID base of display elements, (Precision: N/A) , (Accuracy: N/A) , (Default Type: FIXED, Value: 1900)	CAE_INVALID	NUMBER	INT4	N/A	-32768	32767	NONE	PRIVATE
632	anu_display_test_text	ANU test pattern, (Precision: N/A) , (Accuracy: N/A) , (Default Type: FIXED, Value: ....)	CAE_INVALID	NUMBER	STRING	N/A	N/A	N/A	NONE	PRIVATE
633	anu_display_test_code	ANU display properties (flash, reverse), (Precision: N/A) , (Accuracy: N/A) , (Default Type: FIXED, Value: 0)	CAE_INVALID	NUMBER	UINT1	N/A	N/A	N/A	NONE	PRIVATE
634	anu_display_0_text	text of ANU element, (Precision: N/A) , (Accuracy: N/A) , (Default Type: FIXED, Value: MAEX)	CAE_INVALID	NUMBER	STRING	N/A	N/A	N/A	NONE	PRIVATE
635	anu_display_0_code	ANU display properties (flash, reverse), (Precision: N/A) , (Accuracy: N/A) , (Default Type: FIXED, Value: 0)	CAE_INVALID	NUMBER	UINT1	N/A	N/A	N/A	NONE	PRIVATE
636	anu_display_1_text	text of ANU element, (Precision: N/A) , (Accuracy: N/A) , (Default Type: FIXED, Value: BRKS)	CAE_INVALID	NUMBER	STRING	N/A	N/A	N/A	NONE	PRIVATE
637	anu_display_1_code	ANU display properties (flash, reverse), (Precision: N/A) , (Accuracy: N/A) , (Default Type: FIXED, Value: 0)	CAE_INVALID	NUMBER	UINT1	N/A	N/A	N/A	NONE	PRIVATE
638	anu_display_2_text	text of ANU element, (Precision: N/A) , (Accuracy: N/A) , (Default Type: FIXED, Value: MLEX)	CAE_INVALID	NUMBER	STRING	N/A	N/A	N/A	NONE	PRIVATE
639	anu_display_2_code	ANU display properties (flash, reverse), (Precision: N/A) , (Accuracy: N/A) , (Default Type: FIXED, Value: 0)	CAE_INVALID	NUMBER	UINT1	N/A	N/A	N/A	NONE	PRIVATE
640	anu_display_3_text	text of ANU element, (Precision: N/A) , (Accuracy: N/A) , (Default Type: FIXED, Value: PWLE)	CAE_INVALID	NUMBER	STRING	N/A	N/A	N/A	NONE	PRIVATE
641	anu_display_3_code	ANU display properties (flash, reverse), (Precision: N/A) , (Accuracy: N/A) , (Default Type: FIXED, Value: 0)	CAE_INVALID	NUMBER	UINT1	N/A	N/A	N/A	NONE	PRIVATE
642	anu_display_4_text	text of ANU element, (Precision: N/A) , (Accuracy: N/A) , (Default Type: FIXED, Value: MCCS)	CAE_INVALID	NUMBER	STRING	N/A	N/A	N/A	NONE	PRIVATE

	A	B	C	D	E	F	G	H	I	J
643	anu_display_4_code	ANU display properties (flash, reverse), (Precision: N/A) , (Accuracy: N/A) , (Default Type: FIXED, Value: 0)	CAE_INVALID	NUMBER	UINT1	N/A	N/A	N/A	NONE	PRIVATE
644	anu_display_5_text	text of ANU element, (Precision: N/A) , (Accuracy: N/A) , (Default Type: FIXED, Value: MPEX)	CAE_INVALID	NUMBER	STRING	N/A	N/A	N/A	NONE	PRIVATE
645	anu_display_5_code	ANU display properties (flash, reverse), (Precision: N/A) , (Accuracy: N/A) , (Default Type: FIXED, Value: 0)	CAE_INVALID	NUMBER	UINT1	N/A	N/A	N/A	NONE	PRIVATE
646	anu_display_6_text	text of ANU element, (Precision: N/A) , (Accuracy: N/A) , (Default Type: FIXED, Value: RIA)	CAE_INVALID	NUMBER	STRING	N/A	N/A	N/A	NONE	PRIVATE
647	anu_display_6_code	ANU display properties (flash, reverse), (Precision: N/A) , (Accuracy: N/A) , (Default Type: FIXED, Value: 0)	CAE_INVALID	NUMBER	UINT1	N/A	N/A	N/A	NONE	PRIVATE
648	anu_display_7_text	text of ANU element, (Precision: N/A) , (Accuracy: N/A) , (Default Type: FIXED, Value: ELEX)	CAE_INVALID	NUMBER	STRING	N/A	N/A	N/A	NONE	PRIVATE
649	anu_display_7_code	ANU display properties (flash, reverse), (Precision: N/A) , (Accuracy: N/A) , (Default Type: FIXED, Value: 0)	CAE_INVALID	NUMBER	UINT1	N/A	N/A	N/A	NONE	PRIVATE
650	anu_display_8_text	text of ANU element, (Precision: N/A) , (Accuracy: N/A) , (Default Type: FIXED, Value: PWOP)	CAE_INVALID	NUMBER	STRING	N/A	N/A	N/A	NONE	PRIVATE
651	anu_display_8_code	ANU display properties (flash, reverse), (Precision: N/A) , (Accuracy: N/A) , (Default Type: FIXED, Value: 0)	CAE_INVALID	NUMBER	UINT1	N/A	N/A	N/A	NONE	PRIVATE
652	anu_display_9_text	text of ANU element, (Precision: N/A) , (Accuracy: N/A) , (Default Type: FIXED, Value: LAN)	CAE_INVALID	NUMBER	STRING	N/A	N/A	N/A	NONE	PRIVATE
653	anu_display_9_code	ANU display properties (flash, reverse), (Precision: N/A) , (Accuracy: N/A) , (Default Type: FIXED, Value: 0)	CAE_INVALID	NUMBER	UINT1	N/A	N/A	N/A	NONE	PRIVATE
654	anu_display_10_text	text of ANU element, (Precision: N/A) , (Accuracy: N/A) , (Default Type: FIXED, Value: U EX)	CAE_INVALID	NUMBER	STRING	N/A	N/A	N/A	NONE	PRIVATE
655	anu_display_10_code	ANU display properties (flash, reverse), (Precision: N/A) , (Accuracy: N/A) , (Default Type: FIXED, Value: 0)	CAE_INVALID	NUMBER	UINT1	N/A	N/A	N/A	NONE	PRIVATE
656	anu_display_11_text	text of ANU element, (Precision: N/A) , (Accuracy: N/A) , (Default Type: FIXED, Value: PUMP)	CAE_INVALID	NUMBER	STRING	N/A	N/A	N/A	NONE	PRIVATE
657	anu_display_11_code	ANU display properties (flash, reverse), (Precision: N/A) , (Accuracy: N/A) , (Default Type: FIXED, Value: 0)	CAE_INVALID	NUMBER	UINT1	N/A	N/A	N/A	NONE	PRIVATE
658	anu_display_12_text	text of ANU element, (Precision: N/A) , (Accuracy: N/A) , (Default Type: FIXED, Value: FBEX)	CAE_INVALID	NUMBER	STRING	N/A	N/A	N/A	NONE	PRIVATE

	A	B	C	D	E	F	G	H	I	J
659	anu_display_12_code	ANU display properties (flash, reverse), (Precision: N/A) , (Accuracy: N/A) , (Default Type: FIXED, Value: 0)	CAE_INVALID	NUMBER	UINT1	N/A	N/A	N/A	NONE	PRIVATE
660	anu_display_13_text	text of ANU element, (Precision: N/A) , (Accuracy: N/A) , (Default Type: FIXED, Value: PWCL)	CAE_INVALID	NUMBER	STRING	N/A	N/A	N/A	NONE	PRIVATE
661	anu_display_13_code	ANU display properties (flash, reverse), (Precision: N/A) , (Accuracy: N/A) , (Default Type: FIXED, Value: 0)	CAE_INVALID	NUMBER	UINT1	N/A	N/A	N/A	NONE	PRIVATE
662	anu_display_14_text	text of ANU element, (Precision: N/A) , (Accuracy: N/A) , (Default Type: FIXED, Value: CAN)	CAE_INVALID	NUMBER	STRING	N/A	N/A	N/A	NONE	PRIVATE
663	anu_display_14_code	ANU display properties (flash, reverse), (Precision: N/A) , (Accuracy: N/A) , (Default Type: FIXED, Value: 0)	CAE_INVALID	NUMBER	UINT1	N/A	N/A	N/A	NONE	PRIVATE
664	anu_display_15_text	text of ANU element, (Precision: N/A) , (Accuracy: N/A) , (Default Type: FIXED, Value: UPSA)	CAE_INVALID	NUMBER	STRING	N/A	N/A	N/A	NONE	PRIVATE
665	anu_display_15_code	ANU display properties (flash, reverse), (Precision: N/A) , (Accuracy: N/A) , (Default Type: FIXED, Value: 0)	CAE_INVALID	NUMBER	UINT1	N/A	N/A	N/A	NONE	PRIVATE
666	anu_display_16_text	text of ANU element, (Precision: N/A) , (Accuracy: N/A) , (Default Type: FIXED, Value: HYEX)	CAE_INVALID	NUMBER	STRING	N/A	N/A	N/A	NONE	PRIVATE
667	anu_display_16_code	ANU display properties (flash, reverse), (Precision: N/A) , (Accuracy: N/A) , (Default Type: FIXED, Value: 0)	CAE_INVALID	NUMBER	UINT1	N/A	N/A	N/A	NONE	PRIVATE
668	anu_display_17_text	text of ANU element, (Precision: N/A) , (Accuracy: N/A) , (Default Type: FIXED, Value: VISX)	CAE_INVALID	NUMBER	STRING	N/A	N/A	N/A	NONE	PRIVATE
669	anu_display_17_code	ANU display properties (flash, reverse), (Precision: N/A) , (Accuracy: N/A) , (Default Type: FIXED, Value: 0)	CAE_INVALID	NUMBER	UINT1	N/A	N/A	N/A	NONE	PRIVATE
670	anu_display_18_text	text of ANU element, (Precision: N/A) , (Accuracy: N/A) , (Default Type: FIXED, Value: M2UN)	CAE_INVALID	NUMBER	STRING	N/A	N/A	N/A	NONE	PRIVATE
671	anu_display_18_code	ANU display properties (flash, reverse), (Precision: N/A) , (Accuracy: N/A) , (Default Type: FIXED, Value: 0)	CAE_INVALID	NUMBER	UINT1	N/A	N/A	N/A	NONE	PRIVATE
672	anu_display_19_text	text of ANU element, (Precision: N/A) , (Accuracy: N/A) , (Default Type: FIXED, Value: MCPW)	CAE_INVALID	NUMBER	STRING	N/A	N/A	N/A	NONE	PRIVATE
673	anu_display_19_code	ANU display properties (flash, reverse), (Precision: N/A) , (Accuracy: N/A) , (Default Type: FIXED, Value: 0)	CAE_INVALID	NUMBER	UINT1	N/A	N/A	N/A	NONE	PRIVATE
674	anu_display_20_text	text of ANU element, (Precision: N/A) , (Accuracy: N/A) , (Default Type: FIXED, Value: UPSL)	CAE_INVALID	NUMBER	STRING	N/A	N/A	N/A	NONE	PRIVATE

	A	B	C	D	E	F	G	H	I	J
675	anu_display_20_code	ANU display properties (flash, reverse), (Precision: N/A) , (Accuracy: N/A) , (Default Type: FIXED, Value: 0)	CAE_INVALID	NUMBER	UINT1	N/A	N/A	N/A	NONE	PRIVATE
676	anu_display_21_text	text of ANU element, (Precision: N/A) , (Accuracy: N/A) , (Default Type: FIXED, Value: PREX)	CAE_INVALID	NUMBER	STRING	N/A	N/A	N/A	NONE	PRIVATE
677	anu_display_21_code	ANU display properties (flash, reverse), (Precision: N/A) , (Accuracy: N/A) , (Default Type: FIXED, Value: 0)	CAE_INVALID	NUMBER	UINT1	N/A	N/A	N/A	NONE	PRIVATE
678	anu_display_22_text	text of ANU element, (Precision: N/A) , (Accuracy: N/A) , (Default Type: FIXED, Value:)	CAE_INVALID	NUMBER	STRING	N/A	N/A	N/A	NONE	PRIVATE
679	anu_display_22_code	ANU display properties (flash, reverse), (Precision: N/A) , (Accuracy: N/A) , (Default Type: FIXED, Value: 0)	CAE_INVALID	NUMBER	UINT1	N/A	N/A	N/A	NONE	PRIVATE
680	anu_display_23_text	text of ANU element, (Precision: N/A) , (Accuracy: N/A) , (Default Type: FIXED, Value: CAEX)	CAE_INVALID	NUMBER	STRING	N/A	N/A	N/A	NONE	PRIVATE
681	anu_display_23_code	ANU display properties (flash, reverse), (Precision: N/A) , (Accuracy: N/A) , (Default Type: FIXED, Value: 0)	CAE_INVALID	NUMBER	UINT1	N/A	N/A	N/A	NONE	PRIVATE
682	anu_display_24_text	text of ANU element, (Precision: N/A) , (Accuracy: N/A) , (Default Type: FIXED, Value: LOTE)	CAE_INVALID	NUMBER	STRING	N/A	N/A	N/A	NONE	PRIVATE
683	anu_display_24_code	ANU display properties (flash, reverse), (Precision: N/A) , (Accuracy: N/A) , (Default Type: FIXED, Value: 0)	CAE_INVALID	NUMBER	UINT1	N/A	N/A	N/A	NONE	PRIVATE
684	anu_display_25_text	text of ANU element, (Precision: N/A) , (Accuracy: N/A) , (Default Type: FIXED, Value:)	CAE_INVALID	NUMBER	STRING	N/A	N/A	N/A	NONE	PRIVATE
685	anu_display_25_code	ANU display properties (flash, reverse), (Precision: N/A) , (Accuracy: N/A) , (Default Type: FIXED, Value: 0)	CAE_INVALID	NUMBER	UINT1	N/A	N/A	N/A	NONE	PRIVATE
686	anu_display_26_text	text of ANU element, (Precision: N/A) , (Accuracy: N/A) , (Default Type: FIXED, Value: STOP)	CAE_INVALID	NUMBER	STRING	N/A	N/A	N/A	NONE	PRIVATE
687	anu_display_26_code	ANU display properties (flash, reverse), (Precision: N/A) , (Accuracy: N/A) , (Default Type: FIXED, Value: 0)	CAE_INVALID	NUMBER	UINT1	N/A	N/A	N/A	NONE	PRIVATE
688	anu_display_27_text	text of ANU element, (Precision: N/A) , (Accuracy: N/A) , (Default Type: FIXED, Value:)	CAE_INVALID	NUMBER	STRING	N/A	N/A	N/A	NONE	PRIVATE
689	anu_display_27_code	ANU display properties (flash, reverse), (Precision: N/A) , (Accuracy: N/A) , (Default Type: FIXED, Value: 0)	CAE_INVALID	NUMBER	UINT1	N/A	N/A	N/A	NONE	PRIVATE
690	anu_display_28_text	text of ANU element, (Precision: N/A) , (Accuracy: N/A) , (Default Type: FIXED, Value: SAEX)	CAE_INVALID	NUMBER	STRING	N/A	N/A	N/A	NONE	PRIVATE

	A	B	C	D	E	F	G	H	I	J
691	anu_display_28_code	ANU display properties (flash, reverse), (Precision: N/A) , (Accuracy: N/A) , (Default Type: FIXED, Value: 0)	CAE_INVALID	NUMBER	UINT1	N/A	N/A	N/A	NONE	PRIVATE
692	anu_display_29_text	text of ANU element, (Precision: N/A) , (Accuracy: N/A) , (Default Type: FIXED, Value: LOTW)	CAE_INVALID	NUMBER	STRING	N/A	N/A	N/A	NONE	PRIVATE
693	anu_display_29_code	ANU display properties (flash, reverse), (Precision: N/A) , (Accuracy: N/A) , (Default Type: FIXED, Value: 0)	CAE_INVALID	NUMBER	UINT1	N/A	N/A	N/A	NONE	PRIVATE
694	anu_display_30_text	text of ANU element, (Precision: N/A) , (Accuracy: N/A) , (Default Type: FIXED, Value: FFU)	CAE_INVALID	NUMBER	STRING	N/A	N/A	N/A	NONE	PRIVATE
695	anu_display_30_code	ANU display properties (flash, reverse), (Precision: N/A) , (Accuracy: N/A) , (Default Type: FIXED, Value: 0)	CAE_INVALID	NUMBER	UINT1	N/A	N/A	N/A	NONE	PRIVATE
696	anu_display_31_text	text of ANU element, (Precision: N/A) , (Accuracy: N/A) , (Default Type: FIXED, Value:)	CAE_INVALID	NUMBER	STRING	N/A	N/A	N/A	NONE	PRIVATE
697	anu_display_31_code	ANU display properties (flash, reverse), (Precision: N/A) , (Accuracy: N/A) , (Default Type: FIXED, Value: 0)	CAE_INVALID	NUMBER	UINT1	N/A	N/A	N/A	NONE	PRIVATE
698	anu_display_32_text	text of ANU element, (Precision: N/A) , (Accuracy: N/A) , (Default Type: FIXED, Value:)	CAE_INVALID	NUMBER	STRING	N/A	N/A	N/A	NONE	PRIVATE
699	anu_display_32_code	ANU display properties (flash, reverse), (Precision: N/A) , (Accuracy: N/A) , (Default Type: FIXED, Value: 0)	CAE_INVALID	NUMBER	UINT1	N/A	N/A	N/A	NONE	PRIVATE
700	anu_display_33_text	text of ANU element, (Precision: N/A) , (Accuracy: N/A) , (Default Type: FIXED, Value: SPEX)	CAE_INVALID	NUMBER	STRING	N/A	N/A	N/A	NONE	PRIVATE
701	anu_display_33_code	ANU display properties (flash, reverse), (Precision: N/A) , (Accuracy: N/A) , (Default Type: FIXED, Value: 0)	CAE_INVALID	NUMBER	UINT1	N/A	N/A	N/A	NONE	PRIVATE
702	anu_display_34_text	text of ANU element, (Precision: N/A) , (Accuracy: N/A) , (Default Type: FIXED, Value:)	CAE_INVALID	NUMBER	STRING	N/A	N/A	N/A	NONE	PRIVATE
703	anu_display_34_code	ANU display properties (flash, reverse), (Precision: N/A) , (Accuracy: N/A) , (Default Type: FIXED, Value: 0)	CAE_INVALID	NUMBER	UINT1	N/A	N/A	N/A	NONE	PRIVATE
704	anu_display_35_text	text of ANU element, (Precision: N/A) , (Accuracy: N/A) , (Default Type: FIXED, Value:)	CAE_INVALID	NUMBER	STRING	N/A	N/A	N/A	NONE	PRIVATE
705	anu_display_35_code	ANU display properties (flash, reverse), (Precision: N/A) , (Accuracy: N/A) , (Default Type: FIXED, Value: 0)	CAE_INVALID	NUMBER	UINT1	N/A	N/A	N/A	NONE	PRIVATE
706	anu_display_36_text	text of ANU element, (Precision: N/A) , (Accuracy: N/A) , (Default Type: FIXED, Value:)	CAE_INVALID	NUMBER	STRING	N/A	N/A	N/A	NONE	PRIVATE

	A	B	C	D	E	F	G	H	I	J
707	anu_display_36_code	ANU display properties (flash, reverse), (Precision: N/A) , (Accuracy: N/A) , (Default Type: FIXED, Value: 0)	CAE_INVALID	NUMBER	UINT1	N/A	N/A	N/A	NONE	PRIVATE
708	anu_display_37_text	text of ANU element, (Precision: N/A) , (Accuracy: N/A) , (Default Type: FIXED, Value:)	CAE_INVALID	NUMBER	STRING	N/A	N/A	N/A	NONE	PRIVATE
709	anu_display_37_code	ANU display properties (flash, reverse), (Precision: N/A) , (Accuracy: N/A) , (Default Type: FIXED, Value: 0)	CAE_INVALID	NUMBER	UINT1	N/A	N/A	N/A	NONE	PRIVATE
710	anu_display_38_text	text of ANU element, (Precision: N/A) , (Accuracy: N/A) , (Default Type: FIXED, Value:)	CAE_INVALID	NUMBER	STRING	N/A	N/A	N/A	NONE	PRIVATE
711	anu_display_38_code	ANU display properties (flash, reverse), (Precision: N/A) , (Accuracy: N/A) , (Default Type: FIXED, Value: 0)	CAE_INVALID	NUMBER	UINT1	N/A	N/A	N/A	NONE	PRIVATE
712	anu_display_39_text	text of ANU element, (Precision: N/A) , (Accuracy: N/A) , (Default Type: FIXED, Value: TEMP)	CAE_INVALID	NUMBER	STRING	N/A	N/A	N/A	NONE	PRIVATE
713	anu_display_39_code	ANU display properties (flash, reverse), (Precision: N/A) , (Accuracy: N/A) , (Default Type: FIXED, Value: 0)	CAE_INVALID	NUMBER	UINT1	N/A	N/A	N/A	NONE	PRIVATE
714	csys_bit_timeout	built-in test completion timeout, (Precision: N/A) , (Accuracy: N/A) , (Default Type: FIXED, Value: 10)	CAE_INVALID	NUMBER	INT4	seconds	N/A	N/A	NONE	PRIVATE
715	csys_crl_size	MCP CR-Log-File size (in bytes), (Precision: N/A) , (Accuracy: N/A) , (Default Type: FIXED, Value: 0x0000ffff)	CAE_INVALID	NUMBER	UINT4	N/A	N/A	N/A	NONE	PRIVATE
716	csys_switch_off_timeout	timeout of TAMCP switch-off cmd, (Precision: N/A) , (Accuracy: N/A) , (Default Type: FIXED, Value: 50)	CAE_INVALID	NUMBER	INT4	seconds	N/A	N/A	NONE	PRIVATE
717	mccsh_ping_timeout	ping timeout from MCCS, (Precision: N/A) , (Accuracy: N/A) , (Default Type: FIXED, Value: 100000)	CAE_INVALID	NUMBER	INT4	seconds	N/A	N/A	NONE	PRIVATE
718	pdu_wd_timeout_ini	initial PDU watchdog timeout, (Precision: N/A) , (Accuracy: N/A) , (Default Type: FIXED, Value: 30)	CAE_INVALID	NUMBER	INT4	seconds	N/A	N/A	NONE	PRIVATE
719	pdu_wd_timeout	PDU watchdog timeout, (Precision: N/A) , (Accuracy: N/A) , (Default Type: FIXED, Value: 10)	CAE_INVALID	NUMBER	INT4	seconds	N/A	N/A	NONE	PRIVATE
720	pdu_can_version	PDU CAN controller version ID, (Precision: N/A) , (Accuracy: N/A) , (Default Type: FIXED, Value: 0x10120000)	CAE_INVALID	NUMBER	UINT4	N/A	N/A	N/A	NONE	PRIVATE
721	pdu_can_nsr_timeout	timeout of CAN NSR-response, (Precision: N/A) , (Accuracy: N/A) , (Default Type: FIXED, Value: 1)	CAE_INVALID	NUMBER	INT4	seconds	N/A	N/A	NONE	PRIVATE
722	pdu_pow_bus_volt_gain	gain for bus voltage calculation, (Precision: N/A) , (Accuracy: N/A) , (Default Type: FIXED, Value: 0.0091552734375)	CAE_INVALID	NUMBER	FLOAT4	N/A	N/A	N/A	NONE	PRIVATE

	A	B	C	D	E	F	G	H	I	J
723	pdu_pow_bus_volt_offset	offset for bus voltage calculation, (Precision: N/A) , (Accuracy: N/A) , (Default Type: FIXED, Value: 0)	CAE_INVALID	NUMBER	FLOAT4	volts	N/A	N/A	NONE	PRIVATE
724	pdu_pow_bus_curr_gain	gain for bus current calculation, (Precision: N/A) , (Accuracy: N/A) , (Default Type: FIXED, Value: 0.0030517578125)	CAE_INVALID	NUMBER	FLOAT4	N/A	N/A	N/A	NONE	PRIVATE
725	pdu_pow_bus_curr_offset	offset for bus current calculation, (Precision: N/A) , (Accuracy: N/A) , (Default Type: FIXED, Value: -0.1500000)	CAE_INVALID	NUMBER	FLOAT4	amperes	N/A	N/A	NONE	PRIVATE
726	pdu_ups_bus_volt_gain	gain for UPS voltage calculation, (Precision: N/A) , (Accuracy: N/A) , (Default Type: FIXED, Value: 0.0091552734375)	CAE_INVALID	NUMBER	FLOAT4	N/A	N/A	N/A	NONE	PRIVATE
727	pdu_ups_bus_volt_offset	offset for UPS voltage calculation, (Precision: N/A) , (Accuracy: N/A) , (Default Type: FIXED, Value: 0)	CAE_INVALID	NUMBER	FLOAT4	volts	N/A	N/A	NONE	PRIVATE
728	pdu_ups_bus_curr_gain	gain for UPS current calculation, (Precision: N/A) , (Accuracy: N/A) , (Default Type: FIXED, Value: 0.0030517578125)	CAE_INVALID	NUMBER	FLOAT4	N/A	N/A	N/A	NONE	PRIVATE
729	pdu_ups_bus_curr_offset	offset for UPS current calculation, (Precision: N/A) , (Accuracy: N/A) , (Default Type: FIXED, Value: 0)	CAE_INVALID	NUMBER	FLOAT4	amperes	N/A	N/A	NONE	PRIVATE
730	pwc_can_version	PWC CAN controller version, (Precision: N/A) , (Accuracy: N/A) , (Default Type: FIXED, Value: 0x10120000)	CAE_INVALID	NUMBER	UINT4	N/A	N/A	N/A	NONE	PRIVATE
731	pwc_can_nsr_timeout	timeout of CAN NSR-response, (Precision: N/A) , (Accuracy: N/A) , (Default Type: FIXED, Value: 1)	CAE_INVALID	NUMBER	INT4	seconds	N/A	N/A	NONE	PRIVATE
732	pwc_cnt_limit	loop count limit, (Precision: N/A) , (Accuracy: N/A) , (Default Type: FIXED, Value: 30)	CAE_INVALID	NUMBER	UINT4	N/A	N/A	N/A	NONE	PRIVATE
733	pwc_press_limit	diff. pressure limit, (Precision: N/A) , (Accuracy: N/A) , (Default Type: FIXED, Value: 30)	CAE_INVALID	NUMBER	FLOAT4	millibars	N/A	N/A	NONE	PRIVATE
734	pwc_press_calc_gain	pressure calc. gain, (Precision: N/A) , (Accuracy: N/A) , (Default Type: FIXED, Value: 0.20996)	CAE_INVALID	NUMBER	FLOAT4	N/A	N/A	N/A	NONE	PRIVATE
735	pwc_press_calc_off	pressure calc. offset, (Precision: N/A) , (Accuracy: N/A) , (Default Type: FIXED, Value: 100.70)	CAE_INVALID	NUMBER	FLOAT4	millibars	N/A	N/A	NONE	PRIVATE
736	pwc_bpv_open_time	bypass valve open time duration, (Precision: N/A) , (Accuracy: N/A) , (Default Type: FIXED, Value: 10000)	CAE_INVALID	NUMBER	INT4	milliseconds	N/A	N/A	NONE	PRIVATE
737	pwc_bpv_open_timeout	bypass valve open timeout, (Precision: N/A) , (Accuracy: N/A) , (Default Type: FIXED, Value: 1000)	CAE_INVALID	NUMBER	INT4	milliseconds	N/A	N/A	NONE	PRIVATE
738	pwc_bpv_close_timeout	bypass valve close timeout, (Precision: N/A) , (Accuracy: N/A) , (Default Type: FIXED, Value: 1000)	CAE_INVALID	NUMBER	INT4	milliseconds	N/A	N/A	NONE	PRIVATE

	A	B	C	D	E	F	G	H	I	J
739	pwc_gv_open_timeout	timeout for gate valve open, (Precision: N/A) , (Accuracy: N/A) , (Default Type: FIXED, Value: 5000)	CAE_INVALID	NUMBER	INT4	milliseconds	N/A	N/A	NONE	PRIVATE
740	pwc_gv_close_timeout	timeout for gate valve close, (Precision: N/A) , (Accuracy: N/A) , (Default Type: FIXED, Value: 5000)	CAE_INVALID	NUMBER	INT4	milliseconds	N/A	N/A	NONE	PRIVATE
741	smh_wd_timeout	SCS watchdog timeout, (Precision: N/A) , (Accuracy: N/A) , (Default Type: FIXED, Value: 10)	CAE_INVALID	NUMBER	INT4	seconds	N/A	N/A	NONE	PRIVATE
742	smh_health_req_rate	health request send rate, (Precision: N/A) , (Accuracy: N/A) , (Default Type: FIXED, Value: 2)	CAE_INVALID	NUMBER	INT4	seconds	N/A	N/A	NONE	PRIVATE
743	tch_wd_timeout	TRC watchdog timeout, (Precision: N/A) , (Accuracy: N/A) , (Default Type: FIXED, Value: 10)	CAE_INVALID	NUMBER	INT4	seconds	N/A	N/A	NONE	PRIVATE
744	tsh_wd_timeout	TASCU watchdog timeout, (Precision: N/A) , (Accuracy: N/A) , (Default Type: FIXED, Value: 10)	CAE_INVALID	NUMBER	INT4	seconds	N/A	N/A	NONE	PRIVATE
745	iqc_exec_timeout	IQC cmd execution timeout, (Precision: N/A) , (Accuracy: N/A) , (Default Type: FIXED, Value: 20)	CAE_INVALID	NUMBER	INT4	seconds	N/A	N/A	NONE	PRIVATE
746	iqc_m2_r_ref_pos	M2 vertex r position, (Precision: N/A) , (Accuracy: N/A) , (Default Type: FIXED, Value: 0.0)	CAE_INVALID	NUMBER	FLOAT4	millimeters	N/A	N/A	NONE	PRIVATE
747	iqc_m2_s_ref_pos	M2 vertex s position, (Precision: N/A) , (Accuracy: N/A) , (Default Type: FIXED, Value: 0.0)	CAE_INVALID	NUMBER	FLOAT4	millimeters	N/A	N/A	NONE	PRIVATE
748	iqc_m2_t_ref_pos	M2 vertex t position, (Precision: N/A) , (Accuracy: N/A) , (Default Type: FIXED, Value: 38.6)	CAE_INVALID	NUMBER	FLOAT4	millimeters	N/A	N/A	NONE	PRIVATE
749	iqc_m2_l_ref_rot	M2 vertex EL (unused up to now), (Precision: N/A) , (Accuracy: N/A) , (Default Type: FIXED, Value: 0.0)	CAE_INVALID	NUMBER	FLOAT4	N/A	N/A	N/A	NONE	PRIVATE
750	iqc_m2_m_ref_rot	M2 vertex XEL (unused up to now), (Precision: N/A) , (Accuracy: N/A) , (Default Type: FIXED, Value: 0.0)	CAE_INVALID	NUMBER	FLOAT4	N/A	N/A	N/A	NONE	PRIVATE
751	iqc_m2_n_ref_rot	M2 vertex LOS (unused up to now), (Precision: N/A) , (Accuracy: N/A) , (Default Type: FIXED, Value: 1.0)	CAE_INVALID	NUMBER	FLOAT4	N/A	N/A	N/A	NONE	PRIVATE
752	**Command**	**Description**	**NeedDate**	**Visibility**	**CmdVers**	**DestID**	**CmdID**			
753	ta_mcp.mcp_config_save	saves the currently set configuration parameters to the configuration file	CAE_INVALID	PUBLIC	1	0	65282			
754	**Command**	**Description**	**NeedDate**	**Visibility**	**CmdVers**	**DestID**	**CmdID**			
755	ta_mcp.mcp_config_load	loads the configuration parameters from the configuration file	CAE_INVALID	PUBLIC	1	0	65283			
756	**Command**	**Description**	**NeedDate**	**Visibility**	**CmdVers**	**DestID**	**CmdID**			
757	ta_mcp.mcp_config_get	read the currently set configuration parameters from the MCP	CAE_INVALID	PUBLIC	1	0	65284			

	A	B	C	D	E	F	G	H	I	J
758	**ta_pos** **List of TA Position commands**									
759	**Command**	**Description**	**NeedDate**	**Visibility**						
760	ta_pos.resume	Enables the application	CAE_FOC	PUBLIC						
761	**Command**	**Description**	**NeedDate**	**Visibility**						
762	ta_pos.suspend	Suspends the application	CAE_FOC	PUBLIC						
763	**Command**	**Description**	**NeedDate**	**Visibility**						
764	ta_pos.set	Set the value for a mode or parameter	CAE_ENG_BUILD_3	PUBLIC						
765	**Argument**	**Arg_Description**	**NeedDate**	**Form**	**Representation**	**units**	**LoLimit**	**HiLimit**	**ValueType**	**Visibility**
766	ANY	The keyword of this argument is the name of the item or array to set; the value supplied in this argument is the new value for the item or specified array element.	CAE_INVALID	NUMBER	STRING	N/A			INDEXED	PUBLIC
767	**Command**	**Description**	**NeedDate**	**Visibility**						
768	ta_pos.verbose	Enables debugging output	CAE_IMMEDIATE	PUBLIC						
769	**Command**	**Description**	**NeedDate**	**Visibility**						
770	ta_pos.quiet	Suspends debugging output	CAE_IMMEDIATE	PUBLIC						
771	**Command**	**Description**	**NeedDate**	**Visibility**						
772	ta_pos.autofocus	Autofocus the FPI trombone	CAE_ENG_BUILD_3	PUBLIC						
773	**Argument**	**Arg_Description**	**NeedDate**	**Form**	**Representation**	**units**	**LoLimit**	**HiLimit**	**ValueType**	**Visibility**
774	aoi	Star to measure seeing on, (Default Type: SETTABLE, Value: ta_pos.autofocus.aoi)	CAE_INVALID	NUMBER	STRING	N/A			AOI_SET	PUBLIC
775	timeout	Maximum time allowed for command, (Default Type: SETTABLE_REQUIRED_ONCE, Value: ta_pos.autofocus.timeout)	CAE_INVALID	NUMBER	UINT4	seconds	1	90	NONE	PUBLIC
776	**Command**	**Description**	**NeedDate**	**Visibility**						
777	ta_pos.trc_boresight	Set the trc boresight to the sibs position	CAE_IMMEDIATE	PUBLIC						
778	**Command**	**Description**	**NeedDate**	**Visibility**						
779	ta_pos.fpi_focus	Move the FPI trombone	CAE_ENG_BUILD_3	PUBLIC						
780	**Argument**	**Arg_Description**	**NeedDate**	**Form**	**Representation**	**units**	**LoLimit**	**HiLimit**	**ValueType**	**Visibility**
781	position	Absolute focus position	CAE_ENG_BUILD_4	NUMBER	FLOAT8	millimeters	-300	900	SET	PUBLIC
782	offset	Relative focus position	CAE_IOC	NUMBER	FLOAT8	millimeters	-1200	1200	SET	PUBLIC
783	back_focus	Use SI-supplied back focus position?, (Default Type: FIXED, Value: no) , [ENUM: (0: no) (1: yes)]	CAE_IOC	ENUM	BOOL4	N/A			NONE	PUBLIC
784	**Command**	**Description**	**NeedDate**	**Visibility**						
785	ta_pos.goto	Absolute move telescope to supplied position	CAE_ENG_BUILD_3	PUBLIC						
786	**Argument**	**Arg_Description**	**NeedDate**	**Form**	**Representation**	**units**	**LoLimit**	**HiLimit**	**ValueType**	**Visibility**
787	pos	Name of the Position to go to	CAE_INVALID	NUMBER	STRING	N/A			POSITION	PUBLIC
788	aoi	TA number for AOI to move to	CAE_IOC	NUMBER	INT4	N/A	1	8	NONE	PUBLIC
789	track_mode	Enable tracking?, (Default Type: CALCULATED, Value:) , [ENUM: (0: none) (0: off) (1: centroid) (3: rof) (4: limb) (7: on)]	CAE_INVALID	ENUM	STRING	N/A			NONE	PUBLIC
790	los	Desired LOS position	CAE_INVALID	NUMBER	FLOAT8	degrees	-3	3	SET	PUBLIC

	A	B	C	D	E	F	G	H	I	J
791	vaa	Desired Vertical Aperture Angle	CAE_IOC	NUMBER	FLOAT8	degrees	-180	360	SET	PUBLIC
792	rof	Desired Rotation of Field	CAE_IOC	NUMBER	FLOAT8	degrees	-180	360	SET	PUBLIC
793	accuracy	Desired target accuracy	CAE_IOC	NUMBER	FLOAT8	degrees	0	3	SET	PUBLIC
794	reference	Record the specified Position as a reference	CAE_IOC	NUMBER	STRING	N/A			POSITION	PUBLIC
795	offset	Specify an offset from the supplied position	CAE_IOC	NUMBER	STRING	N/A			OFFSET	PUBLIC
796	**Command**	**Description**	**NeedDate**	**Visibility**						
797	ta_pos.offset	Relative move the telescope to supplied offset	CAE_IOC	PUBLIC						
798	**Argument**	**Arg_Description**	**NeedDate**	**Form**	**Representation**	**units**	**LoLimit**	**HiLimit**	**ValueType**	**Visibility**
799	pos	Name of the Position to go to	CAE_INVALID	NUMBER	STRING	N/A			POSITION	PUBLIC
800	delta	Specify an offset from the current position	CAE_INVALID	NUMBER	STRING	N/A			OFFSET	PUBLIC
801	equinox	Equinox date for the deltas, (Default Type: FIXED, Value: j2000)	CAE_INVALID	NUMBER	STRING	julian years			NONE	PUBLIC
802	delta_ra	Offset along the RA axis	CAE_INVALID	NUMBER	FLOAT8	arcseconds			SET	PUBLIC
803	delta_dec	Offset along the declination axis	CAE_INVALID	NUMBER	FLOAT8	arcseconds			SET	PUBLIC
804	delta_lambda	Offset along the ecliptic longitude axis	CAE_IOC	NUMBER	FLOAT8	degrees			SET	PUBLIC
805	delta_beta	Offset along the ecliptic latitude axis	CAE_IOC	NUMBER	FLOAT8	degrees			SET	PUBLIC
806	delta_el	Offset along the elevation axis	CAE_IOC	NUMBER	FLOAT8	degrees			SET	PUBLIC
807	delta_xel	Offset along the cross-elevation axis	CAE_IOC	NUMBER	FLOAT8	degrees			SET	PUBLIC
808	delta_los	Offset along the Line of Sight axis	CAE_IOC	NUMBER	FLOAT8	degrees			SET	PUBLIC
809	delta_xwfi	Offset along the X axis	CAE_IOC	NUMBER	FLOAT8	pixels			SET_NO_CONVERT	PUBLIC
810	delta_ywfi	Offset along the Y axis	CAE_IOC	NUMBER	FLOAT8	pixels			SET_NO_CONVERT	PUBLIC
811	delta_xffi	Offset along the X axis	CAE_IOC	NUMBER	FLOAT8	pixels			SET_NO_CONVERT	PUBLIC
812	delta_yffi	Offset along the Y axis	CAE_IOC	NUMBER	FLOAT8	pixels			SET_NO_CONVERT	PUBLIC
813	delta_xfpi	Offset along the X axis	CAE_IOC	NUMBER	FLOAT8	pixels			SET_NO_CONVERT	PUBLIC
814	delta_yfpi	Offset along the Y axis	CAE_IOC	NUMBER	FLOAT8	pixels			SET_NO_CONVERT	PUBLIC
815	delta_xsi	Offset along the X axis	CAE_IOC	NUMBER	FLOAT8	pixels			SET_NO_CONVERT	PUBLIC
816	delta_ysi	Offset along the Y axis	CAE_IOC	NUMBER	FLOAT8	pixels			SET_NO_CONVERT	PUBLIC
817	delta_lii	Offset along the galactic longitude axis	CAE_IOC	NUMBER	FLOAT8	degrees			SET	PUBLIC
818	delta_bii	Offset along the galactic latitude axis	CAE_IOC	NUMBER	FLOAT8	degrees			SET	PUBLIC
819	delta_lsg	Offset along the super-galactic longitude axis	CAE_IOC	NUMBER	FLOAT8	degrees			SET	PUBLIC
820	delta_bsg	Offset along the super-galactic latitude axis	CAE_IOC	NUMBER	FLOAT8	degrees			SET	PUBLIC
821	**Command**	**Description**	**NeedDate**	**Visibility**						
822	ta_pos.scan	Command the telescope to move until told otherwise	CAE_IOC	PUBLIC						

	A	B	C	D	E	F	G	H	I	J
823	**Argument**	**Arg_Description**	**NeedDate**	**Form**	**Representation**	**units**	**LoLimit**	**HiLimit**	**ValueType**	**Visibility**
824	start_angle	Angle to the coordinate system to maintain during the scan	CAE_INVALID	NUMBER	FLOAT8	degrees			NONE	PUBLIC
825	scan_rate	Speed of the telescope along the start_angle	CAE_INVALID	NUMBER	FLOAT8	arcseconds per second	0	3609.63411	SET	PUBLIC
826	delta_ra	Offset along the RA axis	CAE_INVALID	NUMBER	FLOAT8	arcseconds			SET	PUBLIC
827	delta_dec	Offset along the declination axis	CAE_INVALID	NUMBER	FLOAT8	arcseconds			SET	PUBLIC
828	delta_el	Offset along the elevation axis	CAE_IOC	NUMBER	FLOAT8	degrees			SET	PUBLIC
829	delta_xel	Offset along the cross-elevation axis	CAE_IOC	NUMBER	FLOAT8	degrees			SET	PUBLIC
830	delta_los	Offset along the Line of Sight axis	CAE_IOC	NUMBER	FLOAT8	degrees			SET	PUBLIC
831	delta_xwfi	Offset along the X axis	CAE_IOC	NUMBER	FLOAT8	pixels			SET_NO_CONVERT	PUBLIC
832	delta_ywfi	Offset along the Y axis	CAE_IOC	NUMBER	FLOAT8	pixels			SET_NO_CONVERT	PUBLIC
833	delta_xffi	Offset along the X axis	CAE_IOC	NUMBER	FLOAT8	pixels			SET_NO_CONVERT	PUBLIC
834	delta_yffi	Offset along the Y axis	CAE_IOC	NUMBER	FLOAT8	pixels			SET_NO_CONVERT	PUBLIC
835	delta_xfpi	Offset along the X axis	CAE_IOC	NUMBER	FLOAT8	pixels			SET_NO_CONVERT	PUBLIC
836	delta_yfpi	Offset along the Y axis	CAE_IOC	NUMBER	FLOAT8	pixels	0		SET_NO_CONVERT	PUBLIC
837	delta_xsi	Offset along the X axis	CAE_IOC	NUMBER	FLOAT8	pixels			SET_NO_CONVERT	PUBLIC
838	delta_ysi	Offset along the Y axis	CAE_IOC	NUMBER	FLOAT8	pixels			SET_NO_CONVERT	PUBLIC
839	delta_lambda	Offset along the ecliptic longitude axis	CAE_IOC	NUMBER	FLOAT8	degrees			SET	PUBLIC
840	delta_beta	Offset along the ecliptic latitude axis	CAE_IOC	NUMBER	FLOAT8	degrees			SET	PUBLIC
841	delta_lii	Offset along the galactic longitude axis	CAE_IOC	NUMBER	FLOAT8	degrees			SET	PUBLIC
842	delta_bii	Offset along the galactic latitude axis	CAE_IOC	NUMBER	FLOAT8	degrees			SET	PUBLIC
843	delta_lsg	Offset along the super-galactic longitude axis	CAE_IOC	NUMBER	FLOAT8	degrees			SET	PUBLIC
844	delta_bsg	Offset along the super-galactic latitude axis	CAE_IOC	NUMBER	FLOAT8	degrees			SET	PUBLIC
845	ra_rate	Speed of the telescope along the Right Ascension axis, (Default Type: FIXED, Value: 0.0)	CAE_INVALID	NUMBER	FLOAT8	arcseconds per second	-3609.634	3609.63411	SET	PUBLIC
846	dec_rate	Speed of the telescope along the declination axis, (Default Type: FIXED, Value: 0.0)	CAE_INVALID	NUMBER	FLOAT8	arcseconds per second	-3609.634	3609.63411	SET	PUBLIC
847	el_rate	Speed of the telescope along the elevation axis, (Default Type: FIXED, Value: 0.0)	CAE_INVALID	NUMBER	FLOAT8	arcseconds per second	-3609.634	3609.63411	SET	PUBLIC
848	xel_rate	Speed of the telescope along the cross-elevation axis, (Default Type: FIXED, Value: 0.0)	CAE_INVALID	NUMBER	FLOAT8	arcseconds per second	-3609.634	3609.63411	SET	PUBLIC
849	los_rate	Speed of the telescope along the Line of Sight axis, (Default Type: FIXED, Value: 0.0)	CAE_INVALID	NUMBER	FLOAT8	arcseconds per second	-3609.634	3609.63411	SET	PUBLIC

	A	B	C	D	E	F	G	H	I	J
850	xwfi_rate	Speed of the telescope along the X axis, (Default Type: FIXED, Value: 0.0)	CAE_INVALID	NUMBER	FLOAT8	pixels per second			SET_NO_CONVERT	PUBLIC
851	ywfi_rate	Speed of the telescope along the Y axis, (Default Type: FIXED, Value: 0.0)	CAE_INVALID	NUMBER	FLOAT8	pixels per second			SET_NO_CONVERT	PUBLIC
852	xffi_rate	Speed of the telescope along the X axis, (Default Type: FIXED, Value: 0.0)	CAE_INVALID	NUMBER	FLOAT8	pixels per second			SET_NO_CONVERT	PUBLIC
853	yffi_rate	Speed of the telescope along the Y axis, (Default Type: FIXED, Value: 0.0)	CAE_INVALID	NUMBER	FLOAT8	pixels per second			SET_NO_CONVERT	PUBLIC
854	xfpi_rate	Speed of the telescope along the X axis, (Default Type: FIXED, Value: 0.0)	CAE_INVALID	NUMBER	FLOAT8	pixels per second			SET_NO_CONVERT	PUBLIC
855	yfpi_rate	Speed of the telescope along the Y axis, (Default Type: FIXED, Value: 0.0)	CAE_INVALID	NUMBER	FLOAT8	pixels per second			SET_NO_CONVERT	PUBLIC
856	xsi_rate	Speed of the telescope along the X axis, (Default Type: FIXED, Value: 0.0)	CAE_INVALID	NUMBER	FLOAT8	pixels per second			SET_NO_CONVERT	PUBLIC
857	ysi_rate	Speed of the telescope along the Y axis, (Default Type: FIXED, Value: 0.0)	CAE_INVALID	NUMBER	FLOAT8	pixels per second			SET_NO_CONVERT	PUBLIC
858	lambda_rate	Speed of the telescope along the ecliptic longitude axis, (Default Type: FIXED, Value: 0.0)	CAE_INVALID	NUMBER	FLOAT8	arcseconds per second	-3609.634	3609.63411	SET	PUBLIC
859	beta_rate	Speed of the telescope along the ecliptic latitude axis, (Default Type: FIXED, Value: 0.0)	CAE_INVALID	NUMBER	FLOAT8	arcseconds per second	-3609.634	3609.63411	SET	PUBLIC
860	lii_rate	Speed of the telescope along the galactic longitude axis, (Default Type: FIXED, Value: 0.0)	CAE_INVALID	NUMBER	FLOAT8	arcseconds per second	-3609.634	3609.63411	SET	PUBLIC
861	bii_rate	Speed of the telescope along the galactic latitude axis, (Default Type: FIXED, Value: 0.0)	CAE_INVALID	NUMBER	FLOAT8	arcseconds per second	-3609.634	3609.63411	SET	PUBLIC
862	lsg_rate	Speed of the telescope along the super-galactic longitude axis, (Default Type: FIXED, Value: 0.0)	CAE_INVALID	NUMBER	FLOAT8	arcseconds per second	-3609.634	3609.63411	SET	PUBLIC
863	bsg_rate	Speed of the telescope along the super-galactic latitude axis, (Default Type: FIXED, Value: 0.0)	CAE_INVALID	NUMBER	FLOAT8	arcseconds per second	-3609.634	3609.63411	SET	PUBLIC
864	coord_sys	Coordinate system for start_angle, (Default Type: SETTABLE, Value: ta_pos.scan.coord_sys) , [ENUM: (0: ERF) (1: TARF) (2: WFIRF) (3: FFIRF) (4: FPIRF) (5: SIRF) (6: EcRF) (7: GalRF) (8: SGLRF)]	CAE_INVALID	ENUM	STRING	N/A			NONE	PUBLIC
865	equinox	Equinox date, (Default Type: FIXED, Value: j2000)	CAE_INVALID	NUMBER	STRING	julian years			NONE	PUBLIC
866	**Command**	**Description**	**NeedDate**	**Visibility**						
867	ta_pos.stop	Command the telescope to halt any movement	CAE_ENG_BUILD_3	PUBLIC						
868	**Command**	**Description**	**NeedDate**	**Visibility**						
869	ta_pos.rewind	Rewind the telescope around LOS axis	CAE_IMMEDIATE	PUBLIC						
870	**Argument**	**Arg_Description**	**NeedDate**	**Form**	**Representation**	**units**	**LoLimit**	**HiLimit**	**ValueType**	**Visibility**
871	los	TARF->IRF coordinate to rewind to, (Default Type: CALCULATED, Value:)	CAE_INVALID	NUMBER	FLOAT8	degrees	-3	3	SET	PUBLIC

	A	B	C	D	E	F	G	H	I	J
872	vaa	TARF->HRF angle to rewind to, (Default Type: CALCULATED, Value:)	CAE_IOC	NUMBER	FLOAT8	degrees			SET	PUBLIC
873	rof	TARF->ERF angle to rewind to, (Default Type: CALCULATED, Value:)	CAE_IOC	NUMBER	FLOAT8	degrees			SET	PUBLIC
874	center	Name of the Position to rotate around, (Default Type: SETTABLE, Value: ta_pos.rewind.center)	CAE_IOC	NUMBER	STRING	N/A			POSITION	PUBLIC
875	los_margin	Buffer between soft and hard LOS limits, (Default Type: SETTABLE, Value: ta_pos.rewind.los_margin)	CAE_INVALID	NUMBER	FLOAT8	degrees	0	3	SET	PUBLIC
876	chop_sys	Reference frame to hold constant for chopping, (Default Type: SETTABLE, Value: ta_pos.rewind.chop_sys) , [ENUM: (0: none) (1: erf) (2: tarf)]	CAE_IOC	ENUM	STRING	N/A			NONE	PUBLIC
877	nod_sys	Reference frame to hold constant for nodding, (Default Type: SETTABLE, Value: ta_pos.rewind.nod_sys) , [ENUM: (0: none) (1: erf) (2: tarf)]	CAE_IOC	ENUM	STRING	N/A			NONE	PUBLIC
878	quantum_time	Time between opportunities to rewind, (Default Type: SETTABLE, Value: ta_pos.rewind.quantum_time)	CAE_IOC	NUMBER	FLOAT8	seconds	0		SET	PUBLIC
879	total_time	Maximum time observation can last, (Default Type: CALCULATED, Value:)	CAE_IOC	NUMBER	FLOAT8	minutes	0		SET	PUBLIC
880	**Command**	**Description**	**NeedDate**	**Visibility**						
881	ta_pos.tweak_define	Set the current tweaker parameters	CAE_ENG_BUILD_3	PUBLIC						
882	**Argument**	**Arg_Description**	**NeedDate**	**Form**	**Representation**	**units**	**LoLimit**	**HiLimit**	**ValueType**	**Visibility**
883	coord_sys	Reference frame or coordinate system, (Default Type: SETTABLE_REQUIRED_ONCE, Value: ta_pos.tweak.sys) , [ENUM: (0: IRF) (1: TAICRF) (2: ERF) (3: SIRF) (4: FPIRF) (5: WFIRF) (6: FFIRF)]	CAE_INVALID	ENUM	STRING	N/A			NONE	PUBLIC
884	mode	Type of motion, (Default Type: SETTABLE_REQUIRED_ONCE, Value: ta_pos.tweak.mode) , [ENUM: (1: scan) (2: offset) (4: step)]	CAE_INVALID	ENUM	STRING	N/A			NONE	PUBLIC
885	x	Horizontal motion parameter, (Default Type: CALCULATED, Value:)	CAE_INVALID	NUMBER	FLOAT8	appropriate coordinate units			SET_NO_CONVERT	PUBLIC
886	y	Vertical motion parameter, (Default Type: CALCULATED, Value:)	CAE_INVALID	NUMBER	FLOAT8	appropriate coordinate units			SET_NO_CONVERT	PUBLIC
887	**Command**	**Description**	**NeedDate**	**Visibility**						
888	ta_pos.tweak	Tweak the telescope position	CAE_ENG_BUILD_3	PUBLIC						
889	**Argument**	**Arg_Description**	**NeedDate**	**Form**	**Representation**	**units**	**LoLimit**	**HiLimit**	**ValueType**	**Visibility**
890	x	+1, 0, or -1 depending on button push, (Default Type: FIXED, Value: 0)	CAE_INVALID	NUMBER	INT4	unity			NONE	PUBLIC
891	y	+1, 0, or -1 depending on button push, (Default Type: FIXED, Value: 0)	CAE_INVALID	NUMBER	INT4	unity			NONE	PUBLIC
892	**Command**	**Description**	**NeedDate**	**Visibility**						

	A	B	C	D	E	F	G	H	I	J
893	ta_pos.track	Tell the TA to track (and how)	CAE_IMMEDIATE	PUBLIC						
894	**Argument**	**Arg_Description**	**NeedDate**	**Form**	**Representation**	**units**	**LoLimit**	**HiLimit**	**ValueType**	**Visibility**
895	centroid	AOI to guide by, (Default Type: CALCULATED, Value:)	CAE_INVALID	NUMBER	STRING	N/A			POSITION	PUBLIC
896	limb1	AOI to guide by (marking limb), (Default Type: CALCULATED, Value:)	CAE_IOC	NUMBER	STRING	N/A			POSITION	PUBLIC
897	limb2	AOI to guide by (marking limb), (Default Type: CALCULATED, Value:)	CAE_IOC	NUMBER	STRING	N/A			POSITION	PUBLIC
898	rof1	AOI to guide by (for ROF calculations), (Default Type: CALCULATED, Value:)	CAE_INVALID	NUMBER	STRING	N/A			POSITION	PUBLIC
899	rof2	AOI to guide by (for ROF calculations), (Default Type: CALCULATED, Value:)	CAE_INVALID	NUMBER	STRING	N/A			POSITION	PUBLIC
900	track_mode	Enable tracking?, (Default Type: CALCULATED, Value:) , [ENUM: (0: none) (0: off) (1: centroid) (3: rof) (4: limb) (7: on)]	CAE_INVALID	ENUM	STRING	N/A			NONE	PUBLIC
901	inertial	Track inertially (or not)?, (Default Type: CALCULATED, Value:) , [ENUM: (1: yes) (0: no)]	CAE_INVALID	ENUM	BOOL4	N/A			NONE	PUBLIC
902	**Command**	**Description**	**NeedDate**	**Visibility**						
903	ta_pos.pattern	Complicated movement through points	CAE_SHORT_SCIENCE_B	PUBLIC						
904	**Argument**	**Arg_Description**	**NeedDate**	**Form**	**Representation**	**units**	**LoLimit**	**HiLimit**	**ValueType**	**Visibility**
905	reference	Record the specified Position as a reference	CAE_FOC	NUMBER	STRING	N/A			POSITION	PUBLIC
906	positions	Array of 2+ named Positions to scan	CAE_FOC	NUMBER	STRING	N/A			POSITION	PUBLIC
907	coord_sys	Coordinate system for coordinate axes, (Default Type: SETTABLE, Value: ta_pos.pattern.coord_sys) , [ENUM: (0: IRF) (1: TARF) (2: TAICRF) (3: ERF) (4: WFIRF) (5: FFIRF) (6: FPIRF) (7: SIRF)]	CAE_INVALID	ENUM	STRING	N/A			NONE	PUBLIC
908	points	Array of 2+ positions (coordinate pairs) to scan	CAE_INVALID	NUMBER	VECTOR16	N/A			NONE	PUBLIC
909	pos	Base position for the array of offsets, (Default Type: CALCULATED, Value:)	CAE_FOC	NUMBER	STRING	N/A			POSITION	PUBLIC
910	offsets	Array of 2+ named Offsets to scan	CAE_FOC	NUMBER	STRING	N/A			OFFSET	PUBLIC
911	deltas	Array of 2+ offsets (coordinate pairs) to scan	CAE_FOC	NUMBER	VECTOR16	appropriate angular units			SET_NO_CONVERT	PUBLIC
912	rate	Speed at which the points will be scanned, (Default Type: SETTABLE, Value: ta_pos.pattern.rate)	CAE_INVALID	NUMBER	FLOAT8	arcseconds per second	0	3609.63411	SET	PUBLIC
913	accuracy	How tightly the scan will pass through the points	CAE_FOC	NUMBER	FLOAT8	arcseconds	0		SET	PUBLIC
914	max_length	Maximum distance between nodes	CAE_FOC	NUMBER	FLOAT8	arcseconds	0		SET	PUBLIC
915	min_points	Minimum # of nodes to insert between points	CAE_FOC	NUMBER	INT4	N/A	0	35	NONE	PUBLIC
916	start_time	Time at which to pass through the first point, (Default Type: CALCULATED, Value:)	CAE_INVALID	NUMBER	SEXA8	hours	0	25	NONE	PUBLIC

	A	B	C	D	E	F	G	H	I	J
917	start_delay	Time until passing through the first point, (Default Type: CALCULATED, Value:)	CAE_INVALID	NUMBER	FLOAT8	seconds	0	3600	SET	PUBLIC
918	type	What kind of scan to do, (Default Type: FIXED, Value: smooth) , [ENUM: (1: step) (2: smooth)]	CAE_INVALID	ENUM	STRING	N/A			NONE	PUBLIC
919	mode	Use absolute or relative positioning, (Default Type: SETTABLE, Value: ta_pos.pattern.mode) , [ENUM: (1: absolute) (2: relative)]	CAE_FOC	ENUM	STRING	N/A			NONE	PUBLIC
920	extra_points	Number of user requested extra ramp points, (Default Type: FIXED, Value: 2)	CAE_INVALID	NUMBER	INT4	N/A	0	17	NONE	PUBLIC
921	return	Run the scan in reverse, automatically, (Default Type: FIXED, Value: false) , [ENUM: (0: true) (1: false)]	CAE_FOC	ENUM	BOOL4	N/A			NONE	PUBLIC
922	repeat	Number of times to redo the scan, (Default Type: FIXED, Value: 1)	CAE_FOC	NUMBER	INT4	N/A	1		NONE	PUBLIC
923	chop	Select the chop position in which to scan	CAE_INVALID	NUMBER	STRING	N/A			NONE	PUBLIC
924	use_pattern	Use a previously created and saved pattern	CAE_FOC	NUMBER	STRING	N/A			NONE	PUBLIC
925	save_pattern	Save a pattern to use again later	CAE_FOC	NUMBER	STRING	N/A			NONE	PUBLIC
926	**Command**	**Description**	**NeedDate**	**Visibility**						
927	ta_pos.stow	Locally stabilize the telescope and center	CAE_EARLY_SCIENCE	PUBLIC						
928	**Argument**	**Arg_Description**	**NeedDate**	**Form**	**Representation**	**units**	**LoLimit**	**HiLimit**	**ValueType**	**Visibility**
929	coarse	Desired coarse elevation position, (Default Type: SETTABLE, Value: ta_pos.stow.coarse)	CAE_INVALID	NUMBER	FLOAT8	degrees	15	70	SET	PUBLIC
930	fine	Desired fine elevation position, (Default Type: FIXED, Value: 0.0)	CAE_INVALID	NUMBER	FLOAT8	degrees	-3	3	SET	PUBLIC
931	xel	Desired cross-elevation position, (Default Type: FIXED, Value: 0.0)	CAE_INVALID	NUMBER	FLOAT8	degrees	-3	3	SET	PUBLIC
932	los	Desired Line of Sight (LOS) position, (Default Type: FIXED, Value: 0.0)	CAE_INVALID	NUMBER	FLOAT8	degrees	-3	3	SET	PUBLIC
933	delta_coarse	Desired offset in coarse elevation, (Default Type: FIXED, Value: 0.0)	CAE_INVALID	NUMBER	FLOAT8	degrees	-55	55	SET	PUBLIC
934	delta_fine	Desired offset in fine elevation, (Default Type: FIXED, Value: 0.0)	CAE_INVALID	NUMBER	FLOAT8	degrees	-3	3	SET	PUBLIC
935	delta_xel	Desired offset in cross-elevation, (Default Type: FIXED, Value: 0.0)	CAE_INVALID	NUMBER	FLOAT8	degrees	-3	3	SET	PUBLIC
936	delta_los	Desired offset in Line of Sight (LOS), (Default Type: FIXED, Value: 0.0)	CAE_INVALID	NUMBER	FLOAT8	degrees	-3	3	SET	PUBLIC
937	**Command**	**Description**	**NeedDate**	**Visibility**	**CmdVers**	**DestID**	**CmdID**			
938	ta_pos.set_archive_nsample	Set the archive nsample for a data group	CAE_IOC	PUBLIC	1	0	99999			
939	**Argument**	**Arg_Description**	**NeedDate**	**Form**	**Representation**	**units**	**LoLimit**	**HiLimit**	**ValueType**	**Visibility**
940	datagroup	Data group name, (Precision: N/A) , (Accuracy: N/A) , [ENUM: (1: time_until_rewind)]	CAE_INVALID	ENUM	STRING	none	1	13	NONE	PUBLIC
941	nsample	archive n sample value, (Precision: N/A) , (Accuracy: N/A) , (Default Type: FIXED, Value: 1)	CAE_INVALID	NUMBER	UINT4	none	0	4294967295	NONE	PUBLIC

	A	B	C	D	E	F	G	H	I	J
942	**Command**	**Description**	**NeedDate**	**Visibility**	**CmdVers**	**DestID**	**CmdID**			
943	ta_pos.activate	Manually load an AOI from the MCS into the tracker	CAE_BASIC_SCIENCE	PUBLIC	1	0	99999			
944	**Argument**	**Arg_Description**	**NeedDate**	**Form**	**Representation**	**units**	**LoLimit**	**HiLimit**	**ValueType**	**Visibility**
945	name	AOI name, (Precision: N/A) , (Accuracy: N/A)	CAE_INVALID	ENUM	STRING	N/A			NONE	PUBLIC
946	**Command**	**Description**	**NeedDate**	**Visibility**	**CmdVers**	**DestID**	**CmdID**			
947	ta_pos.deactivate	Manually unload an AOI from the tracker	CAE_BASIC_SCIENCE	PUBLIC	1	0	99999			
948	**Argument**	**Arg_Description**	**NeedDate**	**Form**	**Representation**	**units**	**LoLimit**	**HiLimit**	**ValueType**	**Visibility**
949	name	AOI name, (Precision: N/A) , (Accuracy: N/A)	CAE_INVALID	ENUM	STRING	N/A			NONE	PUBLIC
950	**ta_sma** **List of TA SMA commands**									
951	**Command**	**Description**	**NeedDate**	**Visibility**	**CmdVers**	**DestID**	**CmdID**			
952	ta_sma.scs_power_on_off	Power on/off the TCM/FCM mechanisms and sensors	CAE_INVALID	PUBLIC	1	0	1			
953	**Argument**	**Arg_Description**	**NeedDate**	**Form**	**Representation**	**units**	**LoLimit**	**HiLimit**	**ValueType**	**Visibility**
954	tcm_fcm_des_power	Turns power on or off to the TCM and FCM mechanisms and sensors, (Precision: N/A) , (Accuracy: N/A) , [ENUM: (0: OFF) (1: ON)]	CAE_INVALID	ENUM	UINT1	N/A	0	1	NONE	PUBLIC
955	**Command**	**Description**	**NeedDate**	**Visibility**	**CmdVers**	**DestID**	**CmdID**			
956	ta_sma.scs_built_in_test	Initiates self-tests of the SCS, TCM, and FCM	CAE_INVALID	PUBLIC	1	0	2			
957	**Command**	**Description**	**NeedDate**	**Visibility**	**CmdVers**	**DestID**	**CmdID**			
958	ta_sma.scs_reset_init	Reinitializes or restarts the SCS	CAE_INVALID	PUBLIC	1	0	4			
959	**Command**	**Description**	**NeedDate**	**Visibility**	**CmdVers**	**DestID**	**CmdID**			
960	ta_sma.scs_stop	Stops FCM and TCM actuators in current positions	CAE_INVALID	PUBLIC	1	0	16			
961	**Command**	**Description**	**NeedDate**	**Visibility**	**CmdVers**	**DestID**	**CmdID**			
962	ta_sma.scs_park	Causes the SM, TCM and FCM to lock in a safe state	CAE_INVALID	PUBLIC	1	0	17			
963	**Command**	**Description**	**NeedDate**	**Visibility**	**CmdVers**	**DestID**	**CmdID**			
964	ta_sma.fcm_move	Controls the motion of the FCM	CAE_INVALID	PUBLIC	1	0	18			
965	**Argument**	**Arg_Description**	**NeedDate**	**Form**	**Representation**	**units**	**LoLimit**	**HiLimit**	**ValueType**	**Visibility**
966	fcm_des_rot_r	Desired FCM bias of the mirror 0 point in the R axis, specified in mirror angular displacement phi R, (Precision: 1) , (Accuracy: N/A)	CAE_INVALID	NUMBER	FLOAT4	arcseconds	-1800	1800	SET	PUBLIC
967	fcm_des_rot_s	Desired FCM bias of the mirror 0 point in the S axis, specified in mirror angular displacement phi S, (Precision: 1) , (Accuracy: N/A)	CAE_INVALID	NUMBER	FLOAT4	arcseconds	-1800	1800	SET	PUBLIC
968	fcm_des_t	Desired absolute position of the FCM focus mechanism in the T direction, with 0 at the center of the range of travel, (Precision: 1) , (Accuracy: N/A)	CAE_INVALID	NUMBER	INT4	micrometers	-5000	5000	SET	PUBLIC

	A	B	C	D	E	F	G	H	I	J
969	fcm_des_r	Desired absolute FCM mirror translation in the R direction, with 0 at the center of the range of travel, (Precision: 1) , (Accuracy: N/A)	CAE_INVALID	NUMBER	INT4	micrometers	-5000	5000	SET	PUBLIC
970	fcm_des_s	Desired absolute FCM mirror translation in the S direction, with 0 at the center of the range of travel, (Precision: 1) , (Accuracy: N/A)	CAE_INVALID	NUMBER	INT4	micrometers	-5000	5000	SET	PUBLIC
971	**Command**	**Description**	**NeedDate**	**Visibility**	**CmdVers**	**DestID**	**CmdID**			
972	ta_sma.fcm_actuator	Positions the individual actuators of the FCM	CAE_INVALID	PUBLIC	1	0	19			
973	**Argument**	**Arg_Description**	**NeedDate**	**Form**	**Representation**	**units**	**LoLimit**	**HiLimit**	**ValueType**	**Visibility**
974	fcm_des_actuator_1_position	Desired movement for hexapod actuator 1 as a displacement from its current position, (Precision: 1) , (Accuracy: N/A)	CAE_INVALID	NUMBER	INT4	micrometers	-5000	5000	SET	PUBLIC
975	fcm_des_actuator_2_position	Desired movement for hexapod actuator 2 as a displacement from its current position, (Precision: 1) , (Accuracy: N/A)	CAE_INVALID	NUMBER	INT4	micrometers	-5000	5000	SET	PUBLIC
976	fcm_des_actuator_3_position	Desired movement for hexapod actuator 3 as a displacement from its current position, (Precision: 1) , (Accuracy: N/A)	CAE_INVALID	NUMBER	INT4	micrometers	-5000	5000	SET	PUBLIC
977	fcm_des_actuator_4_position	Desired movement for hexapod actuator 4 as a displacement from its current position, (Precision: 1) , (Accuracy: N/A)	CAE_INVALID	NUMBER	INT4	micrometers	-5000	5000	SET	PUBLIC
978	fcm_des_actuator_5_position	Desired movement for hexapod actuator 5 as a displacement from its current position, (Precision: 1) , (Accuracy: N/A)	CAE_INVALID	NUMBER	INT4	micrometers	-5000	5000	SET	PUBLIC
979	fcm_des_actuator_6_position	Desired movement for hexapod actuator 6 as a displacement from its current position, (Precision: 1) , (Accuracy: N/A)	CAE_INVALID	NUMBER	INT4	micrometers	-5000	5000	SET	PUBLIC
980	**Command**	**Description**	**NeedDate**	**Visibility**	**CmdVers**	**DestID**	**CmdID**			
981	ta_sma.tcm_chop_on_off	Activate/deactivate TCM with current parameters	CAE_INVALID	PUBLIC	1	0	20			
982	**Argument**	**Arg_Description**	**NeedDate**	**Form**	**Representation**	**units**	**LoLimit**	**HiLimit**	**ValueType**	**Visibility**
983	tcm_des_activate	using the TCM mechanism. CHOP_ON starts chopping, CHOP_OFF ends chopping immediately, STOP_MIDPOINT stops at midpoint, STOP_POS_SETPOINT stops at positive tilt setpoint, and STOP_NEG_SETPOINT stops at negative tilt setpoint, (Precision: N/A) , (Accuracy: N/A) , [ENUM: (0: CHOP_OFF) (1: CHOP_ON) (2: STOP_MIDPOINT) (3: STOP_POS_SETPOINT) (4: STOP_NEG_SETPOINT)]	CAE_INVALID	ENUM	UINT1	N/A	0	4	NONE	PUBLIC
984	**Command**	**Description**	**NeedDate**	**Visibility**	**CmdVers**	**DestID**	**CmdID**			
985	ta_sma.tcm_fbc_on_off	Activate/deactivate the FBC function	CAE_INVALID	PUBLIC	1	0	21			
986	**Argument**	**Arg_Description**	**NeedDate**	**Form**	**Representation**	**units**	**LoLimit**	**HiLimit**	**ValueType**	**Visibility**

	A	B	C	D	E	F	G	H	I	J
987	fbc_des_activate	Activate/deactivate the FBC function (enable/disable FBC signal input, when enabled add FBC signal to TCM position control signal), (Precision: N/A) , (Accuracy: N/A) , [ENUM: (0: OFF) (1: ON)]	CAE_INVALID	ENUM	UINT1	N/A	0	1	NONE	PUBLIC
988	**Command**	**Description**	**NeedDate**	**Visibility**	**CmdVers**	**DestID**	**CmdID**			
989	ta_sma.tcm_chopper	Sets TCM chop parameters	CAE_INVALID	PUBLIC	1	0	22			
990	**Argument**	**Arg_Description**	**NeedDate**	**Form**	**Representation**	**units**	**LoLimit**	**HiLimit**	**ValueType**	**Visibility**
991	tcm_des_frequency	Desired TCM chop frequency, (Precision: 0.5) , (Accuracy: N/A)	CAE_INVALID	NUMBER	FLOAT4	hertz	0	20	SET	PUBLIC
992	tcm_des_settling_time	Defines the minimum demanded time interval during which the mirror should achieve position stability at either setpoint, (Precision: 0.1) , (Accuracy: N/A)	CAE_INVALID	NUMBER	FLOAT4	milliseconds	0	100	SET	PUBLIC
993	tcm_des_amplitude_1	Desired chop amplitude as the angle between the chop mid and positive set-points, specified as mirror angular displacements about the chop axis. For two point chopping, this value is also used as the angular displacement for the upper set-point., (Precision: 0.5) , (Accuracy: 10% of set amplitude)	CAE_INVALID	NUMBER	FLOAT4	arcseconds	-1125	1125	SET	PUBLIC
994	tcm_des_amplitude_2	Desired chop amplitude as the angle between the chop mid and negative set-points, specified as mirror angular displacements about the chop axis. For two axis chopping, this parameter is ignored., (Precision: 0.5) , (Accuracy: 10% of set amplitude)	CAE_INVALID	NUMBER	FLOAT4	arcseconds	-1125	1125	SET	PUBLIC
995	tcm_des_profile	Selects whether a 2 or 3 point chopping profile is used, (Precision: N/A) , (Accuracy: N/A) , [ENUM: (0: TWO_POINT) (1: THREE_POINT)]	CAE_INVALID	ENUM	UINT1	N/A	0	1	NONE	PUBLIC
996	tcm_des_tip	Desired displacement of the chop throw zero point from the boresight position in the R' axis (Elevation), specified as mirror angular displacement phi R. For 3-point chopping this is the position of the mid-setpoint., (Precision: 0.5) , (Accuracy: N/A)	CAE_INVALID	NUMBER	FLOAT4	arcseconds	-1125	1125	SET	PUBLIC
997	tcm_des_tilt	Desired displacement of the chop throw zero point from the boresight position in the S' axis (Cross-Elevation), specified as mirror angular displacement phi S. For 3-point chopping this is the position of the mid-setpoint., (Precision: 0.5) , (Accuracy: N/A)	CAE_INVALID	NUMBER	FLOAT4	arcseconds	-1125	1125	SET	PUBLIC
998	tcm_des_angle	Desired angle between the chop axis and the positive R' axis in the R', S' plane, (Precision: 0.2) , (Accuracy: N/A)	CAE_INVALID	NUMBER	FLOAT4	degrees	0	360	SET	PUBLIC

	A	B	C	D	E	F	G	H	I	J
999	tcm_des_phase	Time delay between the synch signal and the start of the setpoint which has the positive tilt increment with respect to the commanded offset, (Precision: 1) , (Accuracy: N/A)	CAE_INVALID	NUMBER	UINT2	milliseconds	0	1000	SET	PUBLIC
1000	**Command**	**Description**	**NeedDate**	**Visibility**	**CmdVers**	**DestID**	**CmdID**			
1001	ta_sma.tcm_chop_sync_source	Selects use of internal or external TTL chop sync	CAE_INVALID	PUBLIC	1	0	23			
1002	**Argument**	**Arg_Description**	**NeedDate**	**Form**	**Representation**	**units**	**LoLimit**	**HiLimit**	**ValueType**	**Visibility**
1003	tcm_des_sync_source	Selects the use of either the internal chop synch signal or an external TTL chop synch signal, (Precision: N/A) , (Accuracy: N/A) , [ENUM: (0: INTERNAL) (1: EXTERNAL)]	CAE_INVALID	ENUM	UINT1	N/A	0	1	NONE	PUBLIC
1004	**Command**	**Description**	**NeedDate**	**Visibility**	**CmdVers**	**DestID**	**CmdID**			
1005	ta_sma.tcm_chop_wf_select	Selects use of internal or external chop waveform	CAE_INVALID	PUBLIC	1	0	24			
1006	**Argument**	**Arg_Description**	**NeedDate**	**Form**	**Representation**	**units**	**LoLimit**	**HiLimit**	**ValueType**	**Visibility**
1007	tcm_des_wf_source	Selects the chop waveform source. Internal uses just the current TCM_CHOPPER configuration; External uses just the external waveform., (Precision: N/A) , (Accuracy: N/A) , [ENUM: (0: INTERNAL) (1: EXTERNAL)]	CAE_INVALID	ENUM	UINT1	N/A	0	1	NONE	PUBLIC
1008	**Command**	**Description**	**NeedDate**	**Visibility**	**CmdVers**	**DestID**	**CmdID**			
1009	ta_sma.scs_set_temperature_trigger	Sets the temperature alarm notification for each actuator	CAE_INVALID	PUBLIC	1	0	27			
1010	**Argument**	**Arg_Description**	**NeedDate**	**Form**	**Representation**	**units**	**LoLimit**	**HiLimit**	**ValueType**	**Visibility**
1011	sensor_1_temp_des_trigger	Temperature alarm trigger for sensor 1, (Precision: 0.5) , (Accuracy: 0.5)	CAE_INVALID	NUMBER	FLOAT4	degrees Celsius	-55	125	SET	PUBLIC
1012	sensor_2_temp_des_trigger	Temperature alarm trigger for sensor 2, (Precision: 0.5) , (Accuracy: 0.5)	CAE_INVALID	NUMBER	FLOAT4	degrees Celsius	-55	125	SET	PUBLIC
1013	sensor_3_temp_des_trigger	Temperature alarm trigger for sensor 3, (Precision: 0.5) , (Accuracy: 0.5)	CAE_INVALID	NUMBER	FLOAT4	degrees Celsius	-55	125	SET	PUBLIC
1014	sensor_4_temp_des_trigger	Temperature alarm trigger for sensor 4, (Precision: 0.5) , (Accuracy: 0.5)	CAE_INVALID	NUMBER	FLOAT4	degrees Celsius	-55	125	SET	PUBLIC
1015	sensor_5_temp_des_trigger	Temperature alarm trigger for sensor 5, (Precision: 0.5) , (Accuracy: 0.5)	CAE_INVALID	NUMBER	FLOAT4	degrees Celsius	-55	125	SET	PUBLIC
1016	sensor_6_temp_des_trigger	Temperature alarm trigger for sensor 6, (Precision: 0.5) , (Accuracy: 0.5)	CAE_INVALID	NUMBER	FLOAT4	degrees Celsius	-55	125	SET	PUBLIC
1017	sensor_7_temp_des_trigger	Temperature alarm trigger for sensor 7, (Precision: 0.5) , (Accuracy: 0.5)	CAE_INVALID	NUMBER	FLOAT4	degrees Celsius	-55	125	SET	PUBLIC
1018	sensor_8_temp_des_trigger	Temperature alarm trigger for sensor 8, (Precision: 0.5) , (Accuracy: 0.5)	CAE_INVALID	NUMBER	FLOAT4	degrees Celsius	-55	125	SET	PUBLIC
1019	sensor_9_temp_des_trigger	Temperature alarm trigger for sensor 9, (Precision: 0.5) , (Accuracy: 0.5)	CAE_INVALID	NUMBER	FLOAT4	degrees Celsius	-55	125	SET	PUBLIC
1020	sensor_10_temp_des_trigger	Temperature alarm trigger for sensor 10, (Precision: 0.5) , (Accuracy: 0.5)	CAE_INVALID	NUMBER	FLOAT4	degrees Celsius	-55	125	SET	PUBLIC
1021	**Command**	**Description**	**NeedDate**	**Visibility**	**CmdVers**	**DestID**	**CmdID**			

	A	B	C	D	E	F	G	H	I	J
1022	ta_sma.scs_state_request	Returns the SCS_COMPOSITE_STATUS message	CAE_INVALID	PUBLIC	1	0	258			
1023	**Command**	**Description**	**NeedDate**	**Visibility**	**CmdVers**	**DestID**	**CmdID**			
1024	ta_sma.scs_health_request	Returns the SCS_HEALTH_STATUS message	CAE_INVALID	PUBLIC	1	0	257			
1025	**Command**	**Description**	**NeedDate**	**Visibility**	**CmdVers**	**DestID**	**CmdID**			
1026	ta_sma.scs_status_subscribe	Subscribes to SCS status/information records	CAE_INVALID	PUBLIC	1	0	32			
1027	**Argument**	**Arg_Description**	**NeedDate**	**Form**	**Representation**	**units**	**LoLimit**	**HiLimit**	**ValueType**	**Visibility**
1028	scs_des_status	(Precision: N/A) , (Accuracy: N/A) , [ENUM: (1: DES_SCS_HEALTH_STATUS) (2: DES_SCS_COMPOSITE_STATUS) (4: DES_FCM_ACTUATOR_POSITION_STATUS) (8: DES_FCM_POSITION_STATUS) (16: DES_TCM_CHOPPER_STATUS) (32: DES_SCS_TEMPERATURE_STATUS) (64: DES_SCS_ACTUATOR_CURRENT_STATUS)]	CAE_INVALID	ENUM	UINT1	N/A	0	127	NONE	PUBLIC
1029	**Command**	**Description**	**NeedDate**	**Visibility**	**CmdVers**	**DestID**	**CmdID**			
1030	ta_sma.scs_status_unsubscribe	Unsubscribes to SCS status/information records	CAE_INVALID	PUBLIC	1	0	33			
1031	**Argument**	**Arg_Description**	**NeedDate**	**Form**	**Representation**	**units**	**LoLimit**	**HiLimit**	**ValueType**	**Visibility**
1032	scs_des_status	(Precision: N/A) , (Accuracy: N/A) , [ENUM: (1: DES_SCS_HEALTH_STATUS) (2: DES_SCS_COMPOSITE_STATUS) (4: DES_FCM_ACTUATOR_POSITION_STATUS) (8: DES_FCM_POSITION_STATUS) (16: DES_TCM_CHOPPER_STATUS) (32: DES_SCS_TEMPERATURE_STATUS) (64: DES_SCS_ACTUATOR_CURRENT_STATUS)]	CAE_INVALID	ENUM	UINT1	N/A	0	127	NONE	PUBLIC
1033	**Command**	**Description**	**NeedDate**	**Visibility**	**CmdVers**	**DestID**	**CmdID**			
1034	ta_sma.maint_set_trace	Instructs SCCS to dump engineering data on serial lines. This command is intended for engineering use only	CAE_INVALID	PRIVATE	1	0	13570			
1035	**Argument**	**Arg_Description**	**NeedDate**	**Form**	**Representation**	**units**	**LoLimit**	**HiLimit**	**ValueType**	**Visibility**
1036	scs_trace_level	Level of SCS trace, (Precision: N/A) , (Accuracy: N/A) , [ENUM: (0: LVL0) (1: LVL1) (2: LVL2) (3: LVL3) (4: LVL4) (5: LVL5) (6: LVL6) (7: LVL7) (8: LVL8) (9: LVL9) (10: LVL10)]	CAE_INVALID	ENUM	UINT4	N/A	0	10	NONE	PRIVATE
1037	tcs_trace_level	Level of TCS trace, (Precision: N/A) , (Accuracy: N/A) , [ENUM: (0: ANALOG_DISPLAY) (1: S_CTRL_DISPLAY) (2: R_CTRL_DISPLAY)]	CAE_INVALID	ENUM	UINT4	N/A	0	2	NONE	PRIVATE
1038	**Command**	**Description**	**NeedDate**	**Visibility**	**CmdVers**	**DestID**	**CmdID**			
1039	ta_sma.maint_send_pmac_cmd	Sends the PMAC_CMD_STRING. This command is intended for engineering use only	CAE_INVALID	PRIVATE	1	0	13572			

	A	B	C	D	E	F	G	H	I	J
1040	pmac_cmd_string	Command to the PMAC, (Precision: N/A) , (Accuracy: N/A)	CAE_INVALID	NUMBER	STRING	N/A			NONE	PRIVATE
1041	**Command**	**Description**	**NeedDate**	**Visibility**	**CmdVers**	**DestID**	**CmdID**			
1042	ta_sma.send_packet	Used to send pass through data packets to the TA	CAE_INVALID	PUBLIC	1	0	0			
1043	**Argument**	**Arg_Description**	**NeedDate**	**Form**	**Representation**	**units**	**LoLimit**	**HiLimit**	**ValueType**	**Visibility**
1044	packet	The data packet to send encoded as an ASCII hexadecimal string	CAE_INVALID	NUMBER	STRING	N/A			NONE	PUBLIC
1045	**Command**	**Description**	**NeedDate**	**Visibility**	**CmdVers**	**DestID**	**CmdID**			
1046	ta_sma.set_archive_nsample	Set the archive nsample for a data group	CAE_INVALID	PUBLIC	1	0	1			
1047	**Argument**	**Arg_Description**	**NeedDate**	**Form**	**Representation**	**units**	**LoLimit**	**HiLimit**	**ValueType**	**Visibility**
1048	datagroup	Data group name, (Precision: N/A) , (Accuracy: N/A) , [ENUM: (1: scs_health_status) (2: scs_composite_status) (3: fcm_actuator_position_status) (4: tcm_chopper_status) (5: scs_temperature_status) (6: scs_actuator_current_status) (7: fcm_position_status)]	CAE_INVALID	ENUM	STRING	none	1	7	NONE	PUBLIC
1049	nsample	archive n sample value, (Precision: N/A) , (Accuracy: N/A) , (Default Type: FIXED, Value: 1)	CAE_INVALID	NUMBER	UINT4	none	0	4294967295	NONE	PUBLIC
1050	**ta_state** **List of TA state commands**									
1051	**Command**	**Description**	**NeedDate**	**Visibility**						
1052	ta_state.resume	Enables the application	CAE_FOC	PUBLIC						
1053	**Command**	**Description**	**NeedDate**	**Visibility**						
1054	ta_state.suspend	Suspends the application	CAE_FOC	PUBLIC						
1055	**Command**	**Description**	**NeedDate**	**Visibility**						
1056	ta_state.set	Set the value for a mode or parameter	CAE_ENG_BUILD_3	PUBLIC						
1057	**Argument**	**Arg_Description**	**NeedDate**	**Form**	**Representation**	**units**	**LoLimit**	**HiLimit**	**ValueType**	**Visibility**
1058	ANY	The keyword of this argument is the name of the item or array to set; the value supplied in this argument is the new value for the item or specified array element.	CAE_INVALID	NUMBER	STRING	N/A			INDEXED	PUBLIC
1059	**Command**	**Description**	**NeedDate**	**Visibility**						
1060	ta_state.verbose	Enables debugging output	CAE_IMMEDIATE	PUBLIC						
1061	**Command**	**Description**	**NeedDate**	**Visibility**						
1062	ta_state.quiet	Suspends debugging output	CAE_FOC	PUBLIC						
1063	**Command**	**Description**	**NeedDate**	**Visibility**						
1064	ta_state.startup	Start up the telescope at beginning of the night	CAE_EARLY_SCIENCE	PUBLIC						
1065	**Command**	**Description**	**NeedDate**	**Visibility**						
1066	ta_state.camera	Privileged command to set up WFI, FFI, or FPI	CAE_EARLY_SCIENCE	PUBLIC						

	A	B	C	D	E	F	G	H	I	J
1067	**Argument**	**Arg_Description**	**NeedDate**	**Form**	**Representation**	**units**	**LoLimit**	**HiLimit**	**ValueType**	**Visibility**
1068	camera	Name of the camera to be initialized, [ENUM: (1: wfi) (2: ffi) (4: fpi)]	CAE_INVALID	ENUM	STRING	N/A	1	4	NONE	PUBLIC
1069	integration	Integration time for each camera image, (Precision: 0.001) , (Accuracy: 0.001) , (Default Type: CALCULATED_REQUIRED_ONCE, Value: ta_state.camera.*.integration)	CAE_INVALID	NUMBER	FLOAT8	seconds	0.01	10	SET	PUBLIC
1070	binning	Binning factor for camera CCD array, (Default Type: CALCULATED, Value: ta_state.camera.*.binning) , [ENUM: (1: 1x1) (1: 1) (2: 2x2) (2: 2) (4: 4x4) (4: 4)]	CAE_INVALID	ENUM	STRING	unity	1	4	NONE	PUBLIC
1071	adcu	Number of bits in the output data, (Default Type: CALCULATED, Value: ta_state.camera.*.adcu) , [ENUM: (8: 8) (14: 14)]	CAE_INVALID	ENUM	STRING	N/A	8	14	NONE	PUBLIC
1072	**Command**	**Description**	**NeedDate**	**Visibility**						
1073	ta_state.servo	Privileged command to uncage the telescope.	CAE_EARLY_SCIENCE	PUBLIC						
1074	**Argument**	**Arg_Description**	**NeedDate**	**Form**	**Representation**	**units**	**LoLimit**	**HiLimit**	**ValueType**	**Visibility**
1075	stay	Stay in local mode, [ENUM: (1: local)]	CAE_INVALID	ENUM	STRING	N/A			NONE	PUBLIC
1076	compensation	Flexible Body Compensation to use, [ENUM: (1: none) (2: quasi_static) (3: dynamic) (4: both)]	CAE_INVALID	ENUM	STRING	N/A			NONE	PUBLIC
1077	**Command**	**Description**	**NeedDate**	**Visibility**						
1078	ta_state.standby	Go to standby mode from caged, local, or inertial	CAE_EARLY_SCIENCE	PUBLIC						
1079	**Command**	**Description**	**NeedDate**	**Visibility**						
1080	ta_state.cage	Cage the telescope	CAE_EARLY_SCIENCE	PUBLIC						
1081	**Command**	**Description**	**NeedDate**	**Visibility**						
1082	ta_state.iqc	Update the Image Quality Compensation	CAE_EARLY_SCIENCE	PUBLIC						
1083	**Argument**	**Arg_Description**	**NeedDate**	**Form**	**Representation**	**units**	**LoLimit**	**HiLimit**	**ValueType**	**Visibility**
1084	init	Initialize the Image Quality Compensation?, (Default Type: FIXED, Value: no) , [ENUM: (0: no) (1: yes)]	CAE_INVALID	ENUM	BOOL4	N/A			NONE	PUBLIC
1085	limit	Maximum offset along the elevation axis, (Default Type: SETTABLE, Value: ta_state.iqc.limit)	CAE_INVALID	NUMBER	SEXA8	degrees	0	55	SET	PUBLIC
1086	monitor	Monitor elevation for IQC updates?, (Default Type: SETTABLE, Value: ta_state.iqc.monitor) , [ENUM: (0: no) (1: yes)]	CAE_INVALID	ENUM	BOOL4	N/A			NONE	PUBLIC
1087	go	Update the Image Quality Compensation?, (Default Type: FIXED, Value: no) , [ENUM: (0: no) (1: yes)]	CAE_INVALID	ENUM	BOOL4	N/A			NONE	PUBLIC
1088	**Command**	**Description**	**NeedDate**	**Visibility**						
1089	ta_state.shutdown	Shut down the telescope at end of flight	CAE_EARLY_SCIENCE	PUBLIC						
1090	**Command**	**Description**	**NeedDate**	**Visibility**	**CmdVers**	**DestID**	**CmdID**			

	A	B	C	D	E	F	G	H	I	J
1091	ta_state.set_archive_nsample	Set the archive nsample for a data group	CAE_IOC	PUBLIC	1	0	99999			
1092	**Argument**	**Arg_Description**	**NeedDate**	**Form**	**Representation**	**units**	**LoLimit**	**HiLimit**	**ValueType**	**Visibility**
1093	datagroup	Data group name, (Precision: N/A) , (Accuracy: N/A) , [ENUM: (1: fd_deg_el) (2: fd_deg_el_lim_time) (3: fd_deg_xel) (4: fd_deg_xel_lim) (5: fd_deg_xel_lim_time) (6: fd_deg_los) (7: fd_deg_los_lim) (8: fd_deg_los_lim_time) (9: coarse_deg_el) (10: ta_deg_el) (11: ta_deg_xel) (12: ta_deg_los) (13: irf_deg_el) (14: irf_deg_xel) (15: irf_deg_los) (16: ta_shr_ra) (17: ta_deg_dec) (18: ta_deg_vpa) (19: ra) (20: dec) (21: vpa) (22: rof)]	CAE_INVALID	ENUM	STRING	none	1	22	NONE	PUBLIC
1094	nsample	archive n sample value, (Precision: N/A) , (Accuracy: N/A) , (Default Type: FIXED, Value: 1)	CAE_INVALID	NUMBER	UINT4	none	0	4294967295	NONE	PUBLIC
1095	**ta_trc** **List of TA Tracker Controller (TRC) commands**									
1096	**Command**	**Description**	**NeedDate**	**Visibility**	**CmdVers**	**DestID**	**CmdID**			
1097	ta_trc.trc_mode_positioning	Transition to the POSITIONING mode	CAE_INVALID	PUBLIC	1	0	1			
1098	**Command**	**Description**	**NeedDate**	**Visibility**	**CmdVers**	**DestID**	**CmdID**			
1099	ta_trc.trc_mode_tracking_centroid_on_axis	To initiate centroid, on-axis tracking	CAE_INVALID	PUBLIC	1	0	2			
1100	**Argument**	**Arg_Description**	**NeedDate**	**Form**	**Representation**	**units**	**LoLimit**	**HiLimit**	**ValueType**	**Visibility**
1101	trc_des_inertial_enable	Specifies how the TRC interprets centroid motion- if set to YES, centroid motion during tracking is interpreted as gyro- drift, otherwise centroid motion is interpreted as object motion, (Precision: N/A) , (Accuracy: N/A) , [ENUM: (0: NO) (1: YES)]	CAE_INVALID	ENUM	UINT4	N/A	0	1	NONE	PUBLIC
1102	trc_des_boresight_enable	Defines the TARF position to place the object of interest (the Tracking Position) during tracking. If set to YES, the boresight is the desired position, otherwise the initial location of the tracking AOI centroid is the desired position, (Precision: N/A) , (Accuracy: N/A) , [ENUM: (0: NO) (1: YES)]	CAE_INVALID	ENUM	UINT4	N/A	0	1	NONE	PUBLIC
1103	trc_des_aoi_trc	Specifies the AOI to be used by the tracker for determining elevation and cross-elevation position errors, (Precision: N/A) , (Accuracy: N/A)	CAE_INVALID	NUMBER	UINT4	N/A	1	8	NONE	PUBLIC
1104	**Command**	**Description**	**NeedDate**	**Visibility**	**CmdVers**	**DestID**	**CmdID**			

	A	B	C	D	E	F	G	H	I	J
1105	ta_trc.trc_mode_tracking_centroid_offset	To initiate centroid, offset tracking	CAE_INVALID	PUBLIC	1	0	3			
1106	**Argument**	**Arg_Description**	**NeedDate**	**Form**	**Representation**	**units**	**LoLimit**	**HiLimit**	**ValueType**	**Visibility**
1107	trc_des_inertial_enable	Specifies how the TRC interprets centroid motion- if set to YES, centroid motion during tracking is interpreted as gyro- drift, otherwise centroid motion is interpreted as object motion, (Precision: N/A) , (Accuracy: N/A) , [ENUM: (0: NO) (1: YES)]	CAE_INVALID	ENUM	UINT4	N/A	0	1	NONE	PUBLIC
1108	trc_des_boresight_enable	Defines the TARF position to place the object of interest (the Tracking Position) during tracking. If set to YES, the boresight is the desired position, otherwise the initial location of the tracking AOI centroid is the desired position, (Precision: N/A) , (Accuracy: N/A) , [ENUM: (0: NO) (1: YES)]	CAE_INVALID	ENUM	UINT4	N/A	0	1	NONE	PUBLIC
1109	trc_des_aoi_trc	Specifies the AOI to be used by the tracker for determining elevation and cross-elevation position errors, (Precision: N/A) , (Accuracy: N/A)	CAE_INVALID	NUMBER	UINT4	N/A	1	8	NONE	PUBLIC
1110	trc_des_rel_irf_quat	Quaternion component, (Precision: TBD) , (Accuracy: TBD) , [Matrix size: (min: 1), (max: 1)] The rotational offset between the centroid of the object in the selected AOI, and the object of interest (also used to calculate the Tracking Position from the AOI position if BORESIGHT_ENABLE is OFF), [Quat_elem: (min: 4), (max: 4)]	CAE_INVALID	NUMBER	FLOAT8	N/A	-1	1	NONE	PUBLIC
1111	**Command**	**Description**	**NeedDate**	**Visibility**	**CmdVers**	**DestID**	**CmdID**			
1112	ta_trc.trc_mode_tracking_limb	Allows tracking of the edges of large objects	CAE_INVALID	PUBLIC	1	0	4			
1113	**Argument**	**Arg_Description**	**NeedDate**	**Form**	**Representation**	**units**	**LoLimit**	**HiLimit**	**ValueType**	**Visibility**
1114	trc_des_aoi_limb_1	Specifies the first of two AOIs to be used by the tracker during limb tracking, (Precision: N/A) , (Accuracy: N/A)	CAE_INVALID	NUMBER	INT4	N/A	1	8	NONE	PUBLIC
1115	trc_des_aoi_limb_2	Specifies the second of the two AOIs to be used by the tracker during limb tracking, (Precision: N/A) , (Accuracy: N/A)	CAE_INVALID	NUMBER	INT4	N/A	1	8	NONE	PUBLIC
1116	**Command**	**Description**	**NeedDate**	**Visibility**	**CmdVers**	**DestID**	**CmdID**			
1117	ta_trc.trc_rof_calculate	To enable or disable TASCU gyroscope drift feedback in the LOS axis	CAE_INVALID	PUBLIC	1	0	6			
1118	**Argument**	**Arg_Description**	**NeedDate**	**Form**	**Representation**	**units**	**LoLimit**	**HiLimit**	**ValueType**	**Visibility**
1119	trc_des_rof_status	Specifies whether or not the TRC is to compute error data sets to estimate gyro drift in the LOS axis, (Precision: N/A) , (Accuracy: N/A) , [ENUM: (0: NO) (1: YES)]	CAE_INVALID	ENUM	UINT4	N/A	0	1	NONE	PUBLIC

	A	B	C	D	E	F	G	H	I	J
1120	trc_des_aoi_rof_1	Specifies the first of two AOIs to be used by the tracker for rotation measurement, (Precision: N/A) , (Accuracy: N/A)	CAE_INVALID	NUMBER	INT4	N/A	1	8	NONE	PUBLIC
1121	trc_des_aoi_rof_2	Specifies the second of two AOIs to be used by the tracker for rotation measurement, (Precision: N/A) , (Accuracy: N/A)	CAE_INVALID	NUMBER	INT4	N/A	1	8	NONE	PUBLIC
1122	**Command**	**Description**	**NeedDate**	**Visibility**	**CmdVers**	**DestID**	**CmdID**			
1123	ta_trc.trc_mode_override	Puts the Tracker into an override mode, in which the MCS can send certain override commands through the Tracker to the TASCU	CAE_INVALID	PUBLIC	1	0	5			
1124	**Command**	**Description**	**NeedDate**	**Visibility**	**CmdVers**	**DestID**	**CmdID**			
1125	ta_trc.trc_aoi_define	To create an AOI with the specified AOI ID in the specified camera at the specified location within the camera image	CAE_INVALID	PUBLIC	1	0	7			
1126	**Argument**	**Arg_Description**	**NeedDate**	**Form**	**Representation**	**units**	**LoLimit**	**HiLimit**	**ValueType**	**Visibility**
1127	trc_des_aoi_id	Unique number used to designate a specific AOI, (Precision: N/A) , (Accuracy: N/A)	CAE_INVALID	NUMBER	INT4	N/A	1	8	NONE	PUBLIC
1128	trc_des_camera_id	Designates one of the three imagers, (Precision: N/A) , (Accuracy: N/A) , [ENUM: (0: WFI) (1: FFI) (2: FPI)]	CAE_INVALID	ENUM	UINT4	N/A	0	2	NONE	PUBLIC
1129	trc_des_aoi_calculation	Specifies the kind of calculation performed on AOIs, (Precision: N/A) , (Accuracy: N/A) , [ENUM: (0: OFF) (1: CENTROIDING) (2: LIMB)]	CAE_INVALID	ENUM	UINT4	N/A	0	2	NONE	PUBLIC
1130	trc_des_aoi_row_start	Starting (top) row of the defined AOI, (Precision: 1) , (Accuracy: N/A)	CAE_INVALID	NUMBER	INT4	pixels	0	1023	SET	PUBLIC
1131	trc_des_aoi_column_start	Starting (left) column of the desired AOI, (Precision: 1) , (Accuracy: N/A)	CAE_INVALID	NUMBER	INT4	pixels	0	1023	SET	PUBLIC
1132	trc_des_aoi_row_size	Defines the number of pixel rows in the AOI (counting down from the starting row), (Precision: 1) , (Accuracy: N/A)	CAE_INVALID	NUMBER	INT4	pixels	3	150	SET	PUBLIC
1133	trc_des_aoi_column_size	Defines the number of pixel columns in the AOI (adding columns to right from the starting column), (Precision: 1) , (Accuracy: N/A)	CAE_INVALID	NUMBER	INT4	pixels	3	150	SET	PUBLIC
1134	**Command**	**Description**	**NeedDate**	**Visibility**	**CmdVers**	**DestID**	**CmdID**			
1135	ta_trc.trc_aoi_clear	To delete an existing AOI	CAE_INVALID	PUBLIC	1	0	8			
1136	**Argument**	**Arg_Description**	**NeedDate**	**Form**	**Representation**	**units**	**LoLimit**	**HiLimit**	**ValueType**	**Visibility**
1137	trc_des_aoi_id	Unique number used to designate a specific AOI, (Precision: N/A) , (Accuracy: N/A)	CAE_INVALID	NUMBER	INT4	N/A	1	8	NONE	PUBLIC
1138	**Command**	**Description**	**NeedDate**	**Visibility**	**CmdVers**	**DestID**	**CmdID**			
1139	ta_trc.trc_aoi_correction	To set the threshold and correction values used in the centroid or limb calculations for the indicated AOI	CAE_INVALID	PUBLIC	1	0	9			
1140	**Argument**	**Arg_Description**	**NeedDate**	**Form**	**Representation**	**units**	**LoLimit**	**HiLimit**	**ValueType**	**Visibility**

	A	B	C	D	E	F	G	H	I	J
1141	trc_des_aoi_id	Unique number used to designate a specific AOI, (Precision: N/A) , (Accuracy: N/A)	CAE_INVALID	NUMBER	INT4	N/A	1	8	NONE	PUBLIC
1142	trc_des_aoi_threshold	Specifies the minimum pixel intensity to be included in the centroid or limb calculation. The value is a normalized factor applied to the dynamic range of the AOI., (Precision: N/A) , (Accuracy: N/A)	CAE_INVALID	NUMBER	FLOAT4	N/A	0	1	NONE	PUBLIC
1143	trc_des_aoi_range_limit	Specifies the pixel range around the brightest pixel in an AOI to be included in the centroid calculation. Range limitation is only used for a centroiding AOI. A value of 0 disables the range limitation., (Precision: N/A) , (Accuracy: N/A)	CAE_INVALID	NUMBER	FLOAT4	pixels	0	100	SET	PUBLIC
1144	trc_des_aoi_correction_dark	Specifies whether to dynamically enable dark field correction of the AOI, (Precision: N/A) , (Accuracy: N/A) , [ENUM: (0: NO) (1: YES)]	CAE_INVALID	ENUM	UINT4	N/A	0	1	NONE	PUBLIC
1145	trc_des_aoi_correction_flat	Specifies whether to enable flat field correction of the AOI, (Precision: N/A) , (Accuracy: N/A) , [ENUM: (0: NO) (1: YES)]	CAE_INVALID	ENUM	UINT4	N/A	0	1	NONE	PUBLIC
1146	trc_des_aoi_correction_distortion	Specifies whether to enable distortion correction of the AOI, (Precision: N/A) , (Accuracy: N/A) , [ENUM: (0: NO) (1: YES)]	CAE_INVALID	ENUM	UINT4	N/A	0	1	NONE	PUBLIC
1147	**Command**	**Description**	**NeedDate**	**Visibility**	**CmdVers**	**DestID**	**CmdID**			
1148	ta_trc.trc_boresight_define_pixel	To define the sub-pixel row and column in the specified imager	CAE_INVALID	PUBLIC	1	0	10			
1149	**Argument**	**Arg_Description**	**NeedDate**	**Form**	**Representation**	**units**	**LoLimit**	**HiLimit**	**ValueType**	**Visibility**
1150	trc_des_camera_id	Designates one of the three imagers, (Precision: N/A) , (Accuracy: N/A) , [ENUM: (0: WFI) (1: FFI) (2: FPI)]	CAE_INVALID	ENUM	UINT4	N/A	0	2	NONE	PUBLIC
1151	trc_des_row	Specifies a specific pixel row location in an imager field, (Precision: 1) , (Accuracy: N/A)	CAE_INVALID	NUMBER	FLOAT4	pixels	0	1023	SET	PUBLIC
1152	trc_des_column	Specifies a specific pixel column location in an imager field, (Precision: 1) , (Accuracy: N/A)	CAE_INVALID	NUMBER	FLOAT4	pixels	0	1023	SET	PUBLIC
1153	**Command**	**Description**	**NeedDate**	**Visibility**	**CmdVers**	**DestID**	**CmdID**			
1154	ta_trc.trc_boresight_define_tarf	To define the boresight directly in TARF coordinates	CAE_INVALID	PUBLIC	1	0	11			
1155	**Argument**	**Arg_Description**	**NeedDate**	**Form**	**Representation**	**units**	**LoLimit**	**HiLimit**	**ValueType**	**Visibility**
1156	trc_des_tarf_u	Specifies the U axis of a TARF position (the complete TARF UVW vector may specify either a displacement from the current position, or an origin around which to rotate), (Precision: TBD) , (Accuracy: TBD)	CAE_INVALID	NUMBER	FLOAT8	N/A	-1	1	NONE	PUBLIC

	A	B	C	D	E	F	G	H	I	J
1157	trc_des_tarf_v	Specifies the v axis of a TARF position (the complete TARF UVW vector may specify either a displacement from the current position, or an origin around which to rotate), (Precision: TBD) , (Accuracy: TBD)	CAE_INVALID	NUMBER	FLOAT8	N/A	-1	1	NONE	PUBLIC
1158	trc_des_tarf_w	Specifies the w axis of a TARF position (the complete TARF UVW vector may specify either a displacement from the current position, or an origin around which to rotate), (Precision: TBD) , (Accuracy: TBD)	CAE_INVALID	NUMBER	FLOAT8	N/A	-1	1	NONE	PUBLIC
1159	**Command**	**Description**	**NeedDate**	**Visibility**	**CmdVers**	**DestID**	**CmdID**			
1160	ta_trc.trc_boresight_clear	To delete the boresight definition from the Tracker	CAE_INVALID	PUBLIC	1	0	12			
1161	**Command**	**Description**	**NeedDate**	**Visibility**	**CmdVers**	**DestID**	**CmdID**			
1162	ta_trc.trc_los_limit_move	To perform LOS rotations about any point within the TARF coordinate system during Positioning Mode	CAE_INVALID	PUBLIC	1	0	13			
1163	**Argument**	**Arg_Description**	**NeedDate**	**Form**	**Representation**	**units**	**LoLimit**	**HiLimit**	**ValueType**	**Visibility**
1164	trc_des_tarf_u	Specifies the u axis of a TARF position (the complete TARF UVW vector may specify either a displacement from the current position, or an origin around which to rotate), (Precision: TBD) , (Accuracy: TBD)	CAE_INVALID	NUMBER	FLOAT8	N/A	-1	1	NONE	PUBLIC
1165	trc_des_tarf_v	Specifies the v axis of a TARF position (the complete TARF UVW vector may specify either a displacement from the current position, or an origin around which to rotate), (Precision: TBD) , (Accuracy: TBD)	CAE_INVALID	NUMBER	FLOAT8	N/A	-1	1	NONE	PUBLIC
1166	trc_des_tarf_w	Specifies the w axis of a TARF position (the complete TARF UVW vector may specify either a displacement from the current position, or an origin around which to rotate), (Precision: TBD) , (Accuracy: TBD)	CAE_INVALID	NUMBER	FLOAT8	N/A	-1	1	NONE	PUBLIC
1167	trc_des_delta_rof	Commanded change in ROF angle, (Precision: TBD) , (Accuracy: TBD)	CAE_INVALID	NUMBER	FLOAT4	degrees	-6	6	SET	PUBLIC
1168	**Command**	**Description**	**NeedDate**	**Visibility**	**CmdVers**	**DestID**	**CmdID**			
1169	ta_trc.trc_los_limit_set	To perform LOS rotations about any point within the TARF coordinate system during Tracking Mode	CAE_INVALID	PUBLIC	1	0	14			
1170	**Argument**	**Arg_Description**	**NeedDate**	**Form**	**Representation**	**units**	**LoLimit**	**HiLimit**	**ValueType**	**Visibility**
1171	trc_des_tarf_u	Specifies the u axis of a TARF position (the complete TARF UVW vector may specify either a displacement from the current position, or an origin around which to rotate), (Precision: TBD) , (Accuracy: TBD)	CAE_INVALID	NUMBER	FLOAT8	N/A	-1	1	NONE	PUBLIC

	A	B	C	D	E	F	G	H	I	J
1172	trc_des_tarf_v	Specifies the V axis of a TARF position (the complete TARF UVW vector may specify either a displacement from the current position, or an origin around which to rotate), (Precision: TBD) , (Accuracy: TBD)	CAE_INVALID	NUMBER	FLOAT8	N/A	-1	1	NONE	PUBLIC
1173	trc_des_tarf_w	Specifies the W axis of a TARF position (the complete TARF UVW vector may specify either a displacement from the current position, or an origin around which to rotate), (Precision: TBD) , (Accuracy: TBD)	CAE_INVALID	NUMBER	FLOAT8	N/A	-1	1	NONE	PUBLIC
1174	trc_des_delta_rof	Commanded change in ROF angle, (Precision: TBD) , (Accuracy: TBD)	CAE_INVALID	NUMBER	FLOAT4	degrees	-6	6	SET	PUBLIC
1175	**Command**	**Description**	**NeedDate**	**Visibility**	**CmdVers**	**DestID**	**CmdID**			
1176	ta_trc.trc_mtbs_centroid	To move the TA such that the centroid of the specified AOI is positioned at the boresight of the associated imager at the specified angle of rotation	CAE_INVALID	PUBLIC	1	0	15			
1177	**Argument**	**Arg_Description**	**NeedDate**	**Form**	**Representation**	**units**	**LoLimit**	**HiLimit**	**ValueType**	**Visibility**
1178	trc_des_aoi_id	Unique number used to designate a specific AOI, (Precision: N/A) , (Accuracy: N/A)	CAE_INVALID	NUMBER	INT4	N/A	1	8	NONE	PUBLIC
1179	trc_des_delta_rof	Commanded change in ROF angle, (Precision: TBD) , (Accuracy: TBD)	CAE_INVALID	NUMBER	FLOAT4	degrees	-6	6	SET	PUBLIC
1180	**Command**	**Description**	**NeedDate**	**Visibility**	**CmdVers**	**DestID**	**CmdID**			
1181	ta_trc.trc_mtbs_inertial	To move the TA such that the specified IRF position is at the defined boresight location	CAE_INVALID	PUBLIC	1	0	16			
1182	**Argument**	**Arg_Description**	**NeedDate**	**Form**	**Representation**	**units**	**LoLimit**	**HiLimit**	**ValueType**	**Visibility**
1183	trc_des_irf_u	Specifies the U axis of an IRF position to move to the boresight, (Precision: TBD) , (Accuracy: TBD)	CAE_INVALID	NUMBER	FLOAT8	N/A	-1	1	NONE	PUBLIC
1184	trc_des_irf_v	Specifies the V axis of an IRF position to move to the boresight, (Precision: TBD) , (Accuracy: TBD)	CAE_INVALID	NUMBER	FLOAT8	N/A	-1	1	NONE	PUBLIC
1185	trc_des_irf_w	Specifies the W axis of an IRF position to move to the boresight, (Precision: TBD) , (Accuracy: TBD)	CAE_INVALID	NUMBER	FLOAT8	N/A	-1	1	NONE	PUBLIC
1186	trc_des_delta_rof	Commanded change in ROF angle, (Precision: TBD) , (Accuracy: TBD)	CAE_INVALID	NUMBER	FLOAT4	degrees	-6	6	SET	PUBLIC
1187	**Command**	**Description**	**NeedDate**	**Visibility**	**CmdVers**	**DestID**	**CmdID**			
1188	ta_trc.trc_nod_define	To define the distance and direction for nods, as well as whether and how to return the TA to TRACKING mode	CAE_INVALID	PUBLIC	1	0	17			
1189	**Argument**	**Arg_Description**	**NeedDate**	**Form**	**Representation**	**units**	**LoLimit**	**HiLimit**	**ValueType**	**Visibility**
1190	trc_des_nod_offset_ab_quat	Quaternion component, (Precision: TBD) , (Accuracy: TBD) , [Matrix size: (min: 1), (max: 1)] Specifies the rotation of TARF (in AB direction) to execute for nods, [Quat_elem: (min: 4), (max: 4)]	CAE_INVALID	NUMBER	FLOAT8	N/A	-1	1	NONE	PUBLIC

	A	B	C	D	E	F	G	H	I	J
1191	trc_des_nod_a_tracking_command	Tracking command to use when arriving at nod position A, (Precision: N/A) , (Accuracy: N/A) , [ENUM: (1: TRC_MODE_POSITIONING) (2: TRC_MODE_TRACKING_CENTROID_ON_AXIS) (3: TRC_MODE_TRACKING_CENTROID_OFFSET) (4: TRC_MODE_TRACKING_LIMB)]	CAE_INVALID	ENUM	UINT4	N/A	1	4	NONE	PUBLIC
1192	trc_des_nod_a_tracking_p1	Parameter 1 for trc_des_nod_a_tracking_command, (Precision: N/A) , (Accuracy: N/A)	CAE_INVALID	NUMBER	UINT4	N/A	0	4294967295	NONE	PUBLIC
1193	trc_des_nod_a_tracking_p2	Parameter 2 for trc_des_nod_a_tracking_command, (Precision: N/A) , (Accuracy: N/A)	CAE_INVALID	NUMBER	UINT4	N/A	0	4294967295	NONE	PUBLIC
1194	trc_des_nod_a_tracking_p3	Parameter 3 for trc_des_nod_a_tracking_command, (Precision: N/A) , (Accuracy: N/A)	CAE_INVALID	NUMBER	UINT4	N/A	0	4294967295	NONE	PUBLIC
1195	trc_des_nod_a_tracking_p4	Parameter 4 for trc_des_nod_a_tracking_command, (Precision: 15 sig. digits) , (Accuracy: N/A)	CAE_INVALID	NUMBER	FLOAT8	N/A	-1.79769E308	1.79769E308	NONE	PUBLIC
1196	trc_des_nod_a_tracking_p5	Parameter 5 for trc_des_nod_a_tracking_command, (Precision: 15 sig. digits) , (Accuracy: N/A)	CAE_INVALID	NUMBER	FLOAT8	N/A	-1.79769E308	1.79769E308	NONE	PUBLIC
1197	trc_des_nod_a_tracking_p6	Parameter 6 for trc_des_nod_a_tracking_command, (Precision: 15 sig. digits) , (Accuracy: N/A)	CAE_INVALID	NUMBER	FLOAT8	N/A	-1.79769E308	1.79769E308	NONE	PUBLIC
1198	trc_des_nod_a_tracking_p7	Parameter 7 for trc_des_nod_a_tracking_command, (Precision: 15 sig. digits) , (Accuracy: N/A)	CAE_INVALID	NUMBER	FLOAT8	N/A	-1.79769E308	1.79769E308	NONE	PUBLIC
1199	trc_des_nod_a_rof_status	Whether to enable ROF compensation for nod position A, (Precision: N/A) , (Accuracy: N/A) , [ENUM: (0: NO) (1: YES)]	CAE_INVALID	ENUM	UINT4	N/A	0	1	NONE	PUBLIC
1200	trc_des_nod_a_aoi_rof_1	ROF 1 AOI for nod position A, (Precision: N/A) , (Accuracy: N/A)	CAE_INVALID	NUMBER	INT4	N/A	1	8	NONE	PUBLIC
1201	trc_des_nod_a_aoi_rof_2	ROF 2 AOI for nod position A, (Precision: N/A) , (Accuracy: N/A)	CAE_INVALID	NUMBER	INT4	N/A	1	8	NONE	PUBLIC
1202	trc_des_nod_b_tracking_command	Tracking command to use when arriving at nod position B, (Precision: N/A) , (Accuracy: N/A) , [ENUM: (1: TRC_MODE_POSITIONING) (2: TRC_MODE_TRACKING_CENTROID_ON_AXIS) (3: TRC_MODE_TRACKING_CENTROID_OFFSET) (4: TRC_MODE_TRACKING_LIMB)]	CAE_INVALID	ENUM	UINT4	N/A	1	4	NONE	PUBLIC
1203	trc_des_nod_b_tracking_p1	Parameter 1 for trc_des_nod_b_tracking_command, (Precision: N/A) , (Accuracy: N/A)	CAE_INVALID	NUMBER	UINT4	N/A	0	4294967295	NONE	PUBLIC
1204	trc_des_nod_b_tracking_p2	Parameter 2 for trc_des_nod_b_tracking_command, (Precision: N/A) , (Accuracy: N/A)	CAE_INVALID	NUMBER	UINT4	N/A	0	4294967295	NONE	PUBLIC

	A	B	C	D	E	F	G	H	I	J
1205	trc_des_nod_b_tracking_p3	Parameter 3 for trc_des_nod_b_tracking_command, (Precision: N/A) , (Accuracy: N/A)	CAE_INVALID	NUMBER	UINT4	N/A	0	4294967295	NONE	PUBLIC
1206	trc_des_nod_b_tracking_p4	Parameter 4 for trc_des_nod_b_tracking_command, (Precision: 15 sig. digits) , (Accuracy: N/A)	CAE_INVALID	NUMBER	FLOAT8	N/A	-1.79769E308	1.79769E308	NONE	PUBLIC
1207	trc_des_nod_b_tracking_p5	Parameter 5 for trc_des_nod_b_tracking_command, (Precision: 15 sig. digits) , (Accuracy: N/A)	CAE_INVALID	NUMBER	FLOAT8	N/A	-1.79769E308	1.79769E308	NONE	PUBLIC
1208	trc_des_nod_b_tracking_p6	Parameter 6 for trc_des_nod_b_tracking_command, (Precision: 15 sig. digits) , (Accuracy: N/A)	CAE_INVALID	NUMBER	FLOAT8	N/A	-1.79769E308	1.79769E308	NONE	PUBLIC
1209	trc_des_nod_b_tracking_p7	Parameter 7 for trc_des_nod_b_tracking_command, (Precision: 15 sig. digits) , (Accuracy: N/A)	CAE_INVALID	NUMBER	FLOAT8	N/A	-1.79769E308	1.79769E308	NONE	PUBLIC
1210	trc_des_nod_b_rof_status	Whether to enable ROF compensation for nod position B, (Precision: N/A) , (Accuracy: N/A) , [ENUM: (0: NO) (1: YES)]	CAE_INVALID	ENUM	UINT4	N/A	0	1	NONE	PUBLIC
1211	trc_des_nod_b_aoi_rof_1	ROF 1 AOI for nod position B, (Precision: N/A) , (Accuracy: N/A)	CAE_INVALID	NUMBER	INT4	N/A	1	8	NONE	PUBLIC
1212	trc_des_nod_b_aoi_rof_2	ROF 2 AOI for nod position B, (Precision: N/A) , (Accuracy: N/A)	CAE_INVALID	NUMBER	INT4	N/A	1	8	NONE	PUBLIC
1213	**Command**	**Description**	**NeedDate**	**Visibility**	**CmdVers**	**DestID**	**CmdID**			
1214	ta_trc.trc_nod_execute_ab	To move the TA between two positions, while enabling a useful tracking configuration in each position	CAE_INVALID	PUBLIC	1	0	18			
1215	**Command**	**Description**	**NeedDate**	**Visibility**	**CmdVers**	**DestID**	**CmdID**			
1216	ta_trc.trc_nod_execute_ba	To move the TA between two positions, while enabling a useful tracking configuration in each position	CAE_INVALID	PUBLIC	1	0	19			
1217	**Command**	**Description**	**NeedDate**	**Visibility**	**CmdVers**	**DestID**	**CmdID**			
1218	ta_trc.trc_tweak_position_move	To move the TA a small distance in TARF coordinates during Positioning mode	CAE_INVALID	PUBLIC	1	0	20			
1219	**Argument**	**Arg_Description**	**NeedDate**	**Form**	**Representation**	**units**	**LoLimit**	**HiLimit**	**ValueType**	**Visibility**
1220	trc_des_delta_el	Specifies relative tweak displacement as a rotation about the TARF U axis, (Precision: TBD) , (Accuracy: TBD)	CAE_INVALID	NUMBER	FLOAT4	arcseconds	-10	10	SET	PUBLIC
1221	trc_des_delta_xel	Specifies relative tweak displacement as a rotation about the TARF V axis, (Precision: TBD) , (Accuracy: TBD)	CAE_INVALID	NUMBER	FLOAT4	arcseconds	-10	10	SET	PUBLIC
1222	**Command**	**Description**	**NeedDate**	**Visibility**	**CmdVers**	**DestID**	**CmdID**			
1223	ta_trc.trc_tweak_position_set	To adjust the Tracking Position during tracking	CAE_INVALID	PUBLIC	1	0	21			
1224	**Argument**	**Arg_Description**	**NeedDate**	**Form**	**Representation**	**units**	**LoLimit**	**HiLimit**	**ValueType**	**Visibility**
1225	trc_des_delta_el	Specifies relative tweak displacement as a rotation about the TARF U axis, (Precision: TBD) , (Accuracy: TBD)	CAE_INVALID	NUMBER	FLOAT4	arcseconds	-10	10	SET	PUBLIC

	A	B	C	D	E	F	G	H	I	J
1226	trc_des_delta_xel	Specifies relative tweak displacement as a rotation about the TARF V axis, (Precision: TBD) , (Accuracy: TBD)	CAE_INVALID	NUMBER	FLOAT4	arcseconds	-10	10	SET	PUBLIC
1227	**Command**	**Description**	**NeedDate**	**Visibility**	**CmdVers**	**DestID**	**CmdID**			
1228	ta_trc.trc_fd_trc_offset	Equivalent to TSC command TSC_FD_TRC_OFFSET	CAE_INVALID	PUBLIC	1	0	22			
1229	**Argument**	**Arg_Description**	**NeedDate**	**Form**	**Representation**	**units**	**LoLimit**	**HiLimit**	**ValueType**	**Visibility**
1230	fd_des_trc_offset_quat	offset attitude quaternion component, (Precision: TBD) , (Accuracy: TBD) , [Matrix size: (min: 1), (max: 1)] offset attitude quaternion with regard to TARF, [Quat_elem: (min: 4), (max: 4)]	CAE_INVALID	NUMBER	FLOAT8	N/A	-1	1	NONE	PUBLIC
1231	trc_offset_timestamp	time at offset determination, (Precision: 1 ns) , (Accuracy: 1 ms)	CAE_INVALID	NUMBER	TIME8	N/A	0	2147483647	NONE	PUBLIC
1232	**Command**	**Description**	**NeedDate**	**Visibility**	**CmdVers**	**DestID**	**CmdID**			
1233	ta_trc.trc_atc_pos_corr	Equivalent to TSC command TSC_ATC_POS_CORR	CAE_INVALID	PUBLIC	1	0	23			
1234	**Argument**	**Arg_Description**	**NeedDate**	**Form**	**Representation**	**units**	**LoLimit**	**HiLimit**	**ValueType**	**Visibility**
1235	atc_des_pos_corr_quat	correction attitude quaternion component, (Precision: TBD) , (Accuracy: TBD) , [Matrix size: (min: 1), (max: 1)] correction attitude quaternion with regard to TARF, [Quat_elem: (min: 4), (max: 4)]	CAE_INVALID	NUMBER	FLOAT8	N/A	-1	1	NONE	PUBLIC
1236	trc_drift_quality_index	quality of image evaluation, (Precision: TBD) , (Accuracy: TBD)	CAE_INVALID	NUMBER	FLOAT4	N/A	0	1	NONE	PUBLIC
1237	trc_drift_imager_index	accuracy of imager in use, (Precision: TBD) , (Accuracy: TBD)	CAE_INVALID	NUMBER	FLOAT4	N/A	0	1	NONE	PUBLIC
1238	atc_des_corr_mode	correction mode used by the servo system, (Precision: N/A) , (Accuracy: N/A) , [ENUM: (1: IMMEDIATE) (2: ESTIMATE) (3: IMMEDIATE_ESTIMATE)]	CAE_INVALID	ENUM	UINT1	N/A	1	3	NONE	PUBLIC
1239	atc_des_drift_est_control	controls the estimation algorithm for gyro drift estimation, (Precision: N/A) , (Accuracy: N/A) , [ENUM: (1: RESET_EL_XEL) (2: RESET_LOS) (3: CONT_EL_XEL) (4: CONT_LOS) (5: NO_DRIFT)]	CAE_INVALID	ENUM	UINT1	N/A	1	5	NONE	PUBLIC
1240	trc_drift_timestamp	time at center of image exposure time, (Precision: 1 ns) , (Accuracy: 1 ms)	CAE_INVALID	NUMBER	TIME8	N/A	0	2147483647	NONE	PUBLIC
1241	trc_drift_exposure_time	duration of image exposure, (Precision: TBD) , (Accuracy: TBD)	CAE_INVALID	NUMBER	UINT2	milliseconds	10	10000	SET	PUBLIC
1242	**Command**	**Description**	**NeedDate**	**Visibility**	**CmdVers**	**DestID**	**CmdID**			
1243	ta_trc.trc_atc_traj_est	Equivalent to TSC command TSC_ATC_TRAJ_EST	CAE_INVALID	PUBLIC	1	0	24			
1244	**Argument**	**Arg_Description**	**NeedDate**	**Form**	**Representation**	**units**	**LoLimit**	**HiLimit**	**ValueType**	**Visibility**
1245	atc_des_traj_dev_quat	deviation attitude quaternion component, (Precision: TBD) , (Accuracy: TBD) , [Matrix size: (min: 1), (max: 1)] deviation attitude quaternion with regard to TARF, [Quat_elem: (min: 4), (max: 4)]	CAE_INVALID	NUMBER	FLOAT8	N/A	-1	1	NONE	PUBLIC

	A	B	C	D	E	F	G	H	I	J
1246	trc_traj_quality_index	noise on deviation measurement, (Precision: TBD) , (Accuracy: TBD)	CAE_INVALID	NUMBER	FLOAT4	N/A	0	1	NONE	PUBLIC
1247	trc_traj_imager_index	accuracy of imager in use, (Precision: TBD) , (Accuracy: TBD)	CAE_INVALID	NUMBER	FLOAT4	N/A	0	1	NONE	PUBLIC
1248	atc_des_traj_est_control	controls the estimation algorithm for object trajectory estimation, (Precision: N/A) , (Accuracy: N/A) , [ENUM: (1: RESET_EL_XEL) (3: CONT_EL_XEL) (4: NO_TRAJ)]	CAE_INVALID	ENUM	UINT1	N/A	1	4	NONE	PUBLIC
1249	trc_traj_timestamp	time at middle of image exposure time, (Precision: 1 ns) , (Accuracy: 1 ms)	CAE_INVALID	NUMBER	TIME8	N/A	0	2147483647	NONE	PUBLIC
1250	trc_traj_exposure_time	duration of image exposure, (Precision: TBD) , (Accuracy: TBD)	CAE_INVALID	NUMBER	UINT2	milliseconds	10	10000	SET	PUBLIC
1251	**Command**	**Description**	**NeedDate**	**Visibility**	**CmdVers**	**DestID**	**CmdID**			
1252	ta_trc.trc_fd_stop	Equivalent to TSC command TSC_FD_STOP	CAE_INVALID	PUBLIC	1	0	25			
1253	**Command**	**Description**	**NeedDate**	**Visibility**	**CmdVers**	**DestID**	**CmdID**			
1254	ta_trc.trc_focus_goto	To move the FPI to the indicated absolute focus position	CAE_INVALID	PUBLIC	1	0	26			
1255	**Argument**	**Arg_Description**	**NeedDate**	**Form**	**Representation**	**units**	**LoLimit**	**HiLimit**	**ValueType**	**Visibility**
1256	trc_des_focus_abs_position	Absolute position for the FPI focus mechanism, (Precision: TBD) , (Accuracy: TBD)	CAE_INVALID	NUMBER	FLOAT4	millimeters	-300	300	SET	PUBLIC
1257	**Command**	**Description**	**NeedDate**	**Visibility**	**CmdVers**	**DestID**	**CmdID**			
1258	ta_trc.trc_focus_move	To move the FPI to the indicated relative distance from the current focus position	CAE_INVALID	PUBLIC	1	0	27			
1259	**Argument**	**Arg_Description**	**NeedDate**	**Form**	**Representation**	**units**	**LoLimit**	**HiLimit**	**ValueType**	**Visibility**
1260	trc_des_focus_rel_position	Relative position for the FPI focus mechanism as a displacement from its current position, (Precision: TBD) , (Accuracy: TBD)	CAE_INVALID	NUMBER	FLOAT4	millimeters	-600	600	SET	PUBLIC
1261	**Command**	**Description**	**NeedDate**	**Visibility**	**CmdVers**	**DestID**	**CmdID**			
1262	ta_trc.trc_focus_position	To move the FPI focus position to the same back focus position as the SI	CAE_INVALID	PUBLIC	1	0	28			
1263	**Argument**	**Arg_Description**	**NeedDate**	**Form**	**Representation**	**units**	**LoLimit**	**HiLimit**	**ValueType**	**Visibility**
1264	trc_des_focus_si_position	Back focus position of the SI to which the FPI focus position must be adjusted, (Precision: TBD) , (Accuracy: TBD)	CAE_INVALID	NUMBER	FLOAT4	millimeters	-600	600	SET	PUBLIC
1265	**Command**	**Description**	**NeedDate**	**Visibility**	**CmdVers**	**DestID**	**CmdID**			
1266	ta_trc.trc_focus_auto	To perform autofocus of the FPI using the centroid in the indicated AOI as the image to be optimized	CAE_INVALID	PUBLIC	1	0	29			
1267	**Argument**	**Arg_Description**	**NeedDate**	**Form**	**Representation**	**units**	**LoLimit**	**HiLimit**	**ValueType**	**Visibility**
1268	trc_des_aoi_id	Unique number used to designate a specific AOI, (Precision: N/A) , (Accuracy: N/A)	CAE_INVALID	NUMBER	INT4	N/A	1	8	NONE	PUBLIC
1269	trc_des_timeout	Maximum time to wait for TRC_FOCUS_AUTO command to complete, (Precision: TBD) , (Accuracy: TBD)	CAE_INVALID	NUMBER	UINT4	seconds	1	90	SET	PUBLIC

	A	B	C	D	E	F	G	H	I	J
1270	**Command**	**Description**	**NeedDate**	**Visibility**	**CmdVers**	**DestID**	**CmdID**			
1271	ta_trc.trc_camera_speed	Sets the speed and binning options for the indicated camera	CAE_INVALID	PUBLIC	1	0	31			
1272	**Argument**	**Arg_Description**	**NeedDate**	**Form**	**Representation**	**units**	**LoLimit**	**HiLimit**	**ValueType**	**Visibility**
1273	trc_des_camera_id	Designates one of the three imagers, (Precision: N/A) , (Accuracy: N/A) , [ENUM: (0: WFI) (1: FFI) (2: FPI)]	CAE_INVALID	ENUM	UINT4	N/A	0	2	NONE	PUBLIC
1274	trc_des_camera_pixel_format	Number of bits to use in specifying image information, (Precision: N/A) , (Accuracy: N/A) , [ENUM: (0: 8_BIT_IMAGE) (1: 14_BIT_IMAGE)]	CAE_INVALID	ENUM	INT4	N/A	0	1	NONE	PUBLIC
1275	trc_des_camera_pixel_grouping	Amount of pixel binning to use in capturing images with the camera, (Precision: N/A) , (Accuracy: N/A) , [ENUM: (0: 1x1) (1: 2x2) (2: 4x4)]	CAE_INVALID	ENUM	INT4	N/A	0	2	NONE	PUBLIC
1276	**Command**	**Description**	**NeedDate**	**Visibility**	**CmdVers**	**DestID**	**CmdID**			
1277	ta_trc.trc_camera_integration	Sets the integration time for the indicated camera	CAE_INVALID	PUBLIC	1	0	32			
1278	**Argument**	**Arg_Description**	**NeedDate**	**Form**	**Representation**	**units**	**LoLimit**	**HiLimit**	**ValueType**	**Visibility**
1279	trc_des_camera_id	Designates one of the three imagers, (Precision: N/A) , (Accuracy: N/A) , [ENUM: (0: WFI) (1: FFI) (2: FPI)]	CAE_INVALID	ENUM	UINT4	N/A	0	2	NONE	PUBLIC
1280	trc_des_camera_integration_time	Integration time for a selected camera, (Precision: 1) , (Accuracy: N/A)	CAE_INVALID	NUMBER	INT4	milliseconds	10	10000	SET	PUBLIC
1281	**Command**	**Description**	**NeedDate**	**Visibility**	**CmdVers**	**DestID**	**CmdID**			
1282	ta_trc.trc_camera_test	Turns test mode on/off for the indicated camera	CAE_INVALID	PUBLIC	1	0	33			
1283	**Argument**	**Arg_Description**	**NeedDate**	**Form**	**Representation**	**units**	**LoLimit**	**HiLimit**	**ValueType**	**Visibility**
1284	trc_des_camera_id	Designates one of the three imagers, (Precision: N/A) , (Accuracy: N/A) , [ENUM: (0: WFI) (1: FFI) (2: FPI)]	CAE_INVALID	ENUM	UINT4	N/A	0	2	NONE	PUBLIC
1285	trc_des_camera_test_control	Whether or not to put the specified camera in test mode (sending data directly to MCCS), (Precision: N/A) , (Accuracy: N/A) , [ENUM: (0: NO) (1: YES)]	CAE_INVALID	ENUM	UINT4	N/A	0	1	NONE	PUBLIC
1286	**Command**	**Description**	**NeedDate**	**Visibility**	**CmdVers**	**DestID**	**CmdID**			
1287	ta_trc.trc_camera_sync	Controls the execution of the timing file within the specified camera controller	CAE_INVALID	PUBLIC	1	0	30			
1288	**Argument**	**Arg_Description**	**NeedDate**	**Form**	**Representation**	**units**	**LoLimit**	**HiLimit**	**ValueType**	**Visibility**
1289	trc_des_camera_id	Designates one of the three imagers, (Precision: N/A) , (Accuracy: N/A) , [ENUM: (0: WFI) (1: FFI) (2: FPI)]	CAE_INVALID	ENUM	UINT4	N/A	0	2	NONE	PUBLIC
1290	trc_des_camera_control	Control command to send to specified camera HOLD stops camera operation, START restarts camera operation, and SYNC performs a HOLD-START sequence, (Precision: N/A) , (Accuracy: N/A) , [ENUM: (2: SYNC) (3: HOLD) (4: START)]	CAE_INVALID	ENUM	UINT4	N/A	2	4	NONE	PUBLIC
1291	**Command**	**Description**	**NeedDate**	**Visibility**	**CmdVers**	**DestID**	**CmdID**			

	A	B	C	D	E	F	G	H	I	J
1292	ta_trc.trc_filter_home	Returns the indicated filter to the home position and re-initializes the relative filter position reference system	CAE_INVALID	PUBLIC	1	0	34			
1293	**Argument**	**Arg_Description**	**NeedDate**	**Form**	**Representation**	**units**	**LoLimit**	**HiLimit**	**ValueType**	**Visibility**
1294	trc_des_camera_id	Designates one of the three imagers, (Precision: N/A) , (Accuracy: N/A) , [ENUM: (0: WFI) (1: FFI) (2: FPI)]	CAE_INVALID	ENUM	UINT4	N/A	0	2	NONE	PUBLIC
1295	**Command**	**Description**	**NeedDate**	**Visibility**	**CmdVers**	**DestID**	**CmdID**			
1296	ta_trc.trc_filter_select	Positions the designated filter over the optics for the specified camera	CAE_INVALID	PUBLIC	1	0	35			
1297	**Argument**	**Arg_Description**	**NeedDate**	**Form**	**Representation**	**units**	**LoLimit**	**HiLimit**	**ValueType**	**Visibility**
1298	trc_des_camera_id	Designates one of the three imagers, (Precision: N/A) , (Accuracy: N/A) , [ENUM: (0: WFI) (1: FFI) (2: FPI)]	CAE_INVALID	ENUM	UINT4	N/A	0	2	NONE	PUBLIC
1299	trc_des_filter_number	Specifies the filter to be applied to the specified camera, (Precision: N/A) , (Accuracy: N/A) , [ENUM: (0: HOME) (1: CLOSED) (2: FILTER_1) (3: FILTER_2) (4: FILTER_3) (5: FILTER_4) (6: FILTER_5)]	CAE_INVALID	ENUM	INT4	N/A	0	6	NONE	PUBLIC
1300	**Command**	**Description**	**NeedDate**	**Visibility**	**CmdVers**	**DestID**	**CmdID**			
1301	ta_trc.trc_reticle_show	Sets the display intensity of the FPI camera reticle	CAE_INVALID	PUBLIC	1	0	36			
1302	**Argument**	**Arg_Description**	**NeedDate**	**Form**	**Representation**	**units**	**LoLimit**	**HiLimit**	**ValueType**	**Visibility**
1303	trc_des_reticle_intensity	Brightness of the Reticle (0 means do not show the reticle), (Precision: TBD) , (Accuracy: TBD)	CAE_INVALID	NUMBER	FLOAT4	N/A	0	1	NONE	PUBLIC
1304	**Command**	**Description**	**NeedDate**	**Visibility**	**CmdVers**	**DestID**	**CmdID**			
1305	ta_trc.trc_init	Initializes the TRC for operations	CAE_INVALID	PUBLIC	1	0	37			
1306	**Argument**	**Arg_Description**	**NeedDate**	**Form**	**Representation**	**units**	**LoLimit**	**HiLimit**	**ValueType**	**Visibility**
1307	trc_des_init	Specifies which devices to initialize, (Precision: N/A) , (Accuracy: N/A) , [ENUM: (0: ALL) (1: WFI) (2: FFI) (3: FPI) (4: FILTER_WFI) (5: FILTER_FFI) (6: FILTER_FPI) (7: FPI_FOCUS)]	CAE_INVALID	ENUM	UINT4	N/A	0	7	NONE	PUBLIC
1308	**Command**	**Description**	**NeedDate**	**Visibility**	**CmdVers**	**DestID**	**CmdID**			
1309	ta_trc.trc_bit	Performs basic tests of TRC functionality	CAE_INVALID	PUBLIC	1	0	38			
1310	**Command**	**Description**	**NeedDate**	**Visibility**	**CmdVers**	**DestID**	**CmdID**			
1311	ta_trc.trc_drift_limit	Sets limits used by the various tracking algorithms	CAE_INVALID	PUBLIC	1	0	39			
1312	**Argument**	**Arg_Description**	**NeedDate**	**Form**	**Representation**	**units**	**LoLimit**	**HiLimit**	**ValueType**	**Visibility**
1313	trc_des_limit_drift	Specifies the maximum total distance that the gyro system's IRF is allowed to drift in the TARF U/V directions, (Precision: TBD) , (Accuracy: TBD)	CAE_INVALID	NUMBER	FLOAT4	arcseconds	0	600	SET	PUBLIC
1314	trc_des_limit_acquisition	Specifies the maximum error allowed in an initial telescope position command, (Precision: TBD) , (Accuracy: TBD)	CAE_INVALID	NUMBER	FLOAT4	arcseconds	0	600	SET	PUBLIC

	A	B	C	D	E	F	G	H	I	J
1315	trc_des_limit_rof	Specifies the maximum rotation that the gyro system's IRF is allowed to drift in rotation, (Precision: TBD) , (Accuracy: TBD)	CAE_INVALID	NUMBER	FLOAT4	arcseconds	0	3600	SET	PUBLIC
1316	**Command**	**Description**	**NeedDate**	**Visibility**	**CmdVers**	**DestID**	**CmdID**			
1317	ta_trc.trc_darkfield_acquisition	Performs all the necessary processing to create a darkfield image for the designated camera	CAE_INVALID	PUBLIC	1	0	40			
1318	**Argument**	**Arg_Description**	**NeedDate**	**Form**	**Representation**	**units**	**LoLimit**	**HiLimit**	**ValueType**	**Visibility**
1319	trc_des_camera_id	Designates one of the three imagers, (Precision: N/A) , (Accuracy: N/A) , [ENUM: (0: WFI) (1: FFI) (2: FPI)]	CAE_INVALID	ENUM	UINT4	N/A	0	2	NONE	PUBLIC
1320	trc_des_average	Number of darkfield images to take and average, (Precision: N/A) , (Accuracy: N/A)	CAE_INVALID	NUMBER	INT4	N/A	1	20	NONE	PUBLIC
1321	**Command**	**Description**	**NeedDate**	**Visibility**	**CmdVers**	**DestID**	**CmdID**			
1322	ta_trc.trc_darkfield_store	Stores the darkfield image for the designated camera to permanent storage (flash memory)	CAE_INVALID	PUBLIC	1	0	41			
1323	**Argument**	**Arg_Description**	**NeedDate**	**Form**	**Representation**	**units**	**LoLimit**	**HiLimit**	**ValueType**	**Visibility**
1324	trc_des_camera_id	Designates one of the three imagers, (Precision: N/A) , (Accuracy: N/A) , [ENUM: (0: WFI) (1: FFI) (2: FPI)]	CAE_INVALID	ENUM	UINT4	N/A	0	2	NONE	PUBLIC
1325	**Command**	**Description**	**NeedDate**	**Visibility**	**CmdVers**	**DestID**	**CmdID**			
1326	ta_trc.trc_darkfield_load	Loads the darkfield image for the designated camera from permanent storage (flash memory) into the operating RAM buffer	CAE_INVALID	PUBLIC	1	0	42			
1327	**Argument**	**Arg_Description**	**NeedDate**	**Form**	**Representation**	**units**	**LoLimit**	**HiLimit**	**ValueType**	**Visibility**
1328	trc_des_camera_id	Designates one of the three imagers, (Precision: N/A) , (Accuracy: N/A) , [ENUM: (0: WFI) (1: FFI) (2: FPI)]	CAE_INVALID	ENUM	UINT4	N/A	0	2	NONE	PUBLIC
1329	**Command**	**Description**	**NeedDate**	**Visibility**	**CmdVers**	**DestID**	**CmdID**			
1330	ta_trc.trc_darkfield_get	Transfers the current darkfield image for the designated camera via the video interface to the MCCS	CAE_INVALID	PUBLIC	1	0	43			
1331	**Argument**	**Arg_Description**	**NeedDate**	**Form**	**Representation**	**units**	**LoLimit**	**HiLimit**	**ValueType**	**Visibility**
1332	trc_des_camera_id	Designates one of the three imagers, (Precision: N/A) , (Accuracy: N/A) , [ENUM: (0: WFI) (1: FFI) (2: FPI)]	CAE_INVALID	ENUM	UINT4	N/A	0	2	NONE	PUBLIC
1333	**Command**	**Description**	**NeedDate**	**Visibility**	**CmdVers**	**DestID**	**CmdID**			
1334	ta_trc.trc_flatfield_get	Transfers the current flatfield image for the designated camera via the video interface to the MCCS	CAE_INVALID	PUBLIC	1	0	44			
1335	**Argument**	**Arg_Description**	**NeedDate**	**Form**	**Representation**	**units**	**LoLimit**	**HiLimit**	**ValueType**	**Visibility**
1336	trc_des_camera_id	Designates one of the three imagers, (Precision: N/A) , (Accuracy: N/A) , [ENUM: (0: WFI) (1: FFI) (2: FPI)]	CAE_INVALID	ENUM	UINT4	N/A	0	2	NONE	PUBLIC
1337	**Command**	**Description**	**NeedDate**	**Visibility**	**CmdVers**	**DestID**	**CmdID**			

	A	B	C	D	E	F	G	H	I	J
1338	ta_trc.trc_version_get	Returns the current software version string stored in the TRC flash memory	CAE_INVALID	PUBLIC	1	0	45			
1339	**Command**	**Description**	**NeedDate**	**Visibility**	**CmdVers**	**DestID**	**CmdID**			
1340	ta_trc.trc_housekeeping_define	Controls which housekeeping buffers are returned at the specified interval	CAE_INVALID	PUBLIC	1	0	46			
1341	**Argument**	**Arg_Description**	**NeedDate**	**Form**	**Representation**	**units**	**LoLimit**	**HiLimit**	**ValueType**	**Visibility**
1342	trc_des_hk_rate	Frequency to send selected HK data sets as a multiple of the basic cycle rate (50 ms). A value of 0 turns off the sending of HK data, (Precision: N/A) , (Accuracy: N/A)	CAE_INVALID	NUMBER	INT4	N/A	0	100	NONE	PUBLIC
1343	trc_des_status_table	Specifies whether to send table in HK data, (Precision: N/A) , (Accuracy: N/A) , [ENUM: (0: OFF) (1: ON)]	CAE_INVALID	ENUM	UINT4	N/A	0	1	NONE	PUBLIC
1344	trc_des_main_aoi_table	Specifies whether to send table in HK data, (Precision: N/A) , (Accuracy: N/A) , [ENUM: (0: OFF) (1: ON)]	CAE_INVALID	ENUM	UINT4	N/A	0	1	NONE	PUBLIC
1345	trc_des_centroid_table	Specifies whether to send table in HK data, (Precision: N/A) , (Accuracy: N/A) , [ENUM: (0: OFF) (1: ON)]	CAE_INVALID	ENUM	UINT4	N/A	0	1	NONE	PUBLIC
1346	trc_des_limb_table	Specifies whether to send table in HK data, (Precision: N/A) , (Accuracy: N/A) , [ENUM: (0: OFF) (1: ON)]	CAE_INVALID	ENUM	UINT4	N/A	0	1	NONE	PUBLIC
1347	trc_des_boresight_table	Specifies whether to send table in HK data, (Precision: N/A) , (Accuracy: N/A) , [ENUM: (0: OFF) (1: ON)]	CAE_INVALID	ENUM	UINT4	N/A	0	1	NONE	PUBLIC
1348	trc_des_tracking_table	Specifies whether to send table in HK data, (Precision: N/A) , (Accuracy: N/A) , [ENUM: (0: OFF) (1: ON)]	CAE_INVALID	ENUM	UINT4	N/A	0	1	NONE	PUBLIC
1349	trc_des_rof_table	Specifies whether to send table in HK data, (Precision: N/A) , (Accuracy: N/A) , [ENUM: (0: OFF) (1: ON)]	CAE_INVALID	ENUM	UINT4	N/A	0	1	NONE	PUBLIC
1350	trc_des_distribution_table	Specifies whether to send table in HK data, (Precision: N/A) , (Accuracy: N/A) , [ENUM: (0: OFF) (1: ON)]	CAE_INVALID	ENUM	UINT4	N/A	0	1	NONE	PUBLIC
1351	trc_des_nodding_table	Specifies whether to send table in HK data, (Precision: N/A) , (Accuracy: N/A) , [ENUM: (0: OFF) (1: ON)]	CAE_INVALID	ENUM	UINT4	N/A	0	1	NONE	PUBLIC
1352	trc_des_tascu_comm_table	Specifies whether to send table in HK data, (Precision: N/A) , (Accuracy: N/A) , [ENUM: (0: OFF) (1: ON)]	CAE_INVALID	ENUM	UINT4	N/A	0	1	NONE	PUBLIC
1353	trc_des_wfi_img_hist_table	Specifies whether to send table in HK data, (Precision: N/A) , (Accuracy: N/A) , [ENUM: (0: OFF) (1: ON)]	CAE_INVALID	ENUM	UINT4	N/A	0	1	NONE	PUBLIC
1354	trc_des_ffi_img_hist_table	Specifies whether to send table in HK data, (Precision: N/A) , (Accuracy: N/A) , [ENUM: (0: OFF) (1: ON)]	CAE_INVALID	ENUM	UINT4	N/A	0	1	NONE	PUBLIC
1355	trc_des_fpi_img_hist_table	Specifies whether to send table in HK data, (Precision: N/A) , (Accuracy: N/A) , [ENUM: (0: OFF) (1: ON)]	CAE_INVALID	ENUM	UINT4	N/A	0	1	NONE	PUBLIC

	A	B	C	D	E	F	G	H	I	J
1356	trc_des_temperature_table	Specifies whether to send table in HK data, (Precision: N/A) , (Accuracy: N/A) , [ENUM: (0: OFF) (1: ON)]	CAE_INVALID	ENUM	UINT4	N/A	0	1	NONE	PUBLIC
1357	trc_des_alignment_table	Specifies whether to send table in HK data, (Precision: N/A) , (Accuracy: N/A) , [ENUM: (0: OFF) (1: ON)]	CAE_INVALID	ENUM	UINT4	N/A	0	1	NONE	PUBLIC
1358	trc_des_wfi_control_table	Specifies whether to send table in HK data, (Precision: N/A) , (Accuracy: N/A) , [ENUM: (0: OFF) (1: ON)]	CAE_INVALID	ENUM	UINT4	N/A	0	1	NONE	PUBLIC
1359	trc_des_wfi_aoi_bs_table	Specifies whether to send table in HK data, (Precision: N/A) , (Accuracy: N/A) , [ENUM: (0: OFF) (1: ON)]	CAE_INVALID	ENUM	UINT4	N/A	0	1	NONE	PUBLIC
1360	trc_des_ffi_control_table	Specifies whether to send table in HK data, (Precision: N/A) , (Accuracy: N/A) , [ENUM: (0: OFF) (1: ON)]	CAE_INVALID	ENUM	UINT4	N/A	0	1	NONE	PUBLIC
1361	trc_des_ffi_aoi_bs_table	Specifies whether to send table in HK data, (Precision: N/A) , (Accuracy: N/A) , [ENUM: (0: OFF) (1: ON)]	CAE_INVALID	ENUM	UINT4	N/A	0	1	NONE	PUBLIC
1362	trc_des_fpi_control_table	Specifies whether to send table in HK data, (Precision: N/A) , (Accuracy: N/A) , [ENUM: (0: OFF) (1: ON)]	CAE_INVALID	ENUM	UINT4	N/A	0	1	NONE	PUBLIC
1363	trc_des_fpi_aoi_bs_table	Specifies whether to send table in HK data, (Precision: N/A) , (Accuracy: N/A) , [ENUM: (0: OFF) (1: ON)]	CAE_INVALID	ENUM	UINT4	N/A	0	1	NONE	PUBLIC
1364	**Command**	**Description**	**NeedDate**	**Visibility**	**CmdVers**	**DestID**	**CmdID**			
1365	ta_trc.trc_test_command	verify the TRC-MCS communications interface	CAE_INVALID	PUBLIC	1	0	65535			
1366	**Argument**	**Arg_Description**	**NeedDate**	**Form**	**Representation**	**units**	**LoLimit**	**HiLimit**	**ValueType**	**Visibility**
1367	send_telemetry	whether to return data in the response, (Precision: N/A) , (Accuracy: N/A) , [ENUM: (0: FALSE) (1: TRUE)]	CAE_INVALID	ENUM	UINT1	N/A	0	1	NONE	PUBLIC
1368	wait_to_respond	whether to wait before issuing response, (Precision: N/A) , (Accuracy: N/A) , [ENUM: (0: FALSE) (1: TRUE)]	CAE_INVALID	ENUM	UINT1	N/A	0	1	NONE	PUBLIC
1369	logical_l1	a logical value to return, (Precision: N/A) , (Accuracy: N/A) , [ENUM: (0: FALSE) (1: TRUE)]	CAE_INVALID	ENUM	UINT1	N/A	0	1	NONE	PUBLIC
1370	unsigned_one_byte_integer_u1	an unsigned one-byte int to return, (Precision: N/A) , (Accuracy: N/A)	CAE_INVALID	NUMBER	UINT1	N/A	0	254	NONE	PUBLIC
1371	unsigned_two_byte_integer_u2	an unsigned two-byte int to return, (Precision: N/A) , (Accuracy: N/A)	CAE_INVALID	NUMBER	UINT2	N/A	0	65535	NONE	PUBLIC
1372	unsigned_four_byte_integer_u4	an unsigned four-byte int to return, (Precision: N/A) , (Accuracy: N/A)	CAE_INVALID	NUMBER	UINT4	N/A	0	4294967295	NONE	PUBLIC
1373	signed_one_byte_integer_i1	a signed one-byte int to return, (Precision: N/A) , (Accuracy: N/A)	CAE_INVALID	NUMBER	BYTE	N/A	-128	127	NONE	PUBLIC
1374	signed_two_byte_integer_i2	a signed two-byte int to return, (Precision: N/A) , (Accuracy: N/A)	CAE_INVALID	NUMBER	INT2	N/A	-32768	32767	NONE	PUBLIC
1375	signed_four_byte_integer_i4	a signed four-byte int to return, (Precision: N/A) , (Accuracy: N/A)	CAE_INVALID	NUMBER	INT4	N/A	-2.15E+09	2147483647	NONE	PUBLIC

	A	B	C	D	E	F	G	H	I	J
1376	single_prec_float_r4	a single-precision float to return, (Precision: 6 sig. digits) , (Accuracy: N/A)	CAE_INVALID	NUMBER	FLOAT4	N/A	-3.40E+38	3.40E+38	NONE	PUBLIC
1377	double_prec_float_r8	a double-precision float to return, (Precision: 15 sig. digits) , (Accuracy: N/A)	CAE_INVALID	NUMBER	FLOAT8	N/A	-1.79769E308	1.79769E308	NONE	PUBLIC
1378	eight_byte_time_stamp_t8	a standard 8-byte timestamp to return, (Precision: 1 ns) , (Accuracy: 1 ms)	CAE_INVALID	NUMBER	TIME8	N/A	0	2147483647	NONE	PUBLIC
1379	**Command**	**Description**	**NeedDate**	**Visibility**	**CmdVers**	**DestID**	**CmdID**			
1380	ta_trc.trc_test_image	verify the Imager-MCS communications interface	CAE_INVALID	PUBLIC	1	0	65534			
1381	**Argument**	**Arg_Description**	**NeedDate**	**Form**	**Representation**	**units**	**LoLimit**	**HiLimit**	**ValueType**	**Visibility**
1382	trc_des_camera_id	Designates one of the three imagers, (Precision: N/A) , (Accuracy: N/A) , [ENUM: (0: WFI) (1: FFI) (2: FPI)]	CAE_INVALID	ENUM	UINT1	N/A	0	2	NONE	PUBLIC
1383	pixel_format	Number of bits to use per pixel in the test image, (Precision: N/A) , (Accuracy: N/A) , [ENUM: (0: 8_BIT_IMAGE) (1: 14_BIT_IMAGE)]	CAE_INVALID	ENUM	UINT1	N/A	0	1	NONE	PUBLIC
1384	pixel_grouping	Amount of pixel binning to use in the test image, (Precision: N/A) , (Accuracy: N/A) , [ENUM: (-1: UNDEFINED) (0: 1x1) (1: 2x2) (2: 4x4)]	CAE_INVALID	ENUM	BYTE	N/A	-1	2	NONE	PUBLIC
1385	**Command**	**Description**	**NeedDate**	**Visibility**	**CmdVers**	**DestID**	**CmdID**			
1386	ta_trc.trc_config_set	overrides the internal TRC software configuration data	CAE_INVALID	PUBLIC	1	0	61439			
1387	**Argument**	**Arg_Description**	**NeedDate**	**Form**	**Representation**	**units**	**LoLimit**	**HiLimit**	**ValueType**	**Visibility**
1388	size_pixel	size of CCD pixels, (Precision: N/A) , (Accuracy: N/A) , (Default Type: FIXED, Value: 0.014)	CAE_INVALID	NUMBER	FLOAT4	millimeters	N/A	N/A	NONE	PRIVATE
1389	limb_threshold	scale factor for limb threshold value calculation, (Precision: N/A) , (Accuracy: N/A) , (Default Type: FIXED, Value: 0.3)	CAE_INVALID	NUMBER	FLOAT4	N/A	N/A	N/A	NONE	PRIVATE
1390	limb_filter_0_0	edge filter matrix, (Precision: N/A) , (Accuracy: N/A) , (Default Type: FIXED, Value: -1.0)	CAE_INVALID	NUMBER	FLOAT4	N/A	N/A	N/A	NONE	PRIVATE
1391	limb_filter_0_1	edge filter matrix, (Precision: N/A) , (Accuracy: N/A) , (Default Type: FIXED, Value: 0.0)	CAE_INVALID	NUMBER	FLOAT4	N/A	N/A	N/A	NONE	PRIVATE
1392	limb_filter_0_2	edge filter matrix, (Precision: N/A) , (Accuracy: N/A) , (Default Type: FIXED, Value: 1.0)	CAE_INVALID	NUMBER	FLOAT4	N/A	N/A	N/A	NONE	PRIVATE
1393	limb_filter_1_0	edge filter matrix, (Precision: N/A) , (Accuracy: N/A) , (Default Type: FIXED, Value: -1.0)	CAE_INVALID	NUMBER	FLOAT4	N/A	N/A	N/A	NONE	PRIVATE
1394	limb_filter_1_1	edge filter matrix, (Precision: N/A) , (Accuracy: N/A) , (Default Type: FIXED, Value: 0.0)	CAE_INVALID	NUMBER	FLOAT4	N/A	N/A	N/A	NONE	PRIVATE

	A	B	C	D	E	F	G	H	I	J
1395	limb_filter_1_2	edge filter matrix, (Precision: N/A) , (Accuracy: N/A) , (Default Type: FIXED, Value: 1.0)	CAE_INVALID	NUMBER	FLOAT4	N/A	N/A	N/A	NONE	PRIVATE
1396	limb_filter_2_0	edge filter matrix, (Precision: N/A) , (Accuracy: N/A) , (Default Type: FIXED, Value: -1.0)	CAE_INVALID	NUMBER	FLOAT4	N/A	N/A	N/A	NONE	PRIVATE
1397	limb_filter_2_1	edge filter matrix, (Precision: N/A) , (Accuracy: N/A) , (Default Type: FIXED, Value: 0.0)	CAE_INVALID	NUMBER	FLOAT4	N/A	N/A	N/A	NONE	PRIVATE
1398	limb_filter_2_2	edge filter matrix, (Precision: N/A) , (Accuracy: N/A) , (Default Type: FIXED, Value: 1.0)	CAE_INVALID	NUMBER	FLOAT4	N/A	N/A	N/A	NONE	PRIVATE
1399	limb_factor_q	scale factor for limb quality index calculation, (Precision: N/A) , (Accuracy: N/A) , (Default Type: FIXED, Value: 0.3333)	CAE_INVALID	NUMBER	FLOAT4	N/A	N/A	N/A	NONE	PRIVATE
1400	cent_window_0_0	calculation window matrix for the estimation of the pixel distribution height, (Precision: N/A) , (Accuracy: N/A) , (Default Type: FIXED, Value: 1.0)	CAE_INVALID	NUMBER	FLOAT4	N/A	N/A	N/A	NONE	PRIVATE
1401	cent_window_0_1	calculation window matrix for the estimation of the pixel distribution height, (Precision: N/A) , (Accuracy: N/A) , (Default Type: FIXED, Value: 1.0)	CAE_INVALID	NUMBER	FLOAT4	N/A	N/A	N/A	NONE	PRIVATE
1402	cent_window_0_2	calculation window matrix for the estimation of the pixel distribution height, (Precision: N/A) , (Accuracy: N/A) , (Default Type: FIXED, Value: 1.0)	CAE_INVALID	NUMBER	FLOAT4	N/A	N/A	N/A	NONE	PRIVATE
1403	cent_window_0_3	calculation window matrix for the estimation of the pixel distribution height, (Precision: N/A) , (Accuracy: N/A) , (Default Type: FIXED, Value: 1.0)	CAE_INVALID	NUMBER	FLOAT4	N/A	N/A	N/A	NONE	PRIVATE
1404	cent_window_0_4	calculation window matrix for the estimation of the pixel distribution height, (Precision: N/A) , (Accuracy: N/A) , (Default Type: FIXED, Value: 1.0)	CAE_INVALID	NUMBER	FLOAT4	N/A	N/A	N/A	NONE	PRIVATE
1405	cent_window_1_0	calculation window matrix for the estimation of the pixel distribution height, (Precision: N/A) , (Accuracy: N/A) , (Default Type: FIXED, Value: 1.0)	CAE_INVALID	NUMBER	FLOAT4	N/A	N/A	N/A	NONE	PRIVATE
1406	cent_window_1_1	calculation window matrix for the estimation of the pixel distribution height, (Precision: N/A) , (Accuracy: N/A) , (Default Type: FIXED, Value: 1.0)	CAE_INVALID	NUMBER	FLOAT4	N/A	N/A	N/A	NONE	PRIVATE
1407	cent_window_1_2	calculation window matrix for the estimation of the pixel distribution height, (Precision: N/A) , (Accuracy: N/A) , (Default Type: FIXED, Value: 1.0)	CAE_INVALID	NUMBER	FLOAT4	N/A	N/A	N/A	NONE	PRIVATE

	A	B	C	D	E	F	G	H	I	J
1408	cent_window_1_3	calculation window matrix for the estimation of the pixel distribution height, (Precision: N/A) , (Accuracy: N/A) , (Default Type: FIXED, Value: 1.0)	CAE_INVALID	NUMBER	FLOAT4	N/A	N/A	N/A	NONE	PRIVATE
1409	cent_window_1_4	calculation window matrix for the estimation of the pixel distribution height, (Precision: N/A) , (Accuracy: N/A) , (Default Type: FIXED, Value: 1.0)	CAE_INVALID	NUMBER	FLOAT4	N/A	N/A	N/A	NONE	PRIVATE
1410	cent_window_2_0	calculation window matrix for the estimation of the pixel distribution height, (Precision: N/A) , (Accuracy: N/A) , (Default Type: FIXED, Value: 1.0)	CAE_INVALID	NUMBER	FLOAT4	N/A	N/A	N/A	NONE	PRIVATE
1411	cent_window_2_1	calculation window matrix for the estimation of the pixel distribution height, (Precision: N/A) , (Accuracy: N/A) , (Default Type: FIXED, Value: 1.0)	CAE_INVALID	NUMBER	FLOAT4	N/A	N/A	N/A	NONE	PRIVATE
1412	cent_window_2_2	calculation window matrix for the estimation of the pixel distribution height, (Precision: N/A) , (Accuracy: N/A) , (Default Type: FIXED, Value: 1.0)	CAE_INVALID	NUMBER	FLOAT4	N/A	N/A	N/A	NONE	PRIVATE
1413	cent_window_2_3	calculation window matrix for the estimation of the pixel distribution height, (Precision: N/A) , (Accuracy: N/A) , (Default Type: FIXED, Value: 1.0)	CAE_INVALID	NUMBER	FLOAT4	N/A	N/A	N/A	NONE	PRIVATE
1414	cent_window_2_4	calculation window matrix for the estimation of the pixel distribution height, (Precision: N/A) , (Accuracy: N/A) , (Default Type: FIXED, Value: 1.0)	CAE_INVALID	NUMBER	FLOAT4	N/A	N/A	N/A	NONE	PRIVATE
1415	cent_window_3_0	calculation window matrix for the estimation of the pixel distribution height, (Precision: N/A) , (Accuracy: N/A) , (Default Type: FIXED, Value: 1.0)	CAE_INVALID	NUMBER	FLOAT4	N/A	N/A	N/A	NONE	PRIVATE
1416	cent_window_3_1	calculation window matrix for the estimation of the pixel distribution height, (Precision: N/A) , (Accuracy: N/A) , (Default Type: FIXED, Value: 1.0)	CAE_INVALID	NUMBER	FLOAT4	N/A	N/A	N/A	NONE	PRIVATE
1417	cent_window_3_2	calculation window matrix for the estimation of the pixel distribution height, (Precision: N/A) , (Accuracy: N/A) , (Default Type: FIXED, Value: 1.0)	CAE_INVALID	NUMBER	FLOAT4	N/A	N/A	N/A	NONE	PRIVATE
1418	cent_window_3_3	calculation window matrix for the estimation of the pixel distribution height, (Precision: N/A) , (Accuracy: N/A) , (Default Type: FIXED, Value: 1.0)	CAE_INVALID	NUMBER	FLOAT4	N/A	N/A	N/A	NONE	PRIVATE
1419	cent_window_3_4	calculation window matrix for the estimation of the pixel distribution height, (Precision: N/A) , (Accuracy: N/A) , (Default Type: FIXED, Value: 1.0)	CAE_INVALID	NUMBER	FLOAT4	N/A	N/A	N/A	NONE	PRIVATE

	A	B	C	D	E	F	G	H	I	J
1420	cent_window_4_0	calculation window matrix for the estimation of the pixel distribution height, (Precision: N/A) , (Accuracy: N/A) , (Default Type: FIXED, Value: 1.0)	CAE_INVALID	NUMBER	FLOAT4	N/A	N/A	N/A	NONE	PRIVATE
1421	cent_window_4_1	calculation window matrix for the estimation of the pixel distribution height, (Precision: N/A) , (Accuracy: N/A) , (Default Type: FIXED, Value: 1.0)	CAE_INVALID	NUMBER	FLOAT4	N/A	N/A	N/A	NONE	PRIVATE
1422	cent_window_4_2	calculation window matrix for the estimation of the pixel distribution height, (Precision: N/A) , (Accuracy: N/A) , (Default Type: FIXED, Value: 1.0)	CAE_INVALID	NUMBER	FLOAT4	N/A	N/A	N/A	NONE	PRIVATE
1423	cent_window_4_3	calculation window matrix for the estimation of the pixel distribution height, (Precision: N/A) , (Accuracy: N/A) , (Default Type: FIXED, Value: 1.0)	CAE_INVALID	NUMBER	FLOAT4	N/A	N/A	N/A	NONE	PRIVATE
1424	cent_window_4_4	calculation window matrix for the estimation of the pixel distribution height, (Precision: N/A) , (Accuracy: N/A) , (Default Type: FIXED, Value: 1.0)	CAE_INVALID	NUMBER	FLOAT4	N/A	N/A	N/A	NONE	PRIVATE
1425	cent_width_limit	limit of centroid width, (Precision: N/A) , (Accuracy: N/A) , (Default Type: FIXED, Value: 1.0)	CAE_INVALID	NUMBER	FLOAT4	N/A	N/A	N/A	NONE	PRIVATE
1426	cent_factor_q	scale factor for the centroid quality, (Precision: N/A) , (Accuracy: N/A) , (Default Type: FIXED, Value: 10.0)	CAE_INVALID	NUMBER	FLOAT4	N/A	N/A	N/A	NONE	PRIVATE
1427	dark_fmt_wfi	scale factor for the darkfield calculation for the WFI imager, (Precision: N/A) , (Accuracy: N/A) , (Default Type: FIXED, Value: 64.0)	CAE_INVALID	NUMBER	FLOAT4	N/A	N/A	N/A	NONE	PRIVATE
1428	dark_fmt_ffi	scale factor for the darkfield calculation for the FFI imager, (Precision: N/A) , (Accuracy: N/A) , (Default Type: FIXED, Value: 64.0)	CAE_INVALID	NUMBER	FLOAT4	N/A	N/A	N/A	NONE	PRIVATE
1429	dark_fmt_fpi	scale factor for the darkfield calculation for the FPI imager, (Precision: N/A) , (Accuracy: N/A) , (Default Type: FIXED, Value: 64.0)	CAE_INVALID	NUMBER	FLOAT4	N/A	N/A	N/A	NONE	PRIVATE
1430	distortion_wfi_par_a	distortion parameter for the WFI imager, (Precision: N/A) , (Accuracy: N/A) , (Default Type: FIXED, Value: 0.0)	CAE_INVALID	NUMBER	FLOAT8	N/A	N/A	N/A	NONE	PRIVATE
1431	distortion_wfi_par_b	distortion parameter for the WFI imager, (Precision: N/A) , (Accuracy: N/A) , (Default Type: FIXED, Value: 0.0)	CAE_INVALID	NUMBER	FLOAT8	N/A	N/A	N/A	NONE	PRIVATE
1432	distortion_wfi_par_c	distortion parameter for the WFI imager, (Precision: N/A) , (Accuracy: N/A) , (Default Type: FIXED, Value: 7.9423E-05)	CAE_INVALID	NUMBER	FLOAT8	N/A	N/A	N/A	NONE	PRIVATE
1433	distortion_wfi_par_d	distortion parameter for the WFI imager, (Precision: N/A) , (Accuracy: N/A) , (Default Type: FIXED, Value: -2.6077E-05)	CAE_INVALID	NUMBER	FLOAT8	N/A	N/A	N/A	NONE	PRIVATE

	A	B	C	D	E	F	G	H	I	J
1434	distortion_wfi_par_e	distortion parameter for the WFI imager, (Precision: N/A) , (Accuracy: N/A) , (Default Type: FIXED, Value: 5.03351E-05)	CAE_INVALID	NUMBER	FLOAT8	N/A	N/A	N/A	NONE	PRIVATE
1435	distortion_ffi_par_a	distortion parameter for the FFI imager, (Precision: N/A) , (Accuracy: N/A) , (Default Type: FIXED, Value: 0.0)	CAE_INVALID	NUMBER	FLOAT8	N/A	N/A	N/A	NONE	PRIVATE
1436	distortion_ffi_par_b	distortion parameter for the FFI imager, (Precision: N/A) , (Accuracy: N/A) , (Default Type: FIXED, Value: 0.0)	CAE_INVALID	NUMBER	FLOAT8	N/A	N/A	N/A	NONE	PRIVATE
1437	distortion_ffi_par_c	distortion parameter for the FFI imager, (Precision: N/A) , (Accuracy: N/A) , (Default Type: FIXED, Value: -3.33260E-05)	CAE_INVALID	NUMBER	FLOAT8	N/A	N/A	N/A	NONE	PRIVATE
1438	distortion_ffi_par_d	distortion parameter for the FFI imager, (Precision: N/A) , (Accuracy: N/A) , (Default Type: FIXED, Value: 1.171E-04)	CAE_INVALID	NUMBER	FLOAT8	N/A	N/A	N/A	NONE	PRIVATE
1439	distortion_ffi_par_e	distortion parameter for the FFI imager, (Precision: N/A) , (Accuracy: N/A) , (Default Type: FIXED, Value: -2.2642E-04)	CAE_INVALID	NUMBER	FLOAT8	N/A	N/A	N/A	NONE	PRIVATE
1440	distortion_fpi_par_a	distortion parameter for the FPI imager, (Precision: N/A) , (Accuracy: N/A) , (Default Type: FIXED, Value: 0.0)	CAE_INVALID	NUMBER	FLOAT8	N/A	N/A	N/A	NONE	PRIVATE
1441	distortion_fpi_par_b	distortion parameter for the FPI imager, (Precision: N/A) , (Accuracy: N/A) , (Default Type: FIXED, Value: 0.0)	CAE_INVALID	NUMBER	FLOAT8	N/A	N/A	N/A	NONE	PRIVATE
1442	distortion_fpi_par_c	distortion parameter for the FPI imager, (Precision: N/A) , (Accuracy: N/A) , (Default Type: FIXED, Value: 0.0)	CAE_INVALID	NUMBER	FLOAT8	N/A	N/A	N/A	NONE	PRIVATE
1443	distortion_fpi_par_d	distortion parameter for the FPI imager, (Precision: N/A) , (Accuracy: N/A) , (Default Type: FIXED, Value: 0.0)	CAE_INVALID	NUMBER	FLOAT8	N/A	N/A	N/A	NONE	PRIVATE
1444	distortion_fpi_par_e	distortion parameter for the FPI imager, (Precision: N/A) , (Accuracy: N/A) , (Default Type: FIXED, Value: 0.0)	CAE_INVALID	NUMBER	FLOAT8	N/A	N/A	N/A	NONE	PRIVATE
1445	iteration_limit_wfi	iteration limit for distortion compensation for the WFI imager, (Precision: N/A) , (Accuracy: N/A) , (Default Type: FIXED, Value: 1.0E-04)	CAE_INVALID	NUMBER	FLOAT4	N/A	N/A	N/A	NONE	PRIVATE
1446	iteration_limit_ffi	iteration limit for distortion compensation for the FFI imager, (Precision: N/A) , (Accuracy: N/A) , (Default Type: FIXED, Value: 1.0E-04)	CAE_INVALID	NUMBER	FLOAT4	N/A	N/A	N/A	NONE	PRIVATE
1447	iteration_limit_fpi	iteration limit for distortion compensation for the FPI imager, (Precision: N/A) , (Accuracy: N/A) , (Default Type: FIXED, Value: 1.0E-04)	CAE_INVALID	NUMBER	FLOAT4	N/A	N/A	N/A	NONE	PRIVATE
1448	focal_parameters_focal_length_m1	focal length of mirror M1, (Precision: N/A) , (Accuracy: N/A) , (Default Type: FIXED, Value: -3200.0)	CAE_INVALID	NUMBER	FLOAT4	millimeters	N/A	N/A	NONE	PRIVATE

	A	B	C	D	E	F	G	H	I	J
1449	focal_parameters_focal_length_m2	focal length of mirror M2, (Precision: N/A) , (Accuracy: N/A) , (Default Type: FIXED, Value: -477.065)	CAE_INVALID	NUMBER	FLOAT4	millimeters	N/A	N/A	NONE	PRIVATE
1450	focal_parameters_dist_mirror_nom	nominal distance of secondary mirror, (Precision: N/A) , (Accuracy: N/A) , (Default Type: FIXED, Value: -2754.0)	CAE_INVALID	NUMBER	FLOAT4	millimeters	N/A	N/A	NONE	PRIVATE
1451	focal_parameters_focal_length_oc	focal length of FPI ocular, (Precision: N/A) , (Accuracy: N/A) , (Default Type: FIXED, Value: 796.9)	CAE_INVALID	NUMBER	FLOAT4	millimeters	N/A	N/A	NONE	PRIVATE
1452	focal_parameters_focal_length_pl	focal length of FPI planar, (Precision: N/A) , (Accuracy: N/A) , (Default Type: FIXED, Value: 84.8)	CAE_INVALID	NUMBER	FLOAT4	millimeters	N/A	N/A	NONE	PRIVATE
1453	focal_parameters_focus_pos_nom	nominal FPI position, (Precision: N/A) , (Accuracy: N/A) , (Default Type: FIXED, Value: 0.0)	CAE_INVALID	NUMBER	FLOAT4	millimeters	N/A	N/A	NONE	PRIVATE
1454	focus_encode_scale	number of focus encoder counts per rotation, (Precision: N/A) , (Accuracy: N/A) , (Default Type: FIXED, Value: 4096)	CAE_INVALID	NUMBER	INT4	N/A	N/A	N/A	NONE	PRIVATE
1455	focus_spindle_lead	focus movement on one spindle turn in mm, (Precision: N/A) , (Accuracy: N/A) , (Default Type: FIXED, Value: 1.0)	CAE_INVALID	NUMBER	FLOAT4	N/A	N/A	N/A	NONE	PRIVATE
1456	focus_lower_limit	the lower limit of the focus spindle (absolute), (Precision: N/A) , (Accuracy: N/A) , (Default Type: FIXED, Value: -300.0)	CAE_INVALID	NUMBER	FLOAT4	millimeters	N/A	N/A	NONE	PRIVATE
1457	focus_upper_limit	the upper limit of the focus spindle (absolute), (Precision: N/A) , (Accuracy: N/A) , (Default Type: FIXED, Value: 300.0)	CAE_INVALID	NUMBER	FLOAT4	millimeters	N/A	N/A	NONE	PRIVATE
1458	gravity_ref	reference gravity for the alignment of FPI internal bending, (Precision: N/A) , (Accuracy: N/A) , (Default Type: FIXED, Value: 9.807)	CAE_INVALID	NUMBER	FLOAT4	meters per square second	N/A	N/A	NONE	PRIVATE
1459	ref_temp_t2	reference temperature for the temperature sensor T2, (Precision: N/A) , (Accuracy: N/A) , (Default Type: FIXED, Value: 293.0)	CAE_INVALID	NUMBER	FLOAT4	kelvins	N/A	N/A	NONE	PRIVATE
1460	ref_temp_t3	reference temperature for the temperature sensor T3, (Precision: N/A) , (Accuracy: N/A) , (Default Type: FIXED, Value: 293.0)	CAE_INVALID	NUMBER	FLOAT4	kelvins	N/A	N/A	NONE	PRIVATE
1461	ref_temp_t6	reference temperature for the temperature sensor T6, (Precision: N/A) , (Accuracy: N/A) , (Default Type: FIXED, Value: 293.0)	CAE_INVALID	NUMBER	FLOAT4	kelvins	N/A	N/A	NONE	PRIVATE
1462	temp_coeff_0	temperature coefficient a, (Precision: N/A) , (Accuracy: N/A) , (Default Type: FIXED, Value: 0.2)	CAE_INVALID	NUMBER	FLOAT4	N/A	N/A	N/A	NONE	PRIVATE
1463	temp_coeff_1	temperature coefficient b, (Precision: N/A) , (Accuracy: N/A) , (Default Type: FIXED, Value: 0.5)	CAE_INVALID	NUMBER	FLOAT4	N/A	N/A	N/A	NONE	PRIVATE
1464	temp_coeff_2	temperature coefficient c, (Precision: N/A) , (Accuracy: N/A) , (Default Type: FIXED, Value: 2.0)	CAE_INVALID	NUMBER	FLOAT4	N/A	N/A	N/A	NONE	PRIVATE

	A	B	C	D	E	F	G	H	I	J
1465	pointing_coeff_0	pointing coefficient k1, (Precision: N/A) , (Accuracy: N/A) , (Default Type: FIXED, Value: 0.0)	CAE_INVALID	NUMBER	FLOAT4	N/A	N/A	N/A	NONE	PRIVATE
1466	pointing_coeff_1	pointing coefficient k2, (Precision: N/A) , (Accuracy: N/A) , (Default Type: FIXED, Value: 0.0)	CAE_INVALID	NUMBER	FLOAT4	N/A	N/A	N/A	NONE	PRIVATE
1467	pointing_coeff_2	pointing coefficient k3, (Precision: N/A) , (Accuracy: N/A) , (Default Type: FIXED, Value: 0.0)	CAE_INVALID	NUMBER	FLOAT4	N/A	N/A	N/A	NONE	PRIVATE
1468	align_wfi_mf_q0	alignment of WFI w.r.t. WFIMF, (Precision: 1E-15) , (Accuracy: N/A) , (Default Type: FIXED, Value: 0.0)	CAE_INVALID	NUMBER	FLOAT8	N/A	-1	1	NONE	PRIVATE
1469	align_wfi_mf_q1	alignment of WFI w.r.t. WFIMF, (Precision: 1E-15) , (Accuracy: N/A) , (Default Type: FIXED, Value: 0.0)	CAE_INVALID	NUMBER	FLOAT8	N/A	-1	1	NONE	PRIVATE
1470	align_wfi_mf_q2	alignment of WFI w.r.t. WFIMF, (Precision: 1E-15) , (Accuracy: N/A) , (Default Type: FIXED, Value: 0.0)	CAE_INVALID	NUMBER	FLOAT8	N/A	-1	1	NONE	PRIVATE
1471	align_wfi_mf_q3	alignment of WFI w.r.t. WFIMF, (Precision: 1E-15) , (Accuracy: N/A) , (Default Type: FIXED, Value: 1.0)	CAE_INVALID	NUMBER	FLOAT8	N/A	-1	1	NONE	PRIVATE
1472	align_ffi_mf_q0	alignment of FFI w.r.t. FFIMF, (Precision: 1E-15) , (Accuracy: N/A) , (Default Type: FIXED, Value: 0.0)	CAE_INVALID	NUMBER	FLOAT8	N/A	-1	1	NONE	PRIVATE
1473	align_ffi_mf_q1	alignment of FFI w.r.t. FFIMF, (Precision: 1E-15) , (Accuracy: N/A) , (Default Type: FIXED, Value: 0.0)	CAE_INVALID	NUMBER	FLOAT8	N/A	-1	1	NONE	PRIVATE
1474	align_ffi_mf_q2	alignment of FFI w.r.t. FFIMF, (Precision: 1E-15) , (Accuracy: N/A) , (Default Type: FIXED, Value: 0.0)	CAE_INVALID	NUMBER	FLOAT8	N/A	-1	1	NONE	PRIVATE
1475	align_ffi_mf_q3	alignment of FFI w.r.t. FFIMF, (Precision: 1E-15) , (Accuracy: N/A) , (Default Type: FIXED, Value: 1.0)	CAE_INVALID	NUMBER	FLOAT8	N/A	-1	1	NONE	PRIVATE
1476	align_fpi_mf_q0	alignment of FPI w.r.t. FPIMF, (Precision: 1E-15) , (Accuracy: N/A) , (Default Type: FIXED, Value: 0.0)	CAE_INVALID	NUMBER	FLOAT8	N/A	-1	1	NONE	PRIVATE
1477	align_fpi_mf_q1	alignment of FPI w.r.t. FPIMF, (Precision: 1E-15) , (Accuracy: N/A) , (Default Type: FIXED, Value: 0.0)	CAE_INVALID	NUMBER	FLOAT8	N/A	-1	1	NONE	PRIVATE
1478	align_fpi_mf_q2	alignment of FPI w.r.t. FPIMF, (Precision: 1E-15) , (Accuracy: N/A) , (Default Type: FIXED, Value: 0.0)	CAE_INVALID	NUMBER	FLOAT8	N/A	-1	1	NONE	PRIVATE
1479	align_fpi_mf_q3	alignment of FPI w.r.t. FPIMF, (Precision: 1E-15) , (Accuracy: N/A) , (Default Type: FIXED, Value: 1.0)	CAE_INVALID	NUMBER	FLOAT8	N/A	-1	1	NONE	PRIVATE
1480	focal_length_wfi	focal length of the WFI camera, (Precision: N/A) , (Accuracy: N/A) , (Default Type: FIXED, Value: 135.0)	CAE_INVALID	NUMBER	FLOAT4	millimeters	N/A	N/A	NONE	PRIVATE

	A	B	C	D	E	F	G	H	I	J
1481	focal_length_ffi	focal length of the FFI camera, (Precision: N/A) , (Accuracy: N/A) , (Default Type: FIXED, Value: 710.0)	CAE_INVALID	NUMBER	FLOAT4	millimeters	N/A	N/A	NONE	PRIVATE
1482	iqc_inversion	flag if IQC quaternion should be inverted or not, (Precision: N/A) , (Accuracy: N/A) , (Default Type: FIXED, Value: 1)	CAE_INVALID	NUMBER	INT4	N/A	N/A	N/A	NONE	PRIVATE
1483	img_index_wfi	specific imager index derived from pointing stability requirements for the WFI imager, (Precision: N/A) , (Accuracy: N/A) , (Default Type: FIXED, Value: 0.07)	CAE_INVALID	NUMBER	FLOAT4	N/A	N/A	N/A	NONE	PRIVATE
1484	img_index_ffi	specific imager index derived from pointing stability requirements for the FFI imager, (Precision: N/A) , (Accuracy: N/A) , (Default Type: FIXED, Value: 0.25)	CAE_INVALID	NUMBER	FLOAT4	N/A	N/A	N/A	NONE	PRIVATE
1485	img_index_fpi	specific imager index derived from pointing stability requirements for the FPI imager, (Precision: N/A) , (Accuracy: N/A) , (Default Type: FIXED, Value: 1.0)	CAE_INVALID	NUMBER	FLOAT4	N/A	N/A	N/A	NONE	PRIVATE
1486	cent_qlt_limit	limit of centroid quality index (0.0, ..., 1.0), (Precision: N/A) , (Accuracy: N/A) , (Default Type: FIXED, Value: 0.005)	CAE_INVALID	NUMBER	FLOAT8	N/A	N/A	N/A	NONE	PRIVATE
1487	limb_qlt_limit	limit of limb quality index (0.0, ..., 1.0), (Precision: N/A) , (Accuracy: N/A) , (Default Type: FIXED, Value: 0.01)	CAE_INVALID	NUMBER	FLOAT8	N/A	N/A	N/A	NONE	PRIVATE
1488	cent_afq_limit	limit of centroid quality index (0.0, ..., 1.0) at the start of the auto-focus operation, (Precision: N/A) , (Accuracy: N/A) , (Default Type: FIXED, Value: 0.01)	CAE_INVALID	NUMBER	FLOAT8	N/A	N/A	N/A	NONE	PRIVATE
1489	af_start_step	the length of the first step for the auto-focus loop, (Precision: N/A) , (Accuracy: N/A) , (Default Type: FIXED, Value: 1.0)	CAE_INVALID	NUMBER	FLOAT4	N/A	N/A	N/A	NONE	PRIVATE
1490	af_centr_avg_limit	the number of centroid iterations for the autofocus, (Precision: N/A) , (Accuracy: N/A) , (Default Type: FIXED, Value: 3)	CAE_INVALID	NUMBER	UINT4	N/A	N/A	N/A	NONE	PRIVATE
1491	delta_exp_start	tolerance area for the exposure start time, (Precision: N/A) , (Accuracy: N/A) , (Default Type: FIXED, Value: 10)	CAE_INVALID	NUMBER	UINT4	N/A	N/A	N/A	NONE	PRIVATE
1492	delta_can_time	tolerance area for CANbus command timestamps (pixel_xx, filter, focus, reticle), (Precision: N/A) , (Accuracy: N/A) , (Default Type: FIXED, Value: 10)	CAE_INVALID	NUMBER	UINT4	N/A	N/A	N/A	NONE	PRIVATE
1493	can_version	CANbus ICC version, (Precision: N/A) , (Accuracy: N/A) , (Default Type: FIXED, Value: 4114)	CAE_INVALID	NUMBER	INT4	N/A	N/A	N/A	NONE	PRIVATE
1494	max_tsc_data_gap	the maximum time between the exposure start/end and the previous/past entry in the attitude table and the maximal gap between two entries in the attitude table, (Precision: N/A) , (Accuracy: N/A) , (Default Type: FIXED, Value: 40)	CAE_INVALID	NUMBER	UINT4	milliseconds	N/A	N/A	NONE	PRIVATE

	A	B	C	D	E	F	G	H	I	J
1495	transform_mode_wfi	the image transformation mode for the WFI camera, (Precision: N/A) , (Accuracy: N/A) , (Default Type: FIXED, Value: 2)	CAE_INVALID	NUMBER	INT4	N/A	N/A	N/A	NONE	PRIVATE
1496	transform_mode_ffi	the image transformation mode for the FFI camera, (Precision: N/A) , (Accuracy: N/A) , (Default Type: FIXED, Value: 2)	CAE_INVALID	NUMBER	INT4	N/A	N/A	N/A	NONE	PRIVATE
1497	transform_mode_fpi	the image transformation mode for the FPI camera, (Precision: N/A) , (Accuracy: N/A) , (Default Type: FIXED, Value: 4)	CAE_INVALID	NUMBER	INT4	N/A	N/A	N/A	NONE	PRIVATE
1498	parallel_limit_14g1	the time limit for the switch of sequential/parallel timing for PF 14 PG 1x1, (Precision: N/A) , (Accuracy: N/A) , (Default Type: FIXED, Value: 600.0)	CAE_INVALID	NUMBER	FLOAT4	milliseconds	N/A	N/A	NONE	PRIVATE
1499	parallel_limit_14g2	the time limit for the switch of sequential/parallel timing for PF 14 PG 2x2, (Precision: N/A) , (Accuracy: N/A) , (Default Type: FIXED, Value: 300.0)	CAE_INVALID	NUMBER	FLOAT4	milliseconds	N/A	N/A	NONE	PRIVATE
1500	parallel_limit_14g4	the time limit for the switch of sequential/parallel timing for PF 14 PG 4x4, (Precision: N/A) , (Accuracy: N/A) , (Default Type: FIXED, Value: 200.0)	CAE_INVALID	NUMBER	FLOAT4	milliseconds	N/A	N/A	NONE	PRIVATE
1501	parallel_limit_08g1	the time limit for the switch of sequential/parallel timing for PF 8 PG 1x1, (Precision: N/A) , (Accuracy: N/A) , (Default Type: FIXED, Value: 300.0)	CAE_INVALID	NUMBER	FLOAT4	milliseconds	N/A	N/A	NONE	PRIVATE
1502	parallel_limit_08g2	the time limit for the switch of sequential/parallel timing for PF 8 PG 2x2, (Precision: N/A) , (Accuracy: N/A) , (Default Type: FIXED, Value: 150.0)	CAE_INVALID	NUMBER	FLOAT4	milliseconds	N/A	N/A	NONE	PRIVATE
1503	parallel_limit_08g4	the time limit for the switch of sequential/parallel timing for PF 8 PG 4x4, (Precision: N/A) , (Accuracy: N/A) , (Default Type: FIXED, Value: 100.0)	CAE_INVALID	NUMBER	FLOAT4	milliseconds	N/A	N/A	NONE	PRIVATE
1504	parallel_off_14g1	the time offset subtraction from the exposure time to set in parallel mode for PF 14 PG 1x1, (Precision: N/A) , (Accuracy: N/A) , (Default Type: FIXED, Value: 559.4)	CAE_INVALID	NUMBER	FLOAT4	milliseconds	N/A	N/A	NONE	PRIVATE
1505	parallel_off_14g2	the time offset subtraction from the exposure time to set in parallel mode for PF 14 PG 2x2, (Precision: N/A) , (Accuracy: N/A) , (Default Type: FIXED, Value: 284.4)	CAE_INVALID	NUMBER	FLOAT4	milliseconds	N/A	N/A	NONE	PRIVATE
1506	parallel_off_14g4	the time offset subtraction from the exposure time to set in parallel mode for PF 14 PG 4x4, (Precision: N/A) , (Accuracy: N/A) , (Default Type: FIXED, Value: 147.4)	CAE_INVALID	NUMBER	FLOAT4	milliseconds	N/A	N/A	NONE	PRIVATE
1507	parallel_off_08g1	the time offset subtraction from the exposure time to set in parallel mode for PF 8 PG 1x1, (Precision: N/A) , (Accuracy: N/A) , (Default Type: FIXED, Value: 234.0)	CAE_INVALID	NUMBER	FLOAT4	milliseconds	N/A	N/A	NONE	PRIVATE

	A	B	C	D	E	F	G	H	I	J
1508	parallel_off_08g2	the time offset subtraction from the exposure time to set in parallel mode for PF 8 PG 2x2, (Precision: N/A) , (Accuracy: N/A) , (Default Type: FIXED, Value: 122.0)	CAE_INVALID	NUMBER	FLOAT4	milliseconds	N/A	N/A	NONE	PRIVATE
1509	parallel_off_08g4	the time offset subtraction from the exposure time to set in parallel mode for PF 8 PG 4x4, (Precision: N/A) , (Accuracy: N/A) , (Default Type: FIXED, Value: 67.0)	CAE_INVALID	NUMBER	FLOAT4	milliseconds	N/A	N/A	NONE	PRIVATE
1510	transfer_time_14g1	the image transfer and readout time for 1x1 binning and PF 14, (Precision: N/A) , (Accuracy: N/A) , (Default Type: FIXED, Value: 550)	CAE_INVALID	NUMBER	INT4	milliseconds	N/A	N/A	NONE	PRIVATE
1511	transfer_time_14g2	the image transfer and readout time for 2x2 binning and PF 14, (Precision: N/A) , (Accuracy: N/A) , (Default Type: FIXED, Value: 280)	CAE_INVALID	NUMBER	INT4	milliseconds	N/A	N/A	NONE	PRIVATE
1512	transfer_time_14g4	the image transfer and readout time for 4x4 binning and PF 14, (Precision: N/A) , (Accuracy: N/A) , (Default Type: FIXED, Value: 150)	CAE_INVALID	NUMBER	INT4	milliseconds	N/A	N/A	NONE	PRIVATE
1513	transfer_time_08g1	the image transfer and readout time for 1x1 binning and PF 8, (Precision: N/A) , (Accuracy: N/A) , (Default Type: FIXED, Value: 220)	CAE_INVALID	NUMBER	INT4	milliseconds	N/A	N/A	NONE	PRIVATE
1514	transfer_time_08g2	the image transfer and readout time for 2x2 binning and PF 8, (Precision: N/A) , (Accuracy: N/A) , (Default Type: FIXED, Value: 125)	CAE_INVALID	NUMBER	INT4	milliseconds	N/A	N/A	NONE	PRIVATE
1515	transfer_time_08g4	the image transfer and readout time for 4x4 binning and PF 8, (Precision: N/A) , (Accuracy: N/A) , (Default Type: FIXED, Value: 70)	CAE_INVALID	NUMBER	INT4	milliseconds	N/A	N/A	NONE	PRIVATE
1516	transfer_time_delta	the image transfer and readout time delta for all timings, (Precision: N/A) , (Accuracy: N/A) , (Default Type: FIXED, Value: 20)	CAE_INVALID	NUMBER	INT4	milliseconds	N/A	N/A	NONE	PRIVATE
1517	filter_pos_df_aqu	the filter position when acquiring a darkfield image (used for flatfield acquisition), (Precision: N/A) , (Accuracy: N/A) , (Default Type: FIXED, Value: 1)	CAE_INVALID	NUMBER	INT4	N/A	N/A	N/A	NONE	PRIVATE
1518	flatfield_div_wfi	the division value for the flatfield correction for the WFI camera processor, (Precision: N/A) , (Accuracy: N/A) , (Default Type: FIXED, Value: 16383)	CAE_INVALID	NUMBER	INT4	N/A	N/A	N/A	NONE	PRIVATE
1519	flatfield_div_ffi	the division value for the flatfield correction for the FFI camera processor, (Precision: N/A) , (Accuracy: N/A) , (Default Type: FIXED, Value: 16383)	CAE_INVALID	NUMBER	INT4	N/A	N/A	N/A	NONE	PRIVATE

	A	B	C	D	E	F	G	H	I	J
1520	flatfield_div_fpi	the division value for the flatfield correction for the FPI camera processor, (Precision: N/A) , (Accuracy: N/A) , (Default Type: FIXED, Value: 16383)	CAE_INVALID	NUMBER	INT4	N/A	N/A	N/A	NONE	PRIVATE
1521	darkfield_offset_wfi	darkfield calculation offset value for WFI camera, (Precision: N/A) , (Accuracy: N/A) , (Default Type: FIXED, Value: 876.0)	CAE_INVALID	NUMBER	FLOAT4	N/A	N/A	N/A	NONE	PRIVATE
1522	darkfield_offset_ffi	darkfield calculation offset value for FFI camera, (Precision: N/A) , (Accuracy: N/A) , (Default Type: FIXED, Value: 800.0)	CAE_INVALID	NUMBER	FLOAT4	N/A	N/A	N/A	NONE	PRIVATE
1523	darkfield_offset_fpi	darkfield calculation offset value for FPI camera, (Precision: N/A) , (Accuracy: N/A) , (Default Type: FIXED, Value: 410.0)	CAE_INVALID	NUMBER	FLOAT4	N/A	N/A	N/A	NONE	PRIVATE
1524	timeout_tap_evt	reaction time of Tap_calc on events, (mode transition or LOSlimit/Tweak exception), (Precision: N/A) , (Accuracy: N/A) , (Default Type: FIXED, Value: 100)	CAE_INVALID	NUMBER	INT4	milliseconds	N/A	N/A	NONE	PRIVATE
1525	timeout_rof_evt	reaction time of Rof_calc on events, (transition to positioning mode), (Precision: N/A) , (Accuracy: N/A) , (Default Type: FIXED, Value: 100)	CAE_INVALID	NUMBER	INT4	milliseconds	N/A	N/A	NONE	PRIVATE
1526	timeout_ccp_ans	timeout for CP_ANSWER from camera processor, (Precision: N/A) , (Accuracy: N/A) , (Default Type: FIXED, Value: 7500)	CAE_INVALID	NUMBER	INT4	milliseconds	N/A	N/A	NONE	PRIVATE
1527	timeout_tsc_res	timeout for TASCU response, (Precision: N/A) , (Accuracy: N/A) , (Default Type: FIXED, Value: 30000)	CAE_INVALID	NUMBER	INT4	milliseconds	N/A	N/A	NONE	PRIVATE
1528	timeout_vid_ctl	timeout for Video Handler Control (Darkfield Acquisition), (Precision: N/A) , (Accuracy: N/A) , (Default Type: FIXED, Value: 5)	CAE_INVALID	NUMBER	INT4	seconds	N/A	N/A	NONE	PRIVATE
1529	timeout_seq_hnd	timeout for Sequence Handler (AOI BS request), (Precision: N/A) , (Accuracy: N/A) , (Default Type: FIXED, Value: 1)	CAE_INVALID	NUMBER	INT4	seconds	N/A	N/A	NONE	PRIVATE
1530	timeout_can_ans	timeout for CANbus answers, (Precision: N/A) , (Accuracy: N/A) , (Default Type: FIXED, Value: 10)	CAE_INVALID	NUMBER	INT4	seconds	N/A	N/A	NONE	PRIVATE
1531	timeout_filter_ans	timeout for filter wheel CANbus answers, (Precision: N/A) , (Accuracy: N/A) , (Default Type: FIXED, Value: 15)	CAE_INVALID	NUMBER	INT4	seconds	N/A	N/A	NONE	PRIVATE
1532	**Command**	**Description**	**NeedDate**	**Visibility**	**CmdVers**	**DestID**	**CmdID**			
1533	ta_trc.trc_config_save	saves the currently set configuration parameters to the configuration file	CAE_INVALID	PUBLIC	1	0	61440			
1534	**Command**	**Description**	**NeedDate**	**Visibility**	**CmdVers**	**DestID**	**CmdID**			
1535	ta_trc.trc_config_load	loads the configuration parameters from the configuration file	CAE_INVALID	PUBLIC	1	0	61441			
1536	**Command**	**Description**	**NeedDate**	**Visibility**	**CmdVers**	**DestID**	**CmdID**			
1537	ta_trc.trc_config_get	returns the currently set configuration parameters in a trc_config reply message	CAE_INVALID	PUBLIC	1	0	61442			

	A	B	C	D	E	F	G	H	I	J
1538	**Command**	**Description**	**NeedDate**	**Visibility**	**CmdVers**	**DestID**	**CmdID**			
1539	ta_trc.send_packet	Used to send pass through data packets to the TA	CAE_INVALID	PUBLIC	1	0	0			
1540	**Argument**	**Arg_Description**	**NeedDate**	**Form**	**Representation**	**units**	**LoLimit**	**HiLimit**	**ValueType**	**Visibility**
1541	packet	The data packet to send encoded as an ASCII hexadecimal string	CAE_INVALID	NUMBER	STRING	N/A			NONE	PUBLIC
1542	**Command**	**Description**	**NeedDate**	**Visibility**	**CmdVers**	**DestID**	**CmdID**			
1543	ta_trc.set_archive_nsample	Set the archive nsample for a data group	CAE_INVALID	PUBLIC	1	0	99999			
1544	**Argument**	**Arg_Description**	**NeedDate**	**Form**	**Representation**	**units**	**LoLimit**	**HiLimit**	**ValueType**	**Visibility**
1545	datagroup	Data group name, (Precision: N/A) , (Accuracy: N/A) , [ENUM: (1: trc_process_info) (2: trc_watchdog) (3: trc_status_table) (4: trc_main_aoi_table) (5: trc_centroid_table) (6: trc_limb_table) (7: trc_distribution_table) (8: trc_boresight_table) (9: trc_tracking_table) (10: trc_rof_table) (11: trc_nodding_table) (12: trc_tascu_comm_table) (13: wfi_img_hist_table) (14: ffi_img_hist_table) (15: fpi_img_hist_table) (16: trc_temperature_table) (17: trc_alignment_table) (18: wfi_control_table) (19: wfi_aoi_bs_table) (20: ffi_control_table) (21: ffi_aoi_bs_table) (22: fpi_control_table) (23: fpi_aoi_bs_table)]	CAE_INVALID	ENUM	STRING	N/A	1	23	NONE	PUBLIC
1546	nsample	archive n sample value, (Precision: N/A) , (Accuracy: N/A) , (Default Type: FIXED, Value: 1)	CAE_INVALID	NUMBER	UINT4	N/A	0	4294967295	NONE	PUBLIC
1547	**ta_tsc** **List of TA Servo Control Unit (TASCU) commands**									
1548	**Command**	**Description**	**NeedDate**	**Visibility**	**CmdVers**	**DestID**	**CmdID**			
1549	ta_tsc.tsc_mode_shutdown	transition the servo system to SHUTDOWN mode	CAE_INVALID	PUBLIC	1	0	3001			
1550	**Command**	**Description**	**NeedDate**	**Visibility**	**CmdVers**	**DestID**	**CmdID**			
1551	ta_tsc.tsc_mode_caged	transition the servo system to CAGED mode	CAE_INVALID	PUBLIC	1	0	3002			
1552	**Command**	**Description**	**NeedDate**	**Visibility**	**CmdVers**	**DestID**	**CmdID**			
1553	ta_tsc.tsc_mode_standby	transition the servo system to the STANDBY mode	CAE_INVALID	PUBLIC	1	0	3003			
1554	**Command**	**Description**	**NeedDate**	**Visibility**	**CmdVers**	**DestID**	**CmdID**			
1555	ta_tsc.tsc_mode_stab_local	transition the servo system to STAB_LOCAL mode	CAE_INVALID	PUBLIC	1	0	3004			
1556	**Command**	**Description**	**NeedDate**	**Visibility**	**CmdVers**	**DestID**	**CmdID**			
1557	ta_tsc.tsc_mode_stab_inertial	transition the servo system to STAB_INERTIAL mode	CAE_INVALID	PUBLIC	1	0	3005			
1558	**Argument**	**Arg_Description**	**NeedDate**	**Form**	**Representation**	**units**	**LoLimit**	**HiLimit**	**ValueType**	**Visibility**

	A	B	C	D	E	F	G	H	I	J
1559	stab_des_mode	The mode used for inertially stabilized control of the telescope. There are four modes: only gyroscopes (FBC_OFF), gyros corrected by quasi-static FBC (FBC_QS), pointing compensated by dynamic FBC on SCS (FBC_DY), and gyros corrected by quasi-static FBC and pointing compensated by dynamic FBC on SCS (FBC_ON), (Precision: N/A) , (Accuracy: N/A) , [ENUM: (1: FBC_OFF) (2: FBC_QS) (3: FBC_DY) (4: FBC_ON)]	CAE_INVALID	ENUM	UINT1	N/A	1	4	NONE	PUBLIC
1560	**Command**	**Description**	**NeedDate**	**Visibility**	**CmdVers**	**DestID**	**CmdID**			
1561	ta_tsc.tsc_mode_sw_interlock	transition the servo system to CAGED mode quickly	CAE_INVALID	PUBLIC	1	0	3006			
1562	**Command**	**Description**	**NeedDate**	**Visibility**	**CmdVers**	**DestID**	**CmdID**			
1563	ta_tsc.tsc_auto_bal_control	initiates automated fine balancing of the TA	CAE_INVALID	PUBLIC	1	0	3007			
1564	**Command**	**Description**	**NeedDate**	**Visibility**	**CmdVers**	**DestID**	**CmdID**			
1565	ta_tsc.tsc_vis_adjust	control the operation point of the Vibration Isolation System	CAE_INVALID	PUBLIC	1	0	8001			
1566	**Command**	**Description**	**NeedDate**	**Visibility**	**CmdVers**	**DestID**	**CmdID**			
1567	ta_tsc.tsc_vis_auto_control	enable automatic adjustment of the VIS operation point	CAE_INVALID	PUBLIC	1	0	8002			
1568	**Argument**	**Arg_Description**	**NeedDate**	**Form**	**Representation**	**units**	**LoLimit**	**HiLimit**	**ValueType**	**Visibility**
1569	vis_des_auto_control	Specifies whether to start (AUTO) or stop (OFF) automated VIS adjustment, (Precision: N/A) , (Accuracy: N/A) , [ENUM: (1: OFF) (2: AUTO)]	CAE_INVALID	ENUM	UINT1	N/A	1	2	NONE	PUBLIC
1570	**Command**	**Description**	**NeedDate**	**Visibility**	**CmdVers**	**DestID**	**CmdID**			
1571	ta_tsc.tsc_bd_param_set	set maximum rate for balance drive motions	CAE_INVALID	PUBLIC	1	0	11001			
1572	**Argument**	**Arg_Description**	**NeedDate**	**Form**	**Representation**	**units**	**LoLimit**	**HiLimit**	**ValueType**	**Visibility**
1573	bd_des_rate_max_u	Maximum allowable rate of change for the moment along the U-axis, (Precision: 0.001) , (Accuracy: N/A)	CAE_INVALID	NUMBER	FLOAT4	millimeters per second	0.01	2	SET	PUBLIC
1574	bd_des_rate_max_v	Maximum allowable rate of change for the moment along the V-axis, (Precision: 0.001) , (Accuracy: N/A)	CAE_INVALID	NUMBER	FLOAT4	millimeters per second	0.01	2	SET	PUBLIC
1575	bd_des_rate_max_w	Maximum allowable rate of change for the moment along the W-axis, (Precision: 0.001) , (Accuracy: N/A)	CAE_INVALID	NUMBER	FLOAT4	millimeters per second	0.01	2	SET	PUBLIC
1576	**Command**	**Description**	**NeedDate**	**Visibility**	**CmdVers**	**DestID**	**CmdID**			
1577	ta_tsc.tsc_bd_slew	move the balance drives along their axis at a given rate	CAE_INVALID	PUBLIC	1	0	11002			
1578	**Argument**	**Arg_Description**	**NeedDate**	**Form**	**Representation**	**units**	**LoLimit**	**HiLimit**	**ValueType**	**Visibility**

	A	B	C	D	E	F	G	H	I	J
1579	bd_des_rate_input	Source of rate input values to move the balance drives, where the source may either be the TSC analog input board (ANALOG) or a command parameter from the MCS (CMD_PARAM), (Precision: N/A) , (Accuracy: N/A) , (Default Type: FIXED, Value: 2) , [ENUM: (1: ANALOG) (2: CMD_PARAM)]	CAE_INVALID	ENUM	UINT1	N/A	1	2	NONE	PUBLIC
1580	bd_des_rate_slew_u	Motion rate along the balance drive U-axis, (Precision: 0.001) , (Accuracy: N/A)	CAE_INVALID	NUMBER	FLOAT4	millimeters per second	-2	2	SET	PUBLIC
1581	bd_des_rate_slew_v	Motion rate along the balance drive V-axis, (Precision: 0.001) , (Accuracy: N/A)	CAE_INVALID	NUMBER	FLOAT4	millimeters per second	-2	2	SET	PUBLIC
1582	bd_des_rate_slew_w	Motion rate along the balance drive W-axis, (Precision: 0.001) , (Accuracy: N/A)	CAE_INVALID	NUMBER	FLOAT4	millimeters per second	-2	2	SET	PUBLIC
1583	**Command**	**Description**	**NeedDate**	**Visibility**	**CmdVers**	**DestID**	**CmdID**			
1584	ta_tsc.tsc_bd_pos_abs	position the balance drives to an absolute position	CAE_INVALID	PUBLIC	1	0	11003			
1585	**Argument**	**Arg_Description**	**NeedDate**	**Form**	**Representation**	**units**	**LoLimit**	**HiLimit**	**ValueType**	**Visibility**
1586	bd_des_pos_abs_u	Absolute position along balance drive U-axis, (Precision: 0.01) , (Accuracy: N/A)	CAE_INVALID	NUMBER	FLOAT4	millimeters	1702	2232	SET	PUBLIC
1587	bd_des_pos_abs_v	Absolute position along balance drive V-axis, (Precision: 0.01) , (Accuracy: N/A)	CAE_INVALID	NUMBER	FLOAT4	millimeters	-257	273	SET	PUBLIC
1588	bd_des_pos_abs_w	Absolute position along balance drive W-axis, (Precision: 0.01) , (Accuracy: N/A)	CAE_INVALID	NUMBER	FLOAT4	millimeters	864	1394	SET	PUBLIC
1589	**Command**	**Description**	**NeedDate**	**Visibility**	**CmdVers**	**DestID**	**CmdID**			
1590	ta_tsc.tsc_bd_pos_rel	move the balance drives from their current position by a relative displacement	CAE_INVALID	PUBLIC	1	0	11004			
1591	**Argument**	**Arg_Description**	**NeedDate**	**Form**	**Representation**	**units**	**LoLimit**	**HiLimit**	**ValueType**	**Visibility**
1592	bd_des_pos_rel_u	Relative position along balance drive U-axis, (Precision: 0.01) , (Accuracy: N/A)	CAE_INVALID	NUMBER	FLOAT4	millimeters	-530	530	SET	PUBLIC
1593	bd_des_pos_rel_v	Relative position along balance drive V-axis, (Precision: 0.01) , (Accuracy: N/A)	CAE_INVALID	NUMBER	FLOAT4	millimeters	-530	530	SET	PUBLIC
1594	bd_des_pos_rel_w	Relative position along balance drive W-axis, (Precision: 0.01) , (Accuracy: N/A)	CAE_INVALID	NUMBER	FLOAT4	millimeters	-530	530	SET	PUBLIC
1595	**Command**	**Description**	**NeedDate**	**Visibility**	**CmdVers**	**DestID**	**CmdID**			
1596	ta_tsc.tsc_bd_stop	stop the motion of the balance drives	CAE_INVALID	PUBLIC	1	0	11005			
1597	**Command**	**Description**	**NeedDate**	**Visibility**	**CmdVers**	**DestID**	**CmdID**			
1598	ta_tsc.tsc_cd_param_set	set maximum rate for coarse drive motions	CAE_INVALID	PUBLIC	1	0	9001			
1599	**Argument**	**Arg_Description**	**NeedDate**	**Form**	**Representation**	**units**	**LoLimit**	**HiLimit**	**ValueType**	**Visibility**
1600	cd_des_rate_max	Maximum angular rate for coarse drive motions, with the maximum value equal to 0.07 if the fine drive is inertially stabilized, and equal to 0.01 if the fine drive brakes are closed or locally stabilized, (Precision: 2E-5) , (Accuracy: N/A)	CAE_INVALID	NUMBER	FLOAT4	radians per second	0.0002	0.07	SET	PUBLIC
1601	**Command**	**Description**	**NeedDate**	**Visibility**	**CmdVers**	**DestID**	**CmdID**			
1602	ta_tsc.tsc_cd_slew	move the coarse drive at a given rate with regard to the outer cradle	CAE_INVALID	PUBLIC	1	0	9002			

	A	B	C	D	E	F	G	H	I	J
1603	**Argument**	**Arg_Description**	**NeedDate**	**Form**	**Representation**	**units**	**LoLimit**	**HiLimit**	**ValueType**	**Visibility**
1604	cd_des_rate_input	Source of rate input values to move the coarse drive, where the source may either be the TSC analog input board (ANALOG) or a command parameter from the MCS or DCC (CMD_PARAM), (Precision: N/A) , (Accuracy: N/A) , [ENUM: (1: ANALOG) (2: CMD_PARAM)]	CAE_INVALID	ENUM	UINT1	N/A	1	2	NONE	PUBLIC
1605	cd_des_rate_slew	Angular rate for coarse drive slewing motions, with the range equal to -0.07..0.07 if the fine drive is inertially stabilized, and equal to -0.01..0.01 if the fine drive brakes are closed or locally stabilized, (Precision: 2E-5) , (Accuracy: N/A)	CAE_INVALID	NUMBER	FLOAT4	radians per second	-0.07	0.07	SET	PUBLIC
1606	**Command**	**Description**	**NeedDate**	**Visibility**	**CmdVers**	**DestID**	**CmdID**			
1607	ta_tsc.tsc_cd_pos_abs	position the coarse drive to an absolute position	CAE_INVALID	PUBLIC	1	0	9003			
1608	**Argument**	**Arg_Description**	**NeedDate**	**Form**	**Representation**	**units**	**LoLimit**	**HiLimit**	**ValueType**	**Visibility**
1609	cd_des_pos_abs	Absolute coarse drive position with regard to the outer cradle, with the range equal to 0.288..1.196 if the maintenance switch is disabled and equal to 0.0..3.142 if the maintenance switch is enabled, (Precision: 5E-6) , (Accuracy: N/A)	CAE_INVALID	NUMBER	FLOAT4	radians	0	3.142	SET	PUBLIC
1610	**Command**	**Description**	**NeedDate**	**Visibility**	**CmdVers**	**DestID**	**CmdID**			
1611	ta_tsc.tsc_cd_pos_rel	move the coarse drive from its current position by a relative displacement	CAE_INVALID	PUBLIC	1	0	9004			
1612	**Argument**	**Arg_Description**	**NeedDate**	**Form**	**Representation**	**units**	**LoLimit**	**HiLimit**	**ValueType**	**Visibility**
1613	cd_des_pos_rel	Relative coarse drive position with regard to the outer cradle, with the range equal to -0.908..0.908 if the maintenance switch is disabled and equal to -3.142..3.142 if the maintenance switch is enabled, (Precision: 5E-6) , (Accuracy: N/A)	CAE_INVALID	NUMBER	FLOAT4	radians	-3.142	3.142	SET	PUBLIC
1614	**Command**	**Description**	**NeedDate**	**Visibility**	**CmdVers**	**DestID**	**CmdID**			
1615	ta_tsc.tsc_cd_couple	link the fine drive and coarse drive together	CAE_INVALID	PUBLIC	1	0	9005			
1616	**Argument**	**Arg_Description**	**NeedDate**	**Form**	**Representation**	**units**	**LoLimit**	**HiLimit**	**ValueType**	**Visibility**

	A	B	C	D	E	F	G	H	I	J
1617	cd_des_couple_mode	Desired coupling mode for the coarse drive. There are 3 modes: OFF (no coupling), CONT (continuously follow the fine drive), and STEP (follow the fine drive by applying a relative coarse drive position step), (Precision: N/A) , (Accuracy: N/A) , [ENUM: (1: OFF) (2: CONT) (3: STEP)]	CAE_INVALID	ENUM	UINT1	N/A	1	3	NONE	PUBLIC
1618	**Command**	**Description**	**NeedDate**	**Visibility**	**CmdVers**	**DestID**	**CmdID**			
1619	ta_tsc.tsc_cd_stop	stop the motion of the coarse drive	CAE_INVALID	PUBLIC	1	0	9006			
1620	**Command**	**Description**	**NeedDate**	**Visibility**	**CmdVers**	**DestID**	**CmdID**			
1621	ta_tsc.tsc_fd_param_set	set maximum rate and maximum accleration for fine drive motions	CAE_INVALID	PUBLIC	1	0	10001			
1622	**Argument**	**Arg_Description**	**NeedDate**	**Form**	**Representation**	**units**	**LoLimit**	**HiLimit**	**ValueType**	**Visibility**
1623	fd_des_rate_max	Maximum allowable angular rate for fine drive motions about the rotation axis for locally and inertially stabilized moves, (Precision: 1E-7) , (Accuracy: N/A)	CAE_INVALID	NUMBER	FLOAT4	radians per second	0.001	0.0175	SET	PUBLIC
1624	fd_des_acc_max	Maximum allowable angular acceleration for fine drive motions about the rotation axis for locally and inertially stabilized moves, (Precision: 1E-7) , (Accuracy: N/A)	CAE_INVALID	NUMBER	FLOAT4	radians per second-squared	0.001	0.014	SET	PUBLIC
1625	**Command**	**Description**	**NeedDate**	**Visibility**	**CmdVers**	**DestID**	**CmdID**			
1626	ta_tsc.tsc_fd_slew	move the fine drive at a given velocity in three motion axes	CAE_INVALID	PUBLIC	1	0	10002			
1627	**Argument**	**Arg_Description**	**NeedDate**	**Form**	**Representation**	**units**	**LoLimit**	**HiLimit**	**ValueType**	**Visibility**
1628	fd_des_rate_input	Source of rate input values to move the fine drive, where the source may either be the TSC analog input board (ANALOG) or a command parameter from the MCS or DCC (CMD_PARAM), (Precision: N/A) , (Accuracy: N/A) , [ENUM: (1: ANALOG) (2: CMD_PARAM)]	CAE_INVALID	ENUM	UINT1	N/A	1	2	NONE	PUBLIC
1629	fd_des_rate_slew_el	Angular rate for fine drive slewing motions around the elevation axis, (Precision: 1E-7) , (Accuracy: N/A)	CAE_INVALID	NUMBER	FLOAT4	radians per second	-0.0175	0.0175	SET	PUBLIC
1630	fd_des_rate_slew_xel	Angular rate for fine drive slewing motions around the cross elevation axis, (Precision: 1E-7) , (Accuracy: N/A)	CAE_INVALID	NUMBER	FLOAT4	radians per second	-0.0175	0.0175	SET	PUBLIC
1631	fd_des_rate_slew_los	Angular rate for fine drive slewing motions around the line of sight axis, (Precision: 1E-7) , (Accuracy: N/A)	CAE_INVALID	NUMBER	FLOAT4	radians per second	-0.0175	0.0175	SET	PUBLIC
1632	**Command**	**Description**	**NeedDate**	**Visibility**	**CmdVers**	**DestID**	**CmdID**			
1633	ta_tsc.tsc_fd_pos_abs	position the fine drive to an absolute attitude	CAE_INVALID	PUBLIC	1	0	10003			
1634	**Argument**	**Arg_Description**	**NeedDate**	**Form**	**Representation**	**units**	**LoLimit**	**HiLimit**	**ValueType**	**Visibility**

	A	B	C	D	E	F	G	H	I	J
1635	fd_des_pos_abs_quat	absolute attitude quaternion component, (Precision: 1E-8) , (Accuracy: N/A) , [Matrix size: (min: 1), (max: 1)] Desired absolute attitude quaternion for fine drive motions (meaning of quaternion depends on current TASCU mode: Local Stabilization mode = ICRF->TARF, Inertial Stabilization mode = IRF->TARF), [Quat_elem: (min: 4), (max: 4)]	CAE_INVALID	NUMBER	FLOAT8	N/A	-1	1	NONE	PUBLIC
1636	**Command**	**Description**	**NeedDate**	**Visibility**	**CmdVers**	**DestID**	**CmdID**			
1637	ta_tsc.tsc_fd_pos_rel	position the fine drive to a relative attitude	CAE_INVALID	PUBLIC	1	0	10004			
1638	**Argument**	**Arg_Description**	**NeedDate**	**Form**	**Representation**	**units**	**LoLimit**	**HiLimit**	**ValueType**	**Visibility**
1639	fd_des_pos_rel_quat	relative attitude quaternion component, (Precision: 1E-8) , (Accuracy: N/A) , [Matrix size: (min: 1), (max: 1)] Desired relative attitude quaternion for fine drive motions (meaning of quaternion depends on current TASCU mode: Local Stabilization mode = ICRF->TARF, Inertial Stabilization mode = IRF->TARF), [Quat_elem: (min: 4), (max: 4)]	CAE_INVALID	NUMBER	FLOAT8	N/A	-1	1	NONE	PUBLIC
1640	**Command**	**Description**	**NeedDate**	**Visibility**	**CmdVers**	**DestID**	**CmdID**			
1641	ta_tsc.tsc_fd_prog_track	program track that will be used to drive the telescope	CAE_INVALID	PUBLIC	1	0	10005			
1642	**Argument**	**Arg_Description**	**NeedDate**	**Form**	**Representation**	**units**	**LoLimit**	**HiLimit**	**ValueType**	**Visibility**
1643	fd_des_pt_id	Identifier of the currently stored program track file, (Precision: 1) , (Accuracy: N/A)	CAE_INVALID	NUMBER	UINT2	N/A	0	65535	NONE	PUBLIC
1644	fd_des_pt_interpol	Interpolation type for program track: STEP (position steps) or NEWTON (Newton interpolation of position entries), (Precision: N/A) , (Accuracy: N/A) , [ENUM: (1: STEP) (2: NEWTON)]	CAE_INVALID	ENUM	UINT1	N/A	1	2	NONE	PUBLIC
1645	fd_des_pt_size	Number of position entries in program track table (argument fd_des_pos_pt_quat). Allowable range depends on interpolation type (fd_des_pt_interpol): STEP (1..40), NEWTON (5..40), (Precision: 1) , (Accuracy: N/A)	CAE_INVALID	NUMBER	UINT2	N/A	1	40	NONE	PUBLIC

	A	B	C	D	E	F	G	H	I	J
1646	fd_des_pos_pt_quat	absolute attitude quaternion component, (Precision: 1E-8) , (Accuracy: N/A) , [Matrix size: (min: 40), (max: 40)] Set of program track absolute attitude quaternions defining fine drive motions (meaning of quaternion depends on current TASCU mode: Local Stabilization mode = ICRF->TARF, Inertial Stabilization mode = IRF->TARF), [Quat_elem: (min: 4), (max: 4)] absolute attitude quaternion for fine drive motions	CAE_INVALID	NUMBER	FLOAT8	N/A	-1	1	NONE	PUBLIC
1647	**Command**	**Description**	**NeedDate**	**Visibility**	**CmdVers**	**DestID**	**CmdID**			
1648	ta_tsc.tsc_fd_prog_track_control	activate and deactivate the program track function	CAE_INVALID	PUBLIC	1	0	10006			
1649	**Argument**	**Arg_Description**	**NeedDate**	**Form**	**Representation**	**units**	**LoLimit**	**HiLimit**	**ValueType**	**Visibility**
1650	fd_des_pt_control	Turns on and off program track, (Precision: N/A) , (Accuracy: N/A) , [ENUM: (1: OFF) (2: ON)]	CAE_INVALID	ENUM	UINT1	N/A	1	2	NONE	PUBLIC
1651	fd_des_pt_time_start	Start time for program track, (Precision: 20 ms) , (Accuracy: N/A)	CAE_INVALID	NUMBER	TIME8	seconds	0	2147483647	NONE	PUBLIC
1652	fd_des_pt_time_distance	Time distance between defined program track attitudes, (Precision: 20 ms) , (Accuracy: N/A)	CAE_INVALID	NUMBER	UINT2	milliseconds	20	20000	SET	PUBLIC
1653	**Command**	**Description**	**NeedDate**	**Visibility**	**CmdVers**	**DestID**	**CmdID**			
1654	ta_tsc.tsc_fd_prog_offset	program offset that will be superimposed on the telescope	CAE_INVALID	PUBLIC	1	0	10007			
1655	**Argument**	**Arg_Description**	**NeedDate**	**Form**	**Representation**	**units**	**LoLimit**	**HiLimit**	**ValueType**	**Visibility**
1656	fd_des_po_id	Identifier of the currently stored program offset file, (Precision: 1) , (Accuracy: N/A)	CAE_INVALID	NUMBER	UINT2	N/A	0	65535	NONE	PUBLIC
1657	fd_des_po_interpol	Interpolation type for program offset: STEP (position steps) or NEWTON (Newton interpolation of position entries), (Precision: N/A) , (Accuracy: N/A) , [ENUM: (1: STEP) (2: NEWTON)]	CAE_INVALID	ENUM	UINT1	N/A	1	2	NONE	PUBLIC
1658	fd_des_po_size	Number of position entries in program offset table (argument fd_des_pos_po_quat). Allowable range depends on interpolation type (fd_des_po_interpol): STEP (1..40), NEWTON (5..40), (Precision: 1) , (Accuracy: N/A)	CAE_INVALID	NUMBER	UINT2	N/A	1	40	NONE	PUBLIC

	A	B	C	D	E	F	G	H	I	J
1659	fd_des_pos_po_quat	relative attitude quaternion component, (Precision: 1E-8) , (Accuracy: N/A) , [Matrix size: (min: 1), (max: -1)] Set of program offset relative attitude quaternions defining fine drive motions (meaning of quaternion depends on current TASCU mode: Local Stabilization mode = ICRF->TARF, Inertial Stabilization mode = IRF->TARF), [Quat_elem: (min: 4), (max: 4)] relative attitude quaternion for fine drive motions	CAE_INVALID	NUMBER	FLOAT8	N/A	-1	1	NONE	PUBLIC
1660	**Command**	**Description**	**NeedDate**	**Visibility**	**CmdVers**	**DestID**	**CmdID**			
1661	ta_tsc.tsc_fd_prog_offset_control	activate and deactivate the program offset function	CAE_INVALID	PUBLIC	1	0	10008			
1662	**Argument**	**Arg_Description**	**NeedDate**	**Form**	**Representation**	**units**	**LoLimit**	**HiLimit**	**ValueType**	**Visibility**
1663	fd_des_po_control	Turns on and off program offset, (Precision: N/A) , (Accuracy: N/A) , [ENUM: (1: OFF) (2: ON)]	CAE_INVALID	ENUM	UINT1	N/A	1	2	NONE	PUBLIC
1664	fd_des_po_time_start	Start time for program offset, (Precision: 20 ms) , (Accuracy: N/A)	CAE_INVALID	NUMBER	TIME8	seconds	0	2147483647	NONE	PUBLIC
1665	fd_des_po_time_distance	Time distance between defined program offset attitudes, (Precision: 20 ms) , (Accuracy: N/A)	CAE_INVALID	NUMBER	UINT2	milliseconds	20	20000	SET	PUBLIC
1666	**Command**	**Description**	**NeedDate**	**Visibility**	**CmdVers**	**DestID**	**CmdID**			
1667	ta_tsc.tsc_fd_prog_bias	apply a relative attitude bias to attitudes generated by the current program track/offset	CAE_INVALID	PUBLIC	1	0	10009			
1668	**Argument**	**Arg_Description**	**NeedDate**	**Form**	**Representation**	**units**	**LoLimit**	**HiLimit**	**ValueType**	**Visibility**
1669	fd_des_prog_bias_quat	bias attitude quaternion component, (Precision: 1E-9) , (Accuracy: N/A) , [Matrix size: (min: 1), (max: 1)] Bias attitude quaternion for program track and/or program offset (meaning of quaternion depends on current TASCU mode: Local Stabilization mode = ICRF->TARF, Inertial Stabilization mode = IRF->TARF), [Quat_elem: (min: 4), (max: 4)]	CAE_INVALID	NUMBER	FLOAT8	N/A	-1	1	NONE	PUBLIC
1670	**Command**	**Description**	**NeedDate**	**Visibility**	**CmdVers**	**DestID**	**CmdID**			
1671	ta_tsc.tsc_fd_trc_offset	performs non-inertial motions by the tracking computer	CAE_INVALID	PUBLIC	1	0	10010			
1672	**Argument**	**Arg_Description**	**NeedDate**	**Form**	**Representation**	**units**	**LoLimit**	**HiLimit**	**ValueType**	**Visibility**
1673	fd_des_trc_offset_quat	offset attitude quaternion component, (Precision: 1E-9) , (Accuracy: N/A) , [Matrix size: (min: 1), (max: 1)] Offset attitude quaternion with regard to TARF that represents a non-inertial offset, [Quat_elem: (min: 4), (max: 4)]	CAE_INVALID	NUMBER	FLOAT8	N/A	-1	1	NONE	PUBLIC
1674	trc_offset_timestamp	Time at offset determination, (Precision: 1E6) , (Accuracy: N/A)	CAE_INVALID	NUMBER	TIME8	seconds	0	2147483647	NONE	PUBLIC

	A	B	C	D	E	F	G	H	I	J
1675	**Command**	**Description**	**NeedDate**	**Visibility**	**CmdVers**	**DestID**	**CmdID**			
1676	ta_tsc.tsc_fd_stop	stop the motion of the fine drive	CAE_INVALID	PUBLIC	1	0	10011			
1677	**Command**	**Description**	**NeedDate**	**Visibility**	**CmdVers**	**DestID**	**CmdID**			
1678	ta_tsc.tsc_atc_pos_corr	delivers the deviation between current IRF coordinates of TARF	CAE_INVALID	PUBLIC	1	0	12001			
1679	**Argument**	**Arg_Description**	**NeedDate**	**Form**	**Representation**	**units**	**LoLimit**	**HiLimit**	**ValueType**	**Visibility**
1680	atc_des_pos_corr_quat	correction attitude quaternion component, (Precision: 1E-9) , (Accuracy: N/A) , [Matrix size: (min: 1), (max: 1)] Relative correction attitude quaternion with regard to TARF (IRF->TARF), [Quat_elem: (min: 4), (max: 4)]	CAE_INVALID	NUMBER	FLOAT8	N/A	-1	1	NONE	PUBLIC
1681	trc_drift_quality_index	Quality of image evaluation, (Precision: 0.01) , (Accuracy: N/A)	CAE_INVALID	NUMBER	FLOAT4	N/A	0	1	NONE	PUBLIC
1682	trc_drift_imager_index	Accuracy of imager in use, (Precision: 0.01) , (Accuracy: N/A)	CAE_INVALID	NUMBER	FLOAT4	N/A	0	1	NONE	PUBLIC
1683	atc_des_corr_mode	Correction mode used by the servo system: IMMEDIATE (correct measured current IRF coordinates of TARF), ESTIMATE (estimate gyro drift), and IMMEDIATE_ESTIMATE (correct measured current IRF coordinates of TARF and estimate gyro drift), (Precision: N/A) , (Accuracy: N/A) , [ENUM: (1: IMMEDIATE) (2: ESTIMATE) (3: IMMEDIATE_ESTIMATE)]	CAE_INVALID	ENUM	UINT1	N/A	1	3	NONE	PUBLIC
1684	atc_des_drift_est_control	estimation: RESET_EL_XEL (reset EL and XEL gyro drift estimation algorithm), RESET_LOS (reset LOS gyro drift estimation algorithm), CONT_EL_XEL (continue with EL and XEL gyro drift estimation), CONT_LOS (continue with LOS gyrodrift estimation), and NO_DRIFT (estimated drift is not used), (Precision: N/A) , (Accuracy: N/A) , [ENUM: (1: RESET_EL_XEL) (2: RESET_LOS) (3: CONT_EL_XEL) (4: CONT_LOS) (5: NO_DRIFT)]	CAE_INVALID	ENUM	UINT1	N/A	1	5	NONE	PUBLIC
1685	trc_drift_timestamp	Time at center of image exposure time, (Precision: 1E6) , (Accuracy: N/A)	CAE_INVALID	NUMBER	TIME8	seconds	0	2147483647	NONE	PUBLIC
1686	trc_drift_exposure_time	Duration of image exposure, (Precision: 1) , (Accuracy: N/A)	CAE_INVALID	NUMBER	UINT2	milliseconds	10	10000	SET	PUBLIC
1687	**Command**	**Description**	**NeedDate**	**Visibility**	**CmdVers**	**DestID**	**CmdID**			
1688	ta_tsc.tsc_atc_traj_est	estimate the trajectory of a non-inertial object's motion	CAE_INVALID	PUBLIC	1	0	12002			
1689	**Argument**	**Arg_Description**	**NeedDate**	**Form**	**Representation**	**units**	**LoLimit**	**HiLimit**	**ValueType**	**Visibility**

	A	B	C	D	E	F	G	H	I	J
1690	atc_des_traj_dev_quat	deviation attitude quaternion component, (Precision: 1E-9) , (Accuracy: N/A) , [Matrix size: (min: 1), (max: 1)] Trajectory deviation attitude quaternion with regard to TARF calculated by tracking computer using 4 components in Type 2 3-1-3 Euler angle representation according to Wertz (Q4 real part). This quaternion represents a non-inertial offset., [Quat_elem: (min: 4), (max: 4)]	CAE_INVALID	NUMBER	FLOAT8	N/A	-1	1	NONE	PUBLIC
1691	trc_traj_quality_index	Noise on deviation measurement dependent on image quality and used imager, (Precision: 0.01) , (Accuracy: N/A)	CAE_INVALID	NUMBER	FLOAT4	N/A	0	1	NONE	PUBLIC
1692	trc_traj_imager_index	Accuracy of imager in use, (Precision: 0.01) , (Accuracy: N/A)	CAE_INVALID	NUMBER	FLOAT4	N/A	0	1	NONE	PUBLIC
1693	atc_des_traj_est_control	Controls the estimation algorithm for object trajectory estimation: RESET_EL_XEL (reset EL and XEL trajectory estimation algorithm), CONT_EL_XEL (continue with EL and XEL trajectory estimation algorithm), and NO_TRAJ (estimated trajectory is not used), (Precision: N/A) , (Accuracy: N/A) , [ENUM: (1: RESET_EL_XEL) (3: CONT_EL_XEL) (4: NO_TRAJ)]	CAE_INVALID	ENUM	UINT1	N/A	1	4	NONE	PUBLIC
1694	trc_traj_timestamp	Time at middle of image exposure time, (Precision: 1E6) , (Accuracy: N/A)	CAE_INVALID	NUMBER	TIME8	seconds	0	2147483647	NONE	PUBLIC
1695	trc_traj_exposure_time	Duration of image exposure, (Precision: 1) , (Accuracy: N/A)	CAE_INVALID	NUMBER	UINT2	milliseconds	10	10000	SET	PUBLIC
1696	**Command**	**Description**	**NeedDate**	**Visibility**	**CmdVers**	**DestID**	**CmdID**			
1697	ta_tsc.set_archive_nsample	Set the archive nsample for a data group	CAE_INVALID	PUBLIC	1	0	99999			
1698	**Argument**	**Arg_Description**	**NeedDate**	**Form**	**Representation**	**units**	**LoLimit**	**HiLimit**	**ValueType**	**Visibility**
1699	datagroup	Data group name, (Precision: N/A) , (Accuracy: N/A) , [ENUM: (1: tsc_mcs_hk)]	CAE_INVALID	ENUM	STRING	N/A	1	1	NONE	PUBLIC
1700	nsample	archive n sample value, (Precision: N/A) , (Accuracy: N/A) , (Default Type: FIXED, Value: 1)	CAE_INVALID	NUMBER	UINT4	N/A	0	4294967295	NONE	PUBLIC
1701	**ta_wfi** **List of TA Wide Field Imager (WFI) commands**									
1702	**Command**	**Description**	**NeedDate**	**Visibility**						
1703	ta_wfi.debug	Outputs software debug information	CAE_INVALID	PUBLIC						
1704	**Command**	**Description**	**NeedDate**	**Visibility**						
1705	ta_wfi.show_test_images	Indicates whether or not to process and display test images sent from the TA (system default is not to display test images)	CAE_INVALID	PUBLIC						
1706	**Argument**	**Arg_Description**	**NeedDate**	**Form**	**Representation**	**units**	**LoLimit**	**HiLimit**	**ValueType**	**Visibility**

	A	B	C	D	E	F	G	H	I	J
1707	state	A value of true causes test images to be be processed and displayed while a value of false causes test images to be ignored, [ENUM: (0: no) (1: yes)]	CAE_INVALID	ENUM	BOOL4	N/A			NONE	PUBLIC
1708	**Command**	**Description**	**NeedDate**	**Visibility**						
1709	ta_wfi.retransmit_packets	Indicates whether or not to re-transmit packets received from the imagers to the PI Patch Panel (system default is not to re-transmit the packets). The user may also specify a host and a port to transmit to- if a host and port are not specified, then the default host and port are used.	CAE_INVALID	PUBLIC						
1710	**Argument**	**Arg_Description**	**NeedDate**	**Form**	**Representation**	**units**	**LoLimit**	**HiLimit**	**ValueType**	**Visibility**
1711	state	A value of true causes packets to be re-transmitted to the PI Patch Panel while a value of false causes packets not to be re-transmitted, [ENUM: (0: no) (1: yes)]	CAE_INVALID	ENUM	BOOL4	N/A			NONE	PUBLIC
1712	host	The domain name or IP address of the host to re-transmit received imager packets to	CAE_INVALID	NUMBER	STRING	N/A			NONE	PUBLIC
1713	port	The port number to re-transmit received imager packets to	CAE_INVALID	NUMBER	UINT2	N/A			NONE	PUBLIC
1714	**Command**	**Description**	**NeedDate**	**Visibility**						
1715	ta_wfi.scaling_range	Specifies whether the MCS should automatically determine or use investigator input for the minimum and maximum pixel values to use when scaling images (system default is for the MCS to do it automatically)	CAE_INVALID	PUBLIC						
1716	**Argument**	**Arg_Description**	**NeedDate**	**Form**	**Representation**	**units**	**LoLimit**	**HiLimit**	**ValueType**	**Visibility**
1717	auto	A value of true causes the MCS to automatically find the min and max pixel values in the image while a value of false causes the MCS to use specified min and max values (see min and max arguments). This argument is not required if min and max are specified (manual mode is assumed). Similarly, if this argument is set to true, the min and max arguments are not required (they are ignored if provided)., [ENUM: (0: no) (1: yes)]	CAE_INVALID	ENUM	BOOL4	N/A			NONE	PUBLIC
1718	min	Minimum pixel value to use when scaling	CAE_INVALID	NUMBER	UINT2	N/A	0	16383	NONE	PUBLIC
1719	max	Maximum pixel value to use when scaling	CAE_INVALID	NUMBER	UINT2	N/A	0	16383	NONE	PUBLIC
1720	**Command**	**Description**	**NeedDate**	**Visibility**						
1721	ta_wfi.log	Causes the next received image to be written to file	CAE_INVALID	PUBLIC						
1722	**Argument**	**Arg_Description**	**NeedDate**	**Form**	**Representation**	**units**	**LoLimit**	**HiLimit**	**ValueType**	**Visibility**
1723	type	The format of the file data (binary or fits), [ENUM: (0: binary) (1: fits)]	CAE_INVALID	ENUM	STRING	N/A			NONE	PUBLIC

	A	B	C	D	E	F	G	H	I	J
1724	file	The file to write the image data to, do not add the file extension.	CAE_INVALID	NUMBER	STRING	N/A			NONE	PUBLIC
1725	comment	If the type of the file is fits, then the contents of this argument will be added as a comment to the FITS header	CAE_INVALID	NUMBER	STRING	N/A			NONE	PUBLIC
1726	n_times	Number of image files to write.	CAE_INVALID	NUMBER	INT4	N/A	1	100	NONE	PUBLIC
1727	**Command**	**Description**	**NeedDate**	**Visibility**						
1728	ta_wfi.image_to_hk	Causes the next received image to be sent to HK data	CAE_INVALID	PUBLIC						
1729	**Argument**	**Arg_Description**	**NeedDate**	**Form**	**Representation**	**units**	**LoLimit**	**HiLimit**	**ValueType**	**Visibility**
1730	type	The format of the HK data (binary or fits), [ENUM: (0: binary) (1: fits)]	CAE_INVALID	ENUM	STRING	N/A			NONE	PUBLIC
1731	comment	If the format type is fits, then the contents of this argument will be added as a comment to the FITS header	CAE_INVALID	NUMBER	STRING	N/A			NONE	PUBLIC

APPENDIX B. HOUSEKEEPING DATA

Housekeeping (HK) Data List

cdds	Cavity Door Drive System (CDDS) data
connect	Generic connection data produced by all proxies
coord	Data produced by the coordinate Commandable
dither	Data produced by the dither Commandable
fms	Flight Management System (FMS) data
nod	Data produced by the nod Commandable
rien	Template for data specific to science instrument teams
session	User session data logged by default
sma	Data produced by sma Commandable
ta	Telescope Assembly (TA) Commandable
ta_ffi	Fine Field Imager (FFI) data
ta_fpi	Focal Plane Imager (FPI) data
ta_mcp	TA Master Control Processor (MCP) data
ta_pos	Data produced by the TA Position Commandable
ta_sma	TA Secondary Mirror Assembly (SMA) data
ta_state	Data produced by the TA State Commandable
ta_trc	TA Tracker Controller (TRC) data
ta_tsc	TA Servo Control Unit (TASCU) data
ta_wfi	Wide Field Imager (WFI) data

	A	B	C	D	E	F	G	H	I
1	**cdds** **Cavity Door Drive System (CDDS) data**								
2	**HK NAME**	**Name**	**Rep**	**Units**	**Format**	**Form**	**lo_lim**	**hi_lim**	**Description**
3	rcs_id		STRING	none	%s	NUMBER			Version information for the XML file that defines this data source
4	archive_info								Archive Info
5	archive_info	archive_status	BOOL4	none	%s	ENUM	0	1	(0: false), (1: true),
6	archive_info	current_bytes_archived	FLOAT8	none	%1f	NUMBER	0		Total bytes written to the current ark file
7	archive_info	total_bytes_archived	FLOAT8	none	%1f	NUMBER	0		Total bytes written since this data source starts
8	archive_info	archive_file_name	STRING	none	%s	NUMBER			Archive file name
9	archive_nsamples								Archive nth sample for data groups, the part before the _nsample must match the data group node name
10	archive_nsamples	current_bytes_archived_nsample	INT4	N/A	%d	NUMBER	0		
11	archive_nsamples	total_bytes_archived_nsample	INT4	N/A	%d	NUMBER	0		
12	archive_nsamples	urd_position_nsample	INT4	N/A	%d	NUMBER	0		
13	archive_nsamples	urd_load_nsample	INT4	N/A	%d	NUMBER	0		
14	archive_nsamples	urd_velocity_nsample	INT4	N/A	%d	NUMBER	0		
15	archive_nsamples	lfd_position_nsample	INT4	N/A	%d	NUMBER	0		
16	archive_nsamples	lfd_load_nsample	INT4	N/A	%d	NUMBER	0		
17	archive_nsamples	lfd_velocity_nsample	INT4	N/A	%d	NUMBER	0		
18	archive_nsamples	urd_seal_status_nsample	INT4	N/A	%d	NUMBER	0		
19	archive_nsamples	urd_seal_vacuum_status_nsample	INT4	N/A	%d	NUMBER	0		
20	archive_nsamples	urd_seal_valve_status_nsample	INT4	N/A	%d	NUMBER	0		
21	archive_nsamples	urd_seal_supply_pressure_nsample	INT4	N/A	%d	NUMBER	0		
22	archive_nsamples	urd_seal_stepped_down_pressure_nsample	INT4	N/A	%d	NUMBER	0		
23	archive_nsamples	urd_seal_pressure_nsample	INT4	N/A	%d	NUMBER	0		
24	archive_nsamples	urd_seal_vent_pressure_nsample	INT4	N/A	%d	NUMBER	0		
25	archive_nsamples	aperture_limit_switches_nsample	INT4	N/A	%d	NUMBER	0		
26	archive_nsamples	urd_seal_system_fault_nsample	INT4	N/A	%d	NUMBER	0		
27	archive_nsamples	ifd_console_switch_setting_nsample	INT4	N/A	%d	NUMBER	0		
28	archive_nsamples	ifd_enable_switch_setting_nsample	INT4	N/A	%d	NUMBER	0		
29	cdds_alert								Alert produced by the Cavity Door Drive System

	A	B	C	D	E	F	G	H	I
30	cdds_alert	cdds_alert_info	STRING	none	%s	NUMBER			FYIs
31	cdds_alert	cdds_alert_warning	STRING	none	%s	NUMBER			TBD
32	cdds_alert	cdds_alert_error	STRING	none	%s	NUMBER			TBD
33	cdds_alert	cdds_alert_fatal	STRING	none	%s	NUMBER			TBD
34	cdds_alarm								Alarm produced by the Cavity Door Drive System
35	cdds_alarm	cdds_alarm_info	STRING	none	%s	NUMBER			FYIs
36	cdds_alarm	cdds_alarm_warning	STRING	none	%s	NUMBER			TBD
37	cdds_alarm	cdds_alarm_error	STRING	none	%s	NUMBER			TBD
38	cdds_alarm	cdds_alarm_fatal	STRING	none	%s	NUMBER			TBD
39	commanded_setpoint		FLOAT8	degrees	%.2f	NUMBER	23.15	58.2	LFD setpoint sent to the CDDS
40	setpoint_latency		FLOAT8	seconds	%lf	NUMBER			Time difference between TASCU ingestion into MCS and setpoint generation
41	timeout_rate		FLOAT8	Hz	%lf	NUMBER			Number of CDDS timeout complaints per second
42	urd_position		FLOAT8	degrees	%.2f	NUMBER	-10	90	Position of upper rigid door
43	urd_load		FLOAT8	pounds	%.0f	NUMBER	-10000	10000	Dynamic load of upper rigid door
44	urd_velocity		FLOAT8	degrees per second	%.2f	NUMBER	-10	10	Velocity of upper rigid door
45	lfd_position		FLOAT8	degrees	%.2f	NUMBER	19	61	Position of lower flexible door
46	lfd_load		FLOAT8	pounds	%.0f	NUMBER	-10000	10000	Dynamic load of lower flexible door
47	lfd_velocity		FLOAT8	degrees per second	%.2f	NUMBER	-10	10	Velocity of lower flexible door
48	urd_lfd_gap_flag		UINT4	none	%d	ENUM	0	1	Flag for gap between URD and LFD(0: NO_GAP), (1: GAP_CREATED),
49	ok_to_close_urd_flag		UINT4	none	%d	ENUM	0	1	After a system fault, flag that says if the URD can be closed(0: NOT_OK_TO_CLOSE), (1: OK_TO_CLOSE),
50	setpoint_comm_error								MCCS setpoint comm error
51	setpoint_comm_error	checksum	UINT4	none	%d	ENUM	0	1	Checksum error(0: VALID), (1: INVALID),
52	setpoint_comm_error	parity	UINT4	none	%d	ENUM	0	2	Parity error(0: VALID), (2: INVALID),
53	setpoint_comm_error	timeout	UINT4	none	%d	ENUM	0	4	Timeout error(0: NO_TIMEOUT), (4: TIMEOUT),
54	setpoint_comm_error	msgid	UINT4	none	%d	ENUM	0	8	Message ID error(0: VALID), (8: INVALID),
55	setpoint_error		FLOAT8	degrees	%.2f	NUMBER			Erroneous setpoint sent from MCS
56	urd_seal_status		UINT4	none	%d	ENUM	0	1	Status of URD seal(0: SEALED), (1: UNSEALED),
57	urd_seal_vacuum_status		UINT4	none	%d	ENUM	0	1	Status of URD seal vacuum pump(0: RUNNING), (1: STOPPED),
58	urd_seal_valve_status								URD seal valve status
59	urd_seal_valve_status	sov1	UINT4	none	%d	ENUM	0	1	Status of URD seal solenoid valve #1(0: OPEN), (1: CLOSED),
60	urd_seal_valve_status	sov2	UINT4	none	%d	ENUM	0	2	Status of URD seal solenoid valve #2(0: OPEN), (2: CLOSED),
61	urd_seal_valve_status	sov3	UINT4	none	%d	ENUM	0	4	Status of URD seal solenoid valve #3(0: OPEN), (4: CLOSED),
62	urd_seal_supply_pressure		FLOAT8	pounds per square inch	%.0f	NUMBER	0	4000	URD seal supply pressure

	A	B	C	D	E	F	G	H	I
63	urd_seal_stepped_down_pressure		FLOAT8	pounds per square inch	%.0f	NUMBER	0	100	URD seal stepped down pressure
64	urd_seal_pressure		FLOAT8	pounds per square inch	%.2f	NUMBER	0	50	URD seal pressure within the seal
65	urd_seal_vent_pressure		FLOAT8	pounds per square inch	%.2f	NUMBER	0	50	URD seal vent line pressure
66	aperture_limit_switches								Aperture limit switches
67	aperture_limit_switches	forward	UINT4	none	%d	ENUM	0	1	Status of forward aperture limit switch(0: NORMAL), (1: OPEN),
68	aperture_limit_switches	middle	UINT4	none	%d	ENUM	0	2	Status of middle aperture limit switch(0: NORMAL), (2: OPEN),
69	aperture_limit_switches	aft	UINT4	none	%d	ENUM	0	4	Status of aft aperture limit switch(0: NORMAL), (4: OPEN),
70	urd_over_torque		FLOAT8	pounds	%.0f	NUMBER	-10000	10000	Excessive URD torque measured
71	urd_over_speed		FLOAT8	degrees per second	%.2f	NUMBER	-10	10	Excessive URD speed measured
72	lfd_over_torque		FLOAT8	pounds	%.0f	NUMBER	-10000	10000	Excessive LFD torque measured
73	lfd_over_speed		FLOAT8	degrees per second	%.2f	NUMBER	-10	10	Excessive LFD speed measured
74	urd_end_of_travel		UINT4	none	%d	ENUM	0	1	URD end of travel flag(0: CLOSED_LIMIT), (1: OPEN_LIMIT),
75	lfd_end_of_travel		UINT4	none	%d	ENUM	0	1	LFD end of travel flag(0: CLOSED_LIMIT), (1: OPEN_LIMIT),

	A	B	C	D	E	F	G	H	I
76	startup_bit_failure		UINT4	none		ENUM	1	44	Startup BIT failure(1: SELF_TEST_PROCESSOR_INSTRUCTIONS), (2: RAM), (3: NON_VOLATILE_MEMORY), (4: EXTERNAL_WATCHDOG), (5: ROM), (6: PREVIOUS), (7: ADJUSTIBLE_PARAMETERS), (8: URD_UPPER_END_OF_TRAVEL_1), (9: URD_UPPER_END_OF_TRAVEL_2), (10: URD_LOWER_END_OF_TRAVEL_1), (11: URD_LOWER_END_OF_TRAVEL_2), (12: LFD_UPPER_END_OF_TRAVEL_1), (13: LFD_UPPER_END_OF_TRAVEL_2), (14: LFD_LOWER_END_OF_TRAVEL_1), (15: LFD_LOWER_END_OF_TRAVEL_2), (16: GAP_MONITOR_LATENT_1), (17: GAP_MONITOR_LATENT_2), (18: URD_UPPER_TORQUE_LIMIT_OVERTORQUE_MONITOR_A1), (19: URD_LOWER_TORQUE_LIMIT_OVERTORQUE_MONITOR_A1), (20: URD_UPPER_TORQUE_LIMIT_OVERTORQUE_MONITOR_A2), (21: URD_LOWER_TORQUE_LIMIT_OVERTORQUE_MONITOR_A2), (22: URD_UPPER_TORQUE_LIMIT_OVERTORQUE_MONITOR_B1), (23: URD_LOWER_TORQUE_LIMIT_OVERTORQUE_MONITOR_B1), (24: URD_UPPER_TORQUE_LIMIT_OVERTORQUE_MONITOR_B2), (25: URD_LOWER_TORQUE_LIMIT_OVERTORQUE_MONITOR_B2), (26: LFD_UPPER_TORQUE_LIMIT_OVERTORQUE_MONITOR_A1), (27: LFD_LOWER_TORQUE_LIMIT_OVERTORQUE_MONITOR_A1), (28: LFD_UPPER_TORQUE_LIMIT_OVERTORQUE_MONITOR_A2), (29: LFD_LOWER_TORQUE_LIMIT_OVERTORQUE_MONITOR_A2), (30: LFD_UPPER_TORQUE_LIMIT_OVERTORQUE_MONITOR_B1), (31: LFD_LOWER_TORQUE_LIMIT_OVERTORQUE_MONITOR_B1), (32: LFD_UPPER_TORQUE_LIMIT_OVERTORQUE_MONITOR_B2), (33: LFD_LOWER_TORQUE_LIMIT_OVERTORQUE_MONITOR_B2), (34: URD_POSITIVE_OVERSPEED_MONITOR_1), (35: URD_NEGATIVE_OVERSPEED_MONITOR_1), (36: URD_POSITIVE_OVERSPEED_MONITOR_2), (37: URD_NEGATIVE_OVERSPEED_MONITOR_2), (38: LFD_POSITIVE_OVERSPEED_MONITOR_1), (39: LFD_NEGATIVE_OVERSPEED_MONITOR_1), (40: LFD_POSITIVE_OVERSPEED_MONITOR_2), (41: LFD_NEGATIVE_OVERSPEED_MONITOR_2), (42: SHOP_MODE_ENABLED), (43: RS_422_LOOPBACK), (44: TORQUE_LOOPBACK),
77	continuous_bit_failure								Continuous BIT failure
78	continuous_bit_failure	crc_flight	UINT4	none	%d	ENUM	0	1	Status of Flight-Mode CRC BIT test(0: PASS), (1: FAIL),
79	continuous_bit_failure	crc_shop	UINT4	none	%d	ENUM	0	2	Status of Shop-Mode CRC BIT test(0: PASS), (2: FAIL),
80	urd_seal_system_fault								URD seal system fault
81	urd_seal_system_fault	source_pressure	UINT4	none	%d	ENUM	0	2	URD seal source pressure fault(0: OK), (1: FAULT), (2: WARN),
82	urd_seal_system_fault	stepped_down_pressure	UINT4	none	%d	ENUM	0	8	URD seal stepped down pressure fault(0: OK), (4: FAULT), (8: WARN),
83	urd_seal_system_fault	seal	UINT4	none	%d	ENUM	0	64	URD seal fault(0: OK), (64: FAULT),
84	urd_seal_system_fault	inflation_time	UINT4	none	%d	ENUM	0	128	URD seal inflation time fault(0: OK), (128: WARN),
85	urd_seal_system_fault	inflation_pressure	UINT4	none	%d	ENUM	0	512	URD seal inflation pressure fault(0: OK), (256: FAULT), (512: WARN),
86	urd_seal_system_fault	adjustible_param	UINT4	none	%d	ENUM	0	1024	URD seal adjustible parameter error fault(0: OK), (1024: WARN),
87	ac_power_event		UINT4	none	%d	ENUM	1	4	AC Power Event(1: POWER_UP), (2: UNDER_VOLTAGE), (3: UNDER_VOLTAGE_50MS), (4: UNDER_VOLTAGE_200MS),
88	dc_power_event		UINT4	none	%d	ENUM	1	4	DC Power Event(1: POWER_UP), (2: UNDER_VOLTAGE), (3: UNDER_VOLTAGE_50MS), (4: UNDER_VOLTAGE_200MS),
89	ifd_console_switch_setting		UINT4	none	%d	ENUM	0	8	CDDS opinion of IFD console switch(0: INDETERMINATE), (1: RESET), (2: CLOSE_PARK), (4: OPEN), (8: TRACK),

	A	B	C	D	E	F	G	H	I
90	ifd_enable_switch_setting		UINT4	none	%d	ENUM	1	2	CDDS opinion of IFD enable switch(1: ENABLE), (2: DISABLE),
91	drive_system_jammed								Drive system jammed event
92	drive_system_jammed	urd_open_sequence	UINT4	none	%d	ENUM	0	1	URD opening sequence(0: OK), (1: JAMMED),
93	drive_system_jammed	urd_close_sequence	UINT4	none	%d	ENUM	0	2	URD closing sequence(0: OK), (2: JAMMED),
94	urd_init_open_failure		UINT4	none	%d	ENUM	0	1	URD initial opening sequence failure(0: OPENED), (1: NOT_OPENED),
95	motor_controller_fault								Motor controller fault
96	motor_controller_fault	urd1	UINT4	none	%d	ENUM	0	1	URD controller #1(0: PASS), (1: FAIL),
97	motor_controller_fault	urd2	UINT4	none	%d	ENUM	0	2	URD controller #2(0: PASS), (2: FAIL),
98	motor_controller_fault	lfd1	UINT4	none	%d	ENUM	0	4	LFD controller #1(0: PASS), (4: FAIL),
99	motor_controller_fault	lfd2	UINT4	none	%d	ENUM	0	8	LFD controller #2(0: PASS), (8: FAIL),
100	position_monitor								Position monitor fault
101	position_monitor	urd	UINT4	none	%d	ENUM	0	1	URD position monitor(0: PASS), (1: FAIL),
102	position_monitor	lfd	UINT4	none	%d	ENUM	0	2	LFD position monitor(0: PASS), (2: FAIL),
103	uncommanded_motion								Uncommanded motion fault
104	uncommanded_motion	urd	UINT4	none	%d	ENUM	0	1	URD uncommanded motion monitor(0: PASS), (1: FAIL),
105	uncommanded_motion	lfd	UINT4	none	%d	ENUM	0	2	LFD uncommanded motion monitor(0: PASS), (2: FAIL),
106	loss_of_motion								Loss of motion fault
107	loss_of_motion	urd	UINT4	none	%d	ENUM	0	1	URD loss of motion monitor(0: PASS), (1: FAIL),
108	loss_of_motion	lfd	UINT4	none	%d	ENUM	0	2	LFD loss of motion monitor(0: PASS), (2: FAIL),
109	motor_current_monitor								Motor current monitor fault
110	motor_current_monitor	urd	UINT4	none	%d	ENUM	0	1	URD motor current monitor(0: PASS), (1: FAIL),
111	motor_current_monitor	lfd	UINT4	none	%d	ENUM	0	2	LFD motor current monitor(0: PASS), (2: FAIL),
112	motor_current_monitor	urd_secondary	UINT4	none	%d	ENUM	0	4	URD secondary motor current monitor(0: PASS), (4: FAIL),
113	motor_current_monitor	lfd_secondary	UINT4	none	%d	ENUM	0	8	LFD secondary motor current monitor(0: PASS), (8: FAIL),
114	motor_speed_monitor								Motor speed monitor fault
115	motor_speed_monitor	urd	UINT4	none	%d	ENUM	0	1	URD motor speed monitor(0: PASS), (1: FAIL),
116	motor_speed_monitor	lfd	UINT4	none	%d	ENUM	0	2	LFD motor speed monitor(0: PASS), (2: FAIL),
117	brake_fault								Brake fault
118	brake_fault	urd1	UINT4	none	%d	ENUM	0	1	URD drive #1 brake(0: PASS), (1: FAIL),
119	brake_fault	urd2	UINT4	none	%d	ENUM	0	2	URD drive #2 brake(0: PASS), (2: FAIL),
120	brake_fault	lfd1	UINT4	none	%d	ENUM	0	4	LFD drive #1 brake(0: PASS), (4: FAIL),
121	brake_fault	lfd2	UINT4	none	%d	ENUM	0	8	LFD drive #2 brake(0: PASS), (8: FAIL),
122	power_up								Power up mode and version
123	power_up	version	UINT4	none	%c	NUMBER			CDDS version
124	power_up	mode	UINT4	none	%d	ENUM			CDDS power-up mode(17920: FLIGHT_MODE), (21248: SHOP_MODE),
125	ifd_console_switch_invalid								Invalid IFD switch setting

	A	B	C	D	E	F	G	H	I
126	ifd_console_switch_invalid	indeterminate	UINT4	none	%d	ENUM	0	15	Indeterminate IFD console switch
127	ifd_console_switch_invalid	reset	UINT4	none	%d	ENUM	0	1	Reset IFD console switch
128	ifd_console_switch_invalid	close_park	UINT4	none	%d	ENUM	0	2	Closed IFD console switch
129	ifd_console_switch_invalid	open	UINT4	none	%d	ENUM	0	4	Open IFD console switch
130	ifd_console_switch_invalid	track	UINT4	none	%d	ENUM	0	8	Track IFD console switch
131	invalid_transition		UINT4	none	%d	NUMBER			Invalid transition detected
132	watchdog_reset		UINT4	none	%d	NUMBER			Watchdog reset fault
133	motor_enable_logic_fault								Motor enable logic fault
134	motor_enable_logic_fault	urd1	UINT4	none	%d	ENUM	0	1	URD motor 1 enable fault(0: PASS), (1: FAULTED),
135	motor_enable_logic_fault	urd2	UINT4	none	%d	ENUM	0	2	URD motor 2 enable faults(0: PASS), (2: FAULTED),
136	motor_enable_logic_fault	lfd1	UINT4	none	%d	ENUM	0	4	LFD drive 1 enable fault(0: PASS), (4: FAULTED),
137	motor_enable_logic_fault	lfd2	UINT4	none	%d	ENUM	0	8	LFD drive 2 enagble fault(0: PASS), (8: FAULTED),
138	positioning_mode								How the CDDS responds to telescope movement
139	positioning_mode	mode	UINT4	none	%d	ENUM	0	1	Flag for whether we are tracking manually or automatically(0: MANUAL), (1: AUTOMATIC),
140	positioning_mode	offset	FLOAT8	degrees	%.2f	NUMBER			Desired distance between the aperture and telescope elevation
141	**connect** **Generic connection data produced by all proxies**								
142	**HK NAME**	**Name**	**Rep**	**Units**	**Format**	**Form**	**lo_lim**	**hi_lim**	**Description**
143	mcstime		FLOAT8	seconds	%lf	NUMBER			time MCS received data
144	start_connection_time		FLOAT8	seconds	%f	NUMBER			Time the current connection state began
145	connected		STRING	none	%s	NUMBER			Indicates whether or not the connection exists
146	connection_num		FLOAT8	none	%f	NUMBER			Number of successful connections made
147	connection_losses		FLOAT8	none	%f	NUMBER			Number of connections that have been lost
148	current_reads		FLOAT8	none	%f	NUMBER			Number of reads on the current connection
149	total_reads		FLOAT8	none	%f	NUMBER			Total number of reads on all connections
150	current_writes		FLOAT8	none	%f	NUMBER			Number of writes on the current connection
151	total_writes		FLOAT8	none	%f	NUMBER			Total number of writes on all connections
152	current_bytes_read		FLOAT8	none	%f	NUMBER			Number of bytes read on the current connection
153	total_bytes_read		FLOAT8	none	%f	NUMBER			Total number of bytes read on all connections
154	current_bytes_written		FLOAT8	none	%f	NUMBER			Number of bytes written on the current connection
155	total_bytes_written		FLOAT8	none	%f	NUMBER			Total number of bytes written on all connections
156	**coord** **Data produced by the coordinate Commandable**								
157	**HK NAME**	**Name**	**Rep**	**Units**	**Format**	**Form**	**lo_lim**	**hi_lim**	**Description**
158	rcs_id		STRING	none	%s	NUMBER			Version information for the XML file that defines this data source

	A	B	C	D	E	F	G	H	I
159	archive_info								Archive Info
160	archive_info	archive_status	BOOL4	none	%s	ENUM	0	1	(0: false), (1: true),
161	archive_info	current_bytes_archived	FLOAT8	none	%1f	NUMBER	0		Total bytes written to the current ark file
162	archive_info	total_bytes_archived	FLOAT8	none	%1f	NUMBER	0		Total bytes written since this data source starts
163	archive_info	archive_file_name	STRING	none	%s	NUMBER			Archive file name
164	archive_nsamples								Archive nth sample for data groups, the part before the _nsample must match the data group node name
165	archive_nsamples	current_bytes_archived_nsample	INT4	N/A	%d	NUMBER	0		
166	archive_nsamples	total_bytes_archived_nsample	INT4	N/A	%d	NUMBER	0		
167	archive_nsamples	aoa_nsample	INT4	N/A	%d	NUMBER	0		
168	archive_nsamples	drift_axis_nsample	INT4	N/A	%d	NUMBER	0		
169	archive_nsamples	lst_nsample	INT4	N/A	%d	NUMBER	0		
170	archive_nsamples	drift_rate_nsample	INT4	N/A	%d	NUMBER	0		
171	archive_nsamples	aoi1							Archive nth sample for data groups under this node, the part before the _nsample must match the data group node name
172	archive_nsamples_aoi1	name_nsample	INT4	N/A	%d	NUMBER	0		
173	archive_nsamples_aoi1	erf_nsample	INT4	N/A	%d	NUMBER	0		
174	archive_nsamples	aoi2							Archive nth sample for data groups under this node, the part before the _nsample must match the data group node name
175	archive_nsamples_aoi2	name_nsample	INT4	N/A	%d	NUMBER	0		
176	archive_nsamples_aoi2	erf_nsample	INT4	N/A	%d	NUMBER	0		
177	archive_nsamples	aoi3							Archive nth sample for data groups under this node, the part before the _nsample must match the data group node name
178	archive_nsamples_aoi3	name_nsample	INT4	N/A	%d	NUMBER	0		
179	archive_nsamples_aoi3	erf_nsample	INT4	N/A	%d	NUMBER	0		
180	archive_nsamples	aoi4							Archive nth sample for data groups under this node, the part before the _nsample must match the data group node name
181	archive_nsamples_aoi4	name_nsample	INT4	N/A	%d	NUMBER	0		
182	archive_nsamples_aoi4	erf_nsample	INT4	N/A	%d	NUMBER	0		
183	archive_nsamples	aoi5							Archive nth sample for data groups under this node, the part before the _nsample must match the data group node name
184	archive_nsamples_aoi5	name_nsample	INT4	N/A	%d	NUMBER	0		
185	archive_nsamples_aoi5	erf_nsample	INT4	N/A	%d	NUMBER	0		
186	archive_nsamples	aoi6							Archive nth sample for data groups under this node, the part before the _nsample must match the data group node name
187	archive_nsamples_aoi6	name_nsample	INT4	N/A	%d	NUMBER	0		

	A	B	C	D	E	F	G	H	I
188	archive_nsamples_aoi6	erf_nsample	INT4	N/A	%d	NUMBER	0		
189	archive_nsamples	aoi7							Archive nth sample for data groups under this node, the part before the _nsample must match the data group node name
190	archive_nsamples_aoi7	name_nsample	INT4	N/A	%d	NUMBER	0		
191	archive_nsamples_aoi7	erf_nsample	INT4	N/A	%d	NUMBER	0		
192	archive_nsamples	aoi8							Archive nth sample for data groups under this node, the part before the _nsample must match the data group node name
193	archive_nsamples_aoi8	name_nsample	INT4	N/A	%d	NUMBER	0		
194	archive_nsamples_aoi8	erf_nsample	INT4	N/A	%d	NUMBER	0		
195	commands		STRING	none	%s	NUMBER			Contains the last SCL command sent to coord
196	responses								Contains SCL responses for coord commands
197	responses	resume	STRING	none	%s	NUMBER			Last SCL response sent back to the issuer of the resume command
198	responses	suspend	STRING	none	%s	NUMBER			Last SCL response sent back to the issuer of the suspend command
199	responses	set	STRING	none	%s	NUMBER			Last SCL response sent back to the issuer of the set command
200	responses	verbose	STRING	none	%s	NUMBER			Last SCL response sent back to the issuer of the verbose command
201	responses	quiet	STRING	none	%s	NUMBER			Last SCL response sent back to the issuer of the quiet command
202	responses	position	STRING	none	%s	NUMBER			Last SCL response sent back to the issuer of the position command
203	responses	aoiset	STRING	none	%s	NUMBER			Last SCL response sent back to the issuer of the aoiset command
204	responses	rf	STRING	none	%s	NUMBER			Last SCL response sent back to the issuer of the rf command
205	responses	list	STRING	none	%s	NUMBER			Last SCL response sent back to the issuer of the list command
206	responses	delete	STRING	none	%s	NUMBER			Last SCL response sent back to the issuer of the delete command
207	responses	delta	STRING	none	%s	NUMBER			Last SCL response sent back to the issuer of the delta command
208	responses	convert	STRING	none	%s	NUMBER			Last SCL response sent back to the issuer of the convert command
209	responses	gyro_watch	STRING	none	%s	NUMBER			Last SCL response sent back to the issuer of the gyro_watch command
210	responses	gyro_done	STRING	none	%s	NUMBER			Last SCL response sent back to the issuer of the gyro_done command
211	responses	instrument	STRING	none	%s	NUMBER			Last SCL response sent back to the issuer of the instrument command
212	responses	init	STRING	none	%s	NUMBER			Last SCL response sent back to the issuer of the init command
213	responses	correct	STRING	none	%s	NUMBER			Last SCL response sent back to the issuer of the correct command
214	coord_alert								Alert produced by the Coordinate database programs
215	coord_alert	coord_alert_info	STRING	none	%s	NUMBER			FYIs
216	coord_alert	coord_alert_warning	STRING	none	%s	NUMBER			TBD
217	coord_alert	coord_alert_error	STRING	none	%s	NUMBER			TBD
218	coord_alert	coord_alert_fatal	STRING	none	%s	NUMBER			TBD
219	coord_alarm								Alarm produced by the Coordinate database programs
220	coord_alarm	coord_alarm_info	STRING	none	%s	NUMBER			FYIs
221	coord_alarm_coord_alarm_info	redefine							
222	coord_alarm_coord_alarm_info	delete							

	A	B	C	D	E	F	G	H	I
223	coord_alarm_coord_alarm_info	create							
224	coord_alarm	coord_alarm_warning	STRING	none	%s	NUMBER			TBD
225	coord_alarm	coord_alarm_error	STRING	none	%s	NUMBER			TBD
226	coord_alarm	coord_alarm_fatal	STRING	none	%s	NUMBER			TBD
227	boresight		STRING		%s	NUMBER			Boresight location currently in use
228	update_rate		FLOAT8	hertz	%f	NUMBER	1	500	periodic activity rate
229	vlsr_itvl		FLOAT8	seconds	%lf	NUMBER	0.5	3600	interval between VLSR/VLOS calculations
230	oper_state		INT4	none	0x%2.2X	NUMBER			Operating state
231	aoa		FLOAT8	degrees	%f	NUMBER	-90	90	mean pitch of the aircraft
232	vlsr		VECTOR24	meters per second	%lf	NUMBER	0	99000	Velocity with respect to the Local Standard of Rest
233	vlos		FLOAT8	meters per second	%lf	NUMBER	0	99000	Velocity along the Line Of Sight
234	drift_axis		UVECTOR24	none		NUMBER			current gyro drift axis
235	lst		FLOAT8	sidereal hours	%.1sgh	NUMBER			local sidereal time
236	sky_los_rate		FLOAT8	degrees per hour	%lf	NUMBER			Sky rotation rate estimated from actual conditions
237	drift_rate		FLOAT8	degrees per second	%lf	NUMBER			mean gyro drift rate
238	current_instrument		STRING	none	%s	NUMBER			current SI name
239	pos								Growable list of defined Position objects
240	pos	all_names	STRING		%s	NUMBER			ASCII list of the Position names
241	pos	number	INT4	none	%d	NUMBER	0		Number of Positions currently defined
242	pos	last_changed	STRING		%s	NUMBER			Last Position or AOI that was added or deleted
243	pos	last_distributed	STRING		%s	NUMBER			Last Position that was distributed
244	pos	ANY							Individual Position object
245	pos_ANY	state	INT4	N/A	%d	ENUM	-1	3	Is the data valid?(-1: deleted), (0: uninitialized), (1: created), (2: inactive), (3: active),
246	pos_ANY	debug	STRING	N/A	%s	NUMBER			Tag for debugging
247	pos_ANY	erf_quat	UQUAT32	N/A	%lf	NUMBER	-1	1	Position expressed as a unitary quaternion
248	pos_ANY	ra	FLOAT8	sidereal hours	%.3sgh	NUMBER	-12	24	Right Ascension for the Position or AOI chop image
249	pos_ANY	dec	FLOAT8	degrees	%.3sgd	NUMBER	-90	90	declination for the Position or AOI chop image
250	pos_ANY	vpa	FLOAT8	degrees	%lf	NUMBER	-180	360	VPA for the Position or AOI chop image
251	pos_ANY	tarf_quat	UQUAT32	N/A	%lf	NUMBER	-1	1	Position expressed as a unitary quaternion
252	pos_ANY	el	FLOAT8	degrees	%lf	NUMBER	-90	90	telescope elevation for the Position or AOI chop image
253	pos_ANY	xel	FLOAT8	degrees	%lf	NUMBER	-180	180	Cross-elevation for the Position or AOI chop image
254	pos_ANY	los	FLOAT8	degrees	%lf	NUMBER	-180	180	LOS for the Position or AOI chop image
255	pos_ANY	irf_quat	UQUAT32	N/A	%lf	NUMBER	-1	1	Position expressed as a unitary quaternion
256	pos_ANY	irf_u	FLOAT8	none	%lf	NUMBER	-1	1	IRF Cartesian coordinate along elevation axis

	A	B	C	D	E	F	G	H	I
257	pos_ANY	irf_v	FLOAT8	none	%lf	NUMBER	-1	1	IRF Cartesian coordinate along cross-elevation axis
258	pos_ANY	irf_w	FLOAT8	none	%lf	NUMBER	-1	1	IRF Cartesian coordinate along LOS axis
259	pos_ANY	alt	FLOAT8	degrees	%lf	NUMBER	-90	90	object elevation above the horizon
260	pos_ANY	azim	FLOAT8	degrees	%lf	NUMBER	-180	360	object direction in degrees clockwise from north
261	pos_ANY	wfi_quat	UQUAT32	N/A	%lf	NUMBER	-1	1	Position expressed as a unitary quaternion
262	pos_ANY	xwfi	FLOAT8	pixels	%lf	NUMBER			WFI column for the Position or AOI chop image
263	pos_ANY	ywfi	FLOAT8	pixels	%lf	NUMBER			WFI row for the Position or AOI chop image
264	pos_ANY	si_quat	UQUAT32	N/A	%lf	NUMBER	-1	1	Position expressed as a unitary quaternion
265	pos_ANY	xsi	FLOAT8	pixels	%lf	NUMBER			SI column for the Position or AOI chop image
266	pos_ANY	ysi	FLOAT8	pixels	%lf	NUMBER			SI row for the Position or AOI chop image
267	pos_ANY	ffi_quat	UQUAT32	N/A	%lf	NUMBER	-1	1	Position expressed as a unitary quaternion
268	pos_ANY	xffi	FLOAT8	pixels	%lf	NUMBER			FFI column for the Position or AOI chop image
269	pos_ANY	yffi	FLOAT8	pixels	%lf	NUMBER			FFI row for the Position or AOI chop image
270	pos_ANY	fpi_quat	UQUAT32	N/A	%lf	NUMBER	-1	1	Position expressed as a unitary quaternion
271	pos_ANY	xfpi	FLOAT8	pixels	%lf	NUMBER			FPI column for the Position or AOI chop image
272	pos_ANY	yfpi	FLOAT8	pixels	%lf	NUMBER			FPI row for the Position or AOI chop image
273	pos_ANY	centroid	STRING	N/A	%s	NUMBER			Default centroid AOI for tracking
274	pos_ANY	rof1	STRING	N/A	%s	NUMBER			Default rof #1 AOI for tracking
275	pos_ANY	rof2	STRING	N/A	%s	NUMBER			Default rof #2 AOI for tracking
276	pos_ANY	limb1	STRING	N/A	%s	NUMBER			Default limb #1 AOI for tracking
277	pos_ANY	limb2	STRING	N/A	%s	NUMBER			Default limb #2 AOI for tracking
278	pos_ANY	inertial	BOOL4	N/A	%s	ENUM	0	1	Tracking inertially?(0: no), (1: yes),
279	pos_ANY	chop	STRING	N/A	%s	NUMBER			Default chop point for TARF and tracking
280	pos_ANY	upper_left	STRING	pixels	%s	NUMBER			Starting pixel of the AOI (supplied as [col row])
281	pos_ANY	lower_right	STRING	pixels	%s	NUMBER			End pixel of the AOI (supplied as [col row])
282	pos_ANY	user_count	INT4	N/A	%d	NUMBER	-1	100	Number of threads using the AOI
283	pos_ANY	type_code	INT4	N/A	0x%X	NUMBER	0		Type of Position object
284	position								user-settable defaults for the coord.position command
285	position	action	STRING	N/A	%s	ENUM			Default action if new argument is wrong(-1: error), (0: ignore), (1: query),
286	rf								user-settable defaults for the coord.rf command
287	rf	action	STRING	N/A	%s	ENUM			Default action if new argument is wrong(-1: error), (0: ignore), (1: query),
288	aoiset								user-settable defaults for the coord.aoiset command
289	aoiset	action	STRING	N/A	%s	ENUM			Default action if new argument is wrong(-1: error), (0: ignore), (1: query),
290	aoiset	threshold	FLOAT8		%lf	NUMBER			Default threshold value for coord.aoiset command
291	aoiset	range_limit	FLOAT8		%lf	NUMBER	0	100	Default centroiding range limit for coord.aoiset command
292	aoiset	binned	INT4		%d	ENUM			Default binned value for coord.aoiset command(0: current), (1: 1x1), (2: 2x2), (4: 4x4),
293	delete								user-settable defaults for the coord.delete command
294	delete	action	STRING	N/A	%s	ENUM			Default action if new argument is wrong(0: ignore), (1: query),
295	delta								user-settable defaults for the coord.delta command
296	delta	action	STRING	N/A	%s	ENUM			Default action if new argument is wrong(-1: error), (0: ignore), (1: query),

	A	B	C	D	E	F	G	H	I
297	WFI								Wide Field Imager description data
298	FFI								Fine Field Imager description data
299	FPI								Focal Plane Imager description data
300	WFI								Wide Field Imager description data
301	FFI								Fine Field Imager description data
302	FPI								Focal Plane Imager description data
303	**dither** **Data produced by the dither Commandable**								
304	rcs_id		STRING	none	%s	NUMBER			Version information for the XML file that defines this data source
305	archive_info								Archive Info
306	archive_info	archive_status	BOOL4	none	%s	ENUM	0	1	(0: false), (1: true),
307	archive_info	current_bytes_archived	FLOAT8	none	%1f	NUMBER	0		Total bytes written to the current ark file
308	archive_info	total_bytes_archived	FLOAT8	none	%1f	NUMBER	0		Total bytes written since this data source starts
309	archive_info	archive_file_name	STRING	none	%s	NUMBER			Archive file name
310	archive_nsamples								Archive nth sample for data groups, the part before the _nsample must match the data group dithere name
311	archive_nsamples	current_bytes_archived_nsample	INT4	N/A	%d	NUMBER	0		
312	archive_nsamples	total_bytes_archived_nsample	INT4	N/A	%d	NUMBER	0		
313	commands		STRING	none	%s	NUMBER			Contains the last SCL command sent to dither
314	responses								Contains SCL responses for dither commands
315	responses	resume	STRING	none	%s	NUMBER			Last SCL response sent back to the issuer of the resume command
316	responses	suspend	STRING	none	%s	NUMBER			Last SCL response sent back to the issuer of the suspend command
317	responses	set	STRING	none	%s	NUMBER			Last SCL response sent back to the issuer of the set command
318	responses	verbose	STRING	none	%s	NUMBER			Last SCL response sent back to the issuer of the verbose command
319	responses	quiet	STRING	none	%s	NUMBER			Last SCL response sent back to the issuer of the quiet command
320	responses	define	STRING	none	%s	NUMBER			Last SCL response sent back to the issuer of the define command
321	responses	insert	STRING	none	%s	NUMBER			Last SCL response sent back to the issuer of the insert command
322	responses	goto	STRING	none	%s	NUMBER			Last SCL response sent back to the issuer of the goto command
323	responses	next	STRING	none	%s	NUMBER			Last SCL response sent back to the issuer of the next command
324	dither_alert								Alert produced by the Dither Commandable
325	dither_alert	dither_alert_info	STRING		%s	NUMBER			Informational messages (events)
326	dither_alert	dither_alert_warning	STRING		%s	NUMBER			Events requiring user action for recovery
327	dither_alert	dither_alert_error	STRING		%s	NUMBER			Non-recoverable problems which are not fatal
328	dither_alert	dither_alert_fatal	STRING		%s	NUMBER			Fatal problems
329	dither_alarm								Alarm produced by the Dither Commandable
330	dither_alarm	dither_alarm_info	STRING		%s	NUMBER			Normal events requiring user confirmation
331	dither_alarm	dither_alarm_warning	STRING		%s	NUMBER			Abnormal events requiring user confirmation
332	dither_alarm	dither_alarm_error	STRING		%s	NUMBER			Serious problems requiring user confirmation
333	dither_alarm	dither_alarm_fatal	STRING		%s	NUMBER			Fatal problems requiring user confirmation
334	points								Growable list of dither points
335	points	all_names	STRING		%s	NUMBER			ASCII list of the dither names
336	points	number	INT4	N/A	%d	NUMBER	0		Number of dither positions currently defined

	A	B	C	D	E	F	G	H	I
337	points	last_changed	STRING		%s	NUMBER			Last dither position that was added or deleted
338	points	last_distributed	STRING		%s	NUMBER			Last dither point that was distributed
339	points	ANY							Individual dither point
340	points_ANY	delta_ra	FLOAT8	sidereal seconds	%lf	NUMBER			Delta Right Ascension for the dither point
341	points_ANY	delta_dec	FLOAT8	arcseconds	%lf	NUMBER			Delta declination for the dither point
342	points_ANY	delta_el	FLOAT8	arcseconds	%lf	NUMBER			Delta telescope elevation for the dither point
343	points_ANY	delta_xel	FLOAT8	arcseconds	%lf	NUMBER			Delta cross-elevation for the dither point
344	points_ANY	delta_xsi	FLOAT8	pixels	%lf	NUMBER			Change in SI x-pixels for the dither point
345	points_ANY	delta_ysi	FLOAT8	pixels	%lf	NUMBER			Change in SI y-pixels for the dither point
346	points_ANY	delta_xfpi	FLOAT8	pixels	%lf	NUMBER			Change in FPI X-pixels for the dither point
347	points_ANY	delta_yfpi	FLOAT8	pixels	%lf	NUMBER			Change in FPI Y-pixels for the dither point
348	points_ANY	delta_xffi	FLOAT8	pixels	%lf	NUMBER			Change in FFI X-pixels for the dither point
349	points_ANY	delta_yffi	FLOAT8	pixels	%lf	NUMBER			Change in FFI Y-pixels for the dither point
350	points_ANY	delta_xwfi	FLOAT8	pixels	%lf	NUMBER			Change in WFI X-pixels for the dither point
351	points_ANY	delta_ywfi	FLOAT8	pixels	%lf	NUMBER			Change in WFI Y-pixels for the dither point
352	oper_state		INT4	none	0x%2.2X	NUMBER			Operating state
353	update_rate		FLOAT8	hertz	%lf	NUMBER	1	500	periodic activity rate
354	current		STRING		%s	NUMBER			Current dither position
355	next		STRING		%s	NUMBER			Next dither position
356	sequence		STRING		%s	NUMBER			Current sequence of dither positions.
357	**fms** **Flight Management System (FMS) data**								
358	**HK NAME**	**Name**	**Rep**	**Units**	**Format**	**Form**	**lo_lim**	**hi_lim**	**Description**
359	rcs_id		STRING	none	%s	NUMBER			Version information for the XML file that defines this data source
360	fms_alert								Alert produced by the Flight Management System (FMS)
361	fms_alert	fms_alert_info	STRING	none	%s	NUMBER			FYIs
362	fms_alert	fms_alert_warning	STRING	none	%s	NUMBER			TBD
363	fms_alert	fms_alert_error	STRING	none	%s	NUMBER			TBD
364	fms_alert	fms_alert_fatal	STRING	none	%s	NUMBER			TBD
365	fms_alarm								Alarm produced by the Flight Management System (FMS)
366	fms_alarm	fms_alarm_info	STRING	none	%s	NUMBER			FYIs
367	fms_alarm	fms_alarm_warning	STRING	none	%s	NUMBER			TBD
368	fms_alarm	fms_alarm_error	STRING	none	%s	NUMBER			TBD
369	fms_alarm	fms_alarm_fatal	STRING	none	%s	NUMBER			TBD
370	altitude		INT4	feet	%d	NUMBER			Baro corrected altitude
371	latitude		FLOAT8	degrees	%f	NUMBER			Current latitude of the aircraft
372	longitude		FLOAT8	degrees	%f	NUMBER			Current longitude of the aircraft
373	ground_speed		FLOAT8	knots	%f	NUMBER			Current ground speed of the aircraft
374	track_angle		FLOAT8	degrees	%f	NUMBER			True track angle of the aircraft
375	heading		FLOAT8	degrees	%f	NUMBER			True heading of the aircraft
376	wind_speed		FLOAT8	knots	%f	NUMBER			Current wind speed

	A	B	C	D	E	F	G	H	I
377	wind_angle		FLOAT8	degrees	%f	NUMBER			Current wind angle
378	pitch_angle		FLOAT8	degrees	%f	NUMBER			Current pitch angle of the aircraft
379	roll_angle		FLOAT8	degrees	%f	NUMBER			Current roll angle of the aircraft
380	ns_velocity		FLOAT8	knots	%f	NUMBER			North-south wind velocity
381	ew_velocity		FLOAT8	knots	%f	NUMBER			East-west wind velocity
382	hipotest HIPO-specific HK data **INTENTIONALLY Omitted**								
383	**nod** **Data produced by the nod Commandable**								
384	**HK NAME**	**Name**	**Rep**	**Units**	**Format**	**Form**	**lo_lim**	**hi_lim**	**Description**
385	rcs_id		STRING	none	%s	NUMBER			Version information for the XML file that defines this data source
386	archive_info								Archive Info
387	archive_info	archive_status	BOOL4	none	%s	ENUM	0	1	(0: false), (1: true),
388	archive_info	current_bytes_archived	FLOAT8	none	%1f	NUMBER	0		Total bytes written to the current ark file
389	archive_info	total_bytes_archived	FLOAT8	none	%1f	NUMBER	0		Total bytes written since this data source starts
390	archive_info	archive_file_name	STRING	none	%s	NUMBER			Archive file name
391	archive_nsamples								Archive nth sample for data groups, the part before the _nsample must match the data group node name
392	archive_nsamples	current_bytes_archived_nsample	INT4	N/A	%d	NUMBER	0		
393	archive_nsamples	total_bytes_archived_nsample	INT4	N/A	%d	NUMBER	0		
394	commands		STRING	none	%s	NUMBER			Contains the last SCL command sent to nod
395	responses								Contains SCL responses for nod commands
396	responses	resume	STRING	none	%s	NUMBER			Last SCL response sent back to the issuer of the resume command
397	responses	suspend	STRING	none	%s	NUMBER			Last SCL response sent back to the issuer of the suspend command
398	responses	set	STRING	none	%s	NUMBER			Last SCL response sent back to the issuer of the set command
399	responses	verbose	STRING	none	%s	NUMBER			Last SCL response sent back to the issuer of the verbose command
400	responses	quiet	STRING	none	%s	NUMBER			Last SCL response sent back to the issuer of the quiet command
401	responses	define	STRING	none	%s	NUMBER			Last SCL response sent back to the issuer of the define command
402	responses	correct	STRING	none	%s	NUMBER			Last SCL response sent back to the issuer of the correct command
403	responses	goto	STRING	none	%s	NUMBER			Last SCL response sent back to the issuer of the goto command
404	responses	next	STRING	none	%s	NUMBER			Last SCL response sent back to the issuer of the next command
405	nod_alert								Alert produced by the Nod Commandable
406	nod_alert	nod_alert_info	STRING		%s	NUMBER			Informational messages (events)
407	nod_alert	nod_alert_warning	STRING		%s	NUMBER			Events requiring user action for recovery
408	nod_alert	nod_alert_error	STRING		%s	NUMBER			Non-recoverable problems which are not fatal
409	nod_alert	nod_alert_fatal	STRING		%s	NUMBER			Fatal problems
410	nod_alarm								Alarm produced by the Nod Commandable
411	nod_alarm	nod_alarm_info	STRING		%s	NUMBER			Normal events requiring user confirmation
412	nod_alarm	nod_alarm_warning	STRING		%s	NUMBER			Abnormal events requiring user confirmation
413	nod_alarm	nod_alarm_error	STRING		%s	NUMBER			Serious problems requiring user confirmation

	A	B	C	D	E	F	G	H	I
414	nod_alarm	nod_alarm_fatal	STRING		%s	NUMBER			Fatal problems requiring user confirmation
415	position		STRING		%s	NUMBER			Which beam the telescope is in
416	beams								List of nod beams
417	beams	all_names	STRING		%s	NUMBER			ASCII list of the nod names
418	beams	number	INT4	none	%d	NUMBER	0		Number of beam positions currently defined
419	beams	last_changed	STRING		%s	NUMBER			Last beam that was added or deleted
420	beams	last_distributed	STRING		%s	NUMBER			Last beam that was distributed
421	beams	ANY							Individual nod beam
422	beams_ANY	delta_ra	FLOAT8	sidereal hours	%lf	NUMBER			Delta Right Ascension for the plus beam
423	beams_ANY	delta_dec	FLOAT8	degrees	%lf	NUMBER			Delta declination for the plus beam
424	beams_ANY	delta_el	FLOAT8	degrees	%lf	NUMBER			Change in fine-drive elevation for the plus beam
425	beams_ANY	delta_xel	FLOAT8	degrees	%lf	NUMBER			Change in fine-drive cross-elevation for the plus beam
426	beams_ANY	delta_xsi	FLOAT8	pixels	%lf	NUMBER			Change in SI x-pixels for the plus beam
427	beams_ANY	delta_ysi	FLOAT8	pixels	%lf	NUMBER			Change in SI y-pixels for the plus beam
428	beams_ANY	delta_xfpi	FLOAT8	pixels	%lf	NUMBER			Change in FPI X-pixels for the plus beam
429	beams_ANY	delta_yfpi	FLOAT8	pixels	%lf	NUMBER			Change in FPI Y-pixels for the plus beam
430	beams_ANY	delta_xffi	FLOAT8	pixels	%lf	NUMBER			Change in FFI X-pixels for the plus beam
431	beams_ANY	delta_yffi	FLOAT8	pixels	%lf	NUMBER			Change in FFI Y-pixels for the plus beam
432	beams_ANY	delta_xwfi	FLOAT8	pixels	%lf	NUMBER			Change in WFI X-pixels for the plus beam
433	beams_ANY	delta_ywfi	FLOAT8	pixels	%lf	NUMBER			Change in WFI Y-pixels for the plus beam
434	define								values for the nod.define command
435	define	amplitude	FLOAT8	arcseconds	%lf	NUMBER	0		Size of the primary throw (between X and A)
436	define	amp2	FLOAT8	arcseconds	%lf	NUMBER	0		Size of the secondary throw (between X and B)
437	define	profile	INT4		%i	NUMBER	2	3	Number of nod beams
438	define	coord_sys	STRING		%s	NUMBER			Coordinate system for pos_angle
439	define	pos_angle	FLOAT8	degrees	%lf	NUMBER	-180	360	Angle of the nod axis
440	define	track_pos_a	STRING		%s	NUMBER			Position whose AOIs are used to track at beam A?
441	define	track_pos_b	STRING		%s	NUMBER			Position whose AOIs are used to track at beam B?
442	define	track_pos_x	STRING		%s	NUMBER			Position whose AOIs are used to track at beam X?
443	oper_state		INT4	none	0x%2.2X	NUMBER			Operating state
444	update_rate		FLOAT8	hertz	%lf	NUMBER	1	500	periodic activity rate
445	current		STRING		%s	NUMBER			Current nod position
446	next		STRING		%s	NUMBER			Next nod position
447	amplitude		FLOAT8	arcseconds	%lf	NUMBER	0		Size of the primary throw (between X and A)
448	amp2		FLOAT8	arcseconds	%lf	NUMBER	0		Size of the secondary throw (between X and B)
449	profile		INT4		%i	NUMBER	2	3	Number of nod beams

	A	B	C	D	E	F	G	H	I
450	coord_sys		STRING		%s	NUMBER			Coordinate system for pos_angle
451	pos_angle		FLOAT8	degrees	%lf	NUMBER	-180	360	Angle of the nod axis
452	track_pos_a		STRING		%s	NUMBER			Position whose AOIs are used to track at beam A?
453	track_pos_b		STRING		%s	NUMBER			Position whose AOIs are used to track at beam B?
454	track_pos_x		STRING		%s	NUMBER			Position whose AOIs are used to track at beam X?
455	**rien** **Template for data specific to science instrument teams**								
456	**HK NAME**	**Name**	**Rep**	**Units**	**Format**	**Form**	**lo_lim**	**hi_lim**	**Description**
457	rcs_id		STRING	none	%s	NUMBER			Version information for the XML file that defines this data source
458	archive_info								Archive Info
459	archive_info	archive_status	BOOL4	none	%s	ENUM	0	1	(0: false), (1: true),
460	archive_info	current_bytes_archived	FLOAT8	none	%1f	NUMBER	0		Total bytes written to the current ark file
461	archive_info	total_bytes_archived	FLOAT8	none	%1f	NUMBER	0		Total bytes written since this data source starts
462	archive_info	archive_file_name	STRING	none	%s	NUMBER			Archive file name
463	archive_nsamples								Archive nth sample for data groups, the part before the _nsample must match the data group node name
464	archive_nsamples	current_bytes_archived_nsample	INT4	N/A	%d	NUMBER	0		
465	archive_nsamples	total_bytes_archived_nsample	INT4	N/A	%d	NUMBER	0		
466	commands		STRING	none	%s	NUMBER			Contains the last SCL command sent to rien
467	responses								Contains SCL responses for rien commands
468	responses	resume	STRING	none	%s	NUMBER			Last SCL response sent back to the issuer of the resume command
469	responses	suspend	STRING	none	%s	NUMBER			Last SCL response sent back to the issuer of the suspend command
470	responses	set	STRING	none	%s	NUMBER			Last SCL response sent back to the issuer of the set command
471	responses	verbose	STRING	none	%s	NUMBER			Last SCL response sent back to the issuer of the verbose command
472	responses	quiet	STRING	none	%s	NUMBER			Last SCL response sent back to the issuer of the quiet command
473	responses	si_boresight	STRING	none	%s	NUMBER			Last SCL response sent back to the issuer of the si_boresight command
474	responses	mode	STRING	none	%s	NUMBER			Last SCL response sent back to the issuer of the mode command
475	responses	si_align	STRING	none	%s	NUMBER			Last SCL response sent back to the issuer of the si_align command
476	responses	sibs_change	STRING	none	%s	NUMBER			Last SCL response sent back to the issuer of the sibs_change command
477	responses	save	STRING	none	%s	NUMBER			Last SCL response sent back to the issuer of the save command
478	responses	restore	STRING	none	%s	NUMBER			Last SCL response sent back to the issuer of the restore command
479	rien_alert								Alert produced by the SI command handlers
480	rien_alert	rien_alert_info	STRING	none	%s	NUMBER			FYIs
481	rien_alert	rien_alert_warning	STRING	none	%s	NUMBER			TBD
482	rien_alert	rien_alert_error	STRING	none	%s	NUMBER			TBD
483	rien_alert	rien_alert_fatal	STRING	none	%s	NUMBER			TBD
484	rien_alarm								Alarm produced by the SI command handlers
485	rien_alarm	rien_alarm_info	STRING	none	%s	NUMBER			FYIs
486	rien_alarm_rien_alarm_info	tweak							
487	rien_alarm	rien_alarm_warning	STRING	none	%s	NUMBER			TBD

	A	B	C	D	E	F	G	H	I
488	rien_alarm	rien_alarm_error	STRING	none	%s	NUMBER			TBD
489	rien_alarm	rien_alarm_fatal	STRING	none	%s	NUMBER			TBD
490	oper_state		INT4	none	0x%2.2X	NUMBER			Operating state
491	si_align								Command defaults for the si_align command
492	si_align	first	VECTOR16		[%f %f]	NUMBER			First pixel location to move object to
493	si_align	second	VECTOR16		[%f %f]	NUMBER			Second pixel location to move object to
494	sibs_change								Command defaults for the sibs_change command
495	save								Housekeeping data for the save command
496	save	file	STRING	N/A	%s	NUMBER			Last file written by the save command
497	si_config								SI configuration for the current observing mode
498	si_config	current_mode	STRING		%s	ENUM			Current configuration mode for the SI(1: rien_mode_1), (2: rien_mode_2), (3: rien_mode_3), (4: rien_mode_4),
499	si_config	analog_chops	STRING		%s	NUMBER			Additional chop positions for the RIEN instrument
500	rien_mode_1								SI mounting and scaling data
501	rien_mode_1	rotation_si	FLOAT8	degrees	%lf	NUMBER	0	360	SI rotation relative to the mounting flange
502	rien_mode_1	ta_focus_position_si	FLOAT8	millimeters	%lf	NUMBER	-300	900	TA Focus position on the z axis of SIMFRF
503	rien_mode_1	x_scale_si	FLOAT8	arcseconds per millimeter	%lf	NUMBER			SI x-axis pixel scale factor
504	rien_mode_1	y_scale_si	FLOAT8	arcseconds per millimeter	%lf	NUMBER			SI y-axis pixel scale factor
505	rien_mode_1	x_sep_si	FLOAT8	millimeters	%lf	NUMBER			SI x-axis pixel separation (center to center)
506	rien_mode_1	y_sep_si	FLOAT8	millimeters	%lf	NUMBER			SI y-axis pixel separation (center to center)
507	rien_mode_1	x_pixel_min_si	INT4	pixels	%d	NUMBER			SI X-axis minimum pixel number
508	rien_mode_1	x_pixel_max_si	INT4	pixels	%d	NUMBER			SI X-axis maximum pixel number
509	rien_mode_1	x_pixel_boresight_si	FLOAT8	pixels	%lf	NUMBER	-1023	1024	Column of array in which lies the SI Boresight
510	rien_mode_1	x_pixel_origin_ta	FLOAT8	pixels	%lf	NUMBER			Column of array in which lies the TA optical axis
511	rien_mode_1	y_pixel_min_si	INT4	pixels	%d	NUMBER			SI Y-axis minimum pixel number
512	rien_mode_1	y_pixel_max_si	INT4	pixels	%d	NUMBER			SI Y-axis maximum pixel number
513	rien_mode_1	y_pixel_boresight_si	FLOAT8	pixels	%lf	NUMBER	-1023	1024	Row of array in which lies the SI Boresight
514	rien_mode_1	y_pixel_origin_ta	FLOAT8	pixels	%lf	NUMBER			Row of array in which lies the TA optical axis
515	rien_mode_1	x_bin	INT4	none	%d	NUMBER	1	4	The number of pixels to shift before each readout
516	rien_mode_1	y_bin	INT4	none	%d	NUMBER	1	5	The number of rows to shift between line reads
517	rien_mode_1	fpi	BOOL4		%s	ENUM			Focal Plane Imager present in light path(0: false), (1: true),
518	rien_mode_2								SI mounting and scaling data
519	rien_mode_2	rotation_si	FLOAT8	degrees	%lf	NUMBER	0	360	SI rotation relative to the mounting flange
520	rien_mode_2	ta_focus_position_si	FLOAT8	millimeters	%lf	NUMBER	-300	900	TA Focus position on the z axis of SIMFRF
521	rien_mode_2	x_scale_si	FLOAT8	arcseconds per millimeter	%lf	NUMBER			SI x-axis pixel scale factor

	A	B	C	D	E	F	G	H	I
522	rien_mode_2	y_scale_si	FLOAT8	arcseconds per millimeter	%lf	NUMBER			SI y-axis pixel scale factor
523	rien_mode_2	x_sep_si	FLOAT8	millimeters	%lf	NUMBER			SI x-axis pixel separation
524	rien_mode_2	y_sep_si	FLOAT8	millimeters	%lf	NUMBER			SI y-axis pixel separation
525	rien_mode_2	x_pixel_max_si	INT4	pixels	%d	NUMBER			SI X-axis maximum pixel number
526	rien_mode_2	x_pixel_min_si	INT4	pixels	%d	NUMBER			SI X-axis minimum pixel number
527	rien_mode_2	y_pixel_max_si	INT4	pixels	%d	NUMBER			SI Y-axis maximum pixel number
528	rien_mode_2	y_pixel_min_si	INT4	pixels	%d	NUMBER			SI X-axis minimum pixel number
529	rien_mode_2	x_pixel_boresight_si	FLOAT8	pixels	%lf	NUMBER	-1023	1024	Column of array in which lies the SI Boresight
530	rien_mode_2	y_pixel_boresight_si	FLOAT8	pixels	%lf	NUMBER	-1023	1024	Row of array in which lies the SI Boresight
531	rien_mode_2	x_pixel_origin_ta	FLOAT8	pixels	%lf	NUMBER			Column of array in which lies the TA optical axis
532	rien_mode_2	y_pixel_origin_ta	FLOAT8	pixels	%lf	NUMBER			Row of array in which lies the TA optical axis
533	rien_mode_2	x_bin	INT4	none	%d	NUMBER	1	4	The number of pixels to shift before each readout
534	rien_mode_2	y_bin	INT4	none	%d	NUMBER	1	5	The number of rows to shift between line reads
535	rien_mode_2	fpi	BOOL4		%s	ENUM			Focal Plane Imager present in light path(0: false), (1: true),
536	rien_mode_3								SI mounting and scaling data
537	rien_mode_3	rotation_si	FLOAT8	degrees	%lf	NUMBER	0	360	SI rotation relative to the mounting flange
538	rien_mode_3	ta_focus_position_si	FLOAT8	millimeters	%lf	NUMBER	-300	900	TA Focus position on the z axis of SIMFRF
539	rien_mode_3	x_scale_si	FLOAT8	arcseconds per millimeter	%lf	NUMBER			SI x-axis pixel scale factor
540	rien_mode_3	y_scale_si	FLOAT8	arcseconds per millimeter	%lf	NUMBER			SI y-axis pixel scale factor
541	rien_mode_3	x_sep_si	FLOAT8	millimeters	%lf	NUMBER			SI x-axis pixel separation
542	rien_mode_3	y_sep_si	FLOAT8	millimeters	%lf	NUMBER			SI y-axis pixel separation
543	rien_mode_3	x_pixel_max_si	INT4	pixels	%d	NUMBER			SI X-axis maximum pixel number
544	rien_mode_3	x_pixel_min_si	INT4	pixels	%d	NUMBER			SI X-axis minimum pixel number
545	rien_mode_3	y_pixel_max_si	INT4	pixels	%d	NUMBER			SI Y-axis maximum pixel number
546	rien_mode_3	y_pixel_min_si	INT4	pixels	%d	NUMBER			SI X-axis minimum pixel number
547	rien_mode_3	x_pixel_boresight_si	FLOAT8	pixels	%lf	NUMBER	-1023	1024	Column of array in which lies the SI Boresight
548	rien_mode_3	y_pixel_boresight_si	FLOAT8	pixels	%lf	NUMBER	-1023	1024	Row of array in which lies the SI Boresight
549	rien_mode_3	x_pixel_origin_ta	FLOAT8	pixels	%lf	NUMBER			Column of array in which lies the TA optical axis
550	rien_mode_3	y_pixel_origin_ta	FLOAT8	pixels	%lf	NUMBER			Row of array in which lies the TA optical axis
551	rien_mode_3	x_bin	INT4	none	%d	NUMBER	1	4	The number of pixels to shift before each readout
552	rien_mode_3	y_bin	INT4	none	%d	NUMBER	1	5	The number of rows to shift between line reads
553	rien_mode_3	fpi	BOOL4		%s	ENUM			Focal Plane Imager present in light path(0: false), (1: true),
554	rien_mode_4								SI mounting and scaling data
555	rien_mode_4	rotation_si	FLOAT8	degrees	%lf	NUMBER	0	360	SI rotation relative to the mounting flange

	A	B	C	D	E	F	G	H	I
556	rien_mode_4	ta_focus_position_si	FLOAT8	millimeters	%lf	NUMBER	-300	900	TA Focus position on the z axis of SIMFRF
557	rien_mode_4	x_scale_si	FLOAT8	arcseconds per millimeter	%lf	NUMBER			SI x-axis pixel scale factor
558	rien_mode_4	y_scale_si	FLOAT8	arcseconds per millimeter	%lf	NUMBER			SI y-axis pixel scale factor
559	rien_mode_4	x_sep_si	FLOAT8	millimeters	%lf	NUMBER			SI x-axis pixel separation
560	rien_mode_4	y_sep_si	FLOAT8	millimeters	%lf	NUMBER			SI y-axis pixel separation
561	rien_mode_4	x_pixel_max_si	INT4	pixels	%d	NUMBER			SI X-axis maximum pixel number
562	rien_mode_4	x_pixel_min_si	INT4	pixels	%d	NUMBER			SI X-axis minimum pixel number
563	rien_mode_4	y_pixel_max_si	INT4	pixels	%d	NUMBER			SI Y-axis maximum pixel number
564	rien_mode_4	y_pixel_min_si	INT4	pixels	%d	NUMBER			SI X-axis minimum pixel number
565	rien_mode_4	x_pixel_boresight_si	FLOAT8	pixels	%lf	NUMBER	-1023	1024	Column of array in which lies the SI Boresight
566	rien_mode_4	y_pixel_boresight_si	FLOAT8	pixels	%lf	NUMBER	-1023	1024	Row of array in which lies the SI Boresight
567	rien_mode_4	x_pixel_origin_ta	FLOAT8	pixels	%lf	NUMBER			Column of array in which lies the TA optical axis
568	rien_mode_4	y_pixel_origin_ta	FLOAT8	pixels	%lf	NUMBER			Row of array in which lies the TA optical axis
569	rien_mode_4	x_bin	INT4	none	%d	NUMBER	1	4	The number of pixels to shift before each readout
570	rien_mode_4	y_bin	INT4	none	%d	NUMBER	1	5	The number of rows to shift between line reads
571	rien_mode_4	fpi	BOOL4		%s	ENUM			Focal Plane Imager present in light path(0: false), (1: true),
572	**session** **User session data logged by default**								
573	**HK NAME**	**Name**	**Rep**	**Units**	**Format**	**Form**	**lo_lim**	**hi_lim**	**Description**
574	rcs_id		STRING	N/A	%s	NUMBER			Version information for the XML file that defines this data source
575	archive_info								Archive Info
576	archive_info	archive_status	BOOL4	none	%s	ENUM	0	1	(0: false), (1: true),
577	archive_info	current_bytes_archived	FLOAT8	none	%1f	NUMBER	0		Total bytes written to the current ark file
578	archive_info	total_bytes_archived	FLOAT8	none	%1f	NUMBER	0		Total bytes written since this data source starts
579	archive_info	archive_file_name	STRING	none	%s	NUMBER			Archive file name
580	archive_nsamples								Archive nth sample for data groups, the part before the _nsample must match the data group node name
581	archive_nsamples	current_bytes_archived_nsample	INT4	N/A	%d	NUMBER	0		
582	archive_nsamples	total_bytes_archived_nsample	INT4	N/A	%d	NUMBER	0		
583	commands		STRING	N/A	%s	NUMBER			Contains the last SCL command sent to the session
584	comment		STRING	N/A	%s	NUMBER			User comment
585	user_alerts								Alerts produced by a user session
586	user_alerts	user_alert_info	STRING	N/A	%s	NUMBER			TBD
587	user_alerts	user_alert_warning	STRING	N/A	%s	NUMBER			TBD
588	user_alerts	user_alert_error	STRING	N/A	%s	NUMBER			TBD
589	user_alerts	user_alert_fatal	STRING	N/A	%s	NUMBER			TBD

	A	B	C	D	E	F	G	H	I
590	user_alarms								Alarms produced by a user session
591	user_alarms	user_alarm_info	STRING	N/A	%s	NUMBER			TBD
592	user_alarms	user_alarm_warning	STRING	N/A	%s	NUMBER			TBD
593	user_alarms	user_alarm_error	STRING	N/A	%s	NUMBER			TBD
594	user_alarms	user_alarm_fatal	STRING	N/A	%s	NUMBER			TBD
595	user_environment								Environment used by any user of the MCS
596	user_environment	username	STRING	N/A	%s	NUMBER			User who owns this session
597	user_environment	role	STRING	N/A	%s	NUMBER			Role of this user
598	user_environment	logged_in	BOOL4	N/A	%s	NUMBER	0	1	Whether or not this user is logged in.(0: no), (1: yes),
599	user_environment	showlabels	BOOL4	N/A	%s	NUMBER	0	1	Whether or not labels are displayed in responses (global).(0: no), (1: yes),
600	user_environment	showunits	BOOL4	N/A	%s	NUMBER	0	1	Whether or not units are displayed in responses (global).(0: no), (1: yes),
601	user_environment	attr	STRING	N/A	%s	NUMBER			Global attributes
602	user_environment	logpath	STRING	N/A	%s	NUMBER			Log path
603	user_environment	pid	INT4	N/A	%d	NUMBER			Process ID for this session
604	user_environment	host	STRING	N/A	%s	NUMBER			Hostname for this session
605	user_environment	new_data_source	STRING	N/A	%s	NUMBER			Last data source this session received notification for
606	user_environment	resp_format	STRING	N/A	%s	ENUM			Specifies output format for SI04 responses (valid values are: LEGACY, BINARY, FORMATTED)(0: legacy), (1: binary), (2: formatted),
607	user_environment	verbose	STRING	N/A	%s	NUMBER			Verbosity level(0: none), (1: normal), (2: all),
608	user_environment	session_name	STRING	N/A	%s	NUMBER			Assigned name for this session
609	user_environment	mission_id	STRING	N/A	%s	NUMBER			Mission ID of FLT
610	dropped_responses		FLOAT8	percent	%lf	NUMBER			The fraction of intermediate responses that are dropped
611	**sma** **Data produced by sma Commandable**								
612	**HK NAME**	**Name**	**Rep**	**Units**	**Format**	**Form**	**lo_lim**	**hi_lim**	**Description**
613	rcs_id		STRING	N/A	%s	NUMBER			Version information for the XML file that defines this data source
614	archive_info								Archive Info
615	archive_info	archive_status	BOOL4	N/A	%s	ENUM	0	1	(0: false), (1: true),
616	archive_info	current_bytes_archived	FLOAT8	none	%1f	NUMBER	0		Total bytes written to the current ark file
617	archive_info	total_bytes_archived	FLOAT8	none	%1f	NUMBER	0		Total bytes written since this data source starts
618	archive_info	archive_file_name	STRING	N/A	%s	NUMBER			Archive file name
619	archive_nsamples								Archive nth sample for data groups, the part before the _nsample must match the data group node name
620	archive_nsamples	current_bytes_archived_nsample	INT4	N/A	%d	NUMBER	0		
621	archive_nsamples	total_bytes_archived_nsample	INT4	N/A	%d	NUMBER	0		
622	commands		STRING	N/A	%s	NUMBER			Contains the last SCL command sent to sma
623	responses								Contains SCL responses for sma commands
624	responses	resume	STRING	N/A	%s	NUMBER			Last SCL response sent back to the issuer of the resume command
625	responses	suspend	STRING	N/A	%s	NUMBER			Last SCL response sent back to the issuer of the suspend command
626	responses	set	STRING	N/A	%s	NUMBER			Last SCL response sent back to the issuer of the set command

	A	B	C	D	E	F	G	H	I
627	responses	verbose	STRING	N/A	%s	NUMBER			Last SCL response sent back to the issuer of the verbose command
628	responses	quiet	STRING	N/A	%s	NUMBER			Last SCL response sent back to the issuer of the quiet command
629	responses	init	STRING	N/A	%s	NUMBER			Last SCL response sent back to the issuer of the init command
630	responses	focus	STRING	N/A	%s	NUMBER			Last SCL response sent back to the issuer of the focus command
631	responses	position	STRING	N/A	%s	NUMBER			Last SCL response sent back to the issuer of the position command
632	responses	calibrate	STRING	N/A	%s	NUMBER			Last SCL response sent back to the issuer of the calibrate command
633	responses	calculate	STRING	N/A	%s	NUMBER			Last SCL response sent back to the issuer of the calculate command
634	responses	finished	STRING	N/A	%s	NUMBER			Last SCL response sent back to the issuer of the finished command
635	responses	measure	STRING	N/A	%s	NUMBER			Last SCL response sent back to the issuer of the measure command
636	responses	chop	STRING	N/A	%s	NUMBER			Last SCL response sent back to the issuer of the chop command
637	responses	align	STRING	N/A	%s	NUMBER			Last SCL response sent back to the issuer of the align command
638	responses	stop	STRING	N/A	%s	NUMBER			Last SCL response sent back to the issuer of the stop command
639	responses	park	STRING	N/A	%s	NUMBER			Last SCL response sent back to the issuer of the park command
640	responses	save	STRING	N/A	%s	NUMBER			Last SCL response sent back to the issuer of the save command
641	responses	restore	STRING	N/A	%s	NUMBER			Last SCL response sent back to the issuer of the restore command
642	sma_alert								Alert produced by the Sma Commandable
643	sma_alert	sma_alert_info	STRING		%s	NUMBER			Informational messages (events)
644	sma_alert	sma_alert_warning	STRING		%s	NUMBER			Events requiring user action for recovery
645	sma_alert	sma_alert_error	STRING		%s	NUMBER			Non-recoverable problems which are not fatal
646	sma_alert	sma_alert_fatal	STRING		%s	NUMBER			Fatal problems
647	sma_alarm								Alarm produced by the Sma Commandable
648	sma_alarm	sma_alarm_info	STRING		%s	NUMBER			Normal events requiring user confirmation
649	sma_alarm_sma_alarm_info	park							
650	sma_alarm_sma_alarm_info	redefine							
651	sma_alarm_sma_alarm_info	create							
652	sma_alarm	sma_alarm_warning	STRING		%s	NUMBER			Abnormal events requiring user confirmation
653	sma_alarm	sma_alarm_error	STRING		%s	NUMBER			Serious problems requiring user confirmation
654	sma_alarm	sma_alarm_fatal	STRING		%s	NUMBER			Fatal problems requiring user confirmation
655	a_chop_amp		FLOAT8	N/A	%lf	NUMBER	0.5	2	Scale value for amplitude
656	delta_angle		FLOAT8	degrees	%lf	NUMBER	-180	180	Misalignment in angle
657	sma_state		INT4		%d	ENUM			Simplification of ta_sma.scs_composite_status.scs_state_status(0: EXTERNAL_POWER), (1: INITIALIZED), (2: READY_OPEN_LOOP), (3: READY_CLOSED_LOOP), (4: PARKED), (5: FAILED),
658	calibrated		BOOL4	N/A	%s	NUMBER	0	1	Has chopping been calibrated?
659	a_chop_angle		FLOAT8	N/A	%lf	NUMBER	0.5	2	Scale value for angle
660	delta_amp		FLOAT8	arcseconds	%lf	NUMBER	-1125	1125	Misalignment in amplitude
661	a_chop_offset		FLOAT8	N/A	%lf	NUMBER	0.5	2	Scale value for offset
662	delta_offset		VECTOR16	arcseconds	%lf	NUMBER	-1125	1125	Misalignment in offset
663	chop_amp_scale		FLOAT8	N/A	%lf	NUMBER			Scale value for chop amplitude to sky

	A	B	C	D	E	F	G	H	I
664	fcm_offset_scale		FLOAT8	arcseconds per micron	%lf	NUMBER			Scale value for FCM offsets to sky
665	sky_amplitude		FLOAT8	arcseconds	%lf	NUMBER	-1125	1125	Calculated amplitude on the sky
666	sky_amp2		FLOAT8	arcseconds	%lf	NUMBER	-1125	1125	Calculated second amplitude on the sky
667	sky_tip		FLOAT8	arcseconds	%lf	NUMBER	-1125	1125	Calculated tip in the sky_coord_sys reference frame
668	sky_tilt		FLOAT8	arcseconds	%lf	NUMBER	-1125	1125	Calculated tilt in the sky_coord_sys reference frame
669	sky_angle		FLOAT8	degrees	%lf	NUMBER	-180	180	Calculated angle in the sky_coord_sys reference frame
670	sky_coord_sys		STRING	N/A	%s	ENUM			Reference frame for which MCCS computes SMA parameters
671	points								SMA chop points
672	points	plus							Individual chop point
673	points_plus	delta_ra	FLOAT8	sidereal hours	%lf	NUMBER			Delta Right Ascension for the plus beam
674	points_plus	delta_dec	FLOAT8	degrees	%lf	NUMBER			Delta declination for the plus beam
675	points_plus	delta_el	FLOAT8	degrees	%lf	NUMBER			Change in fine-drive elevation for the plus beam
676	points_plus	delta_xel	FLOAT8	degrees	%lf	NUMBER			Change in fine-drive cross-elevation for the plus beam
677	points_plus	delta_xsi	FLOAT8	pixels	%lf	NUMBER			Change in SI x-pixels for the plus beam
678	points_plus	delta_ysi	FLOAT8	pixels	%lf	NUMBER			Change in SI y-pixels for the plus beam
679	points_plus	delta_xfpi	FLOAT8	pixels	%lf	NUMBER			Change in FPI X-pixels for the plus beam
680	points_plus	delta_yfpi	FLOAT8	pixels	%lf	NUMBER			Change in FPI Y-pixels for the plus beam
681	points_plus	delta_xffi	FLOAT8	pixels	%lf	NUMBER			Change in FFI X-pixels for the plus beam
682	points_plus	delta_yffi	FLOAT8	pixels	%lf	NUMBER			Change in FFI Y-pixels for the plus beam
683	points_plus	delta_xwfi	FLOAT8	pixels	%lf	NUMBER			Change in WFI X-pixels for the plus beam
684	points_plus	delta_ywfi	FLOAT8	pixels	%lf	NUMBER			Change in WFI Y-pixels for the plus beam
685	points	minus							Individual chop point
686	points_minus	delta_ra	FLOAT8	sidereal hours	%lf	NUMBER			Delta Right Ascension for the minus beam
687	points_minus	delta_dec	FLOAT8	degrees	%lf	NUMBER			Delta declination for the minus beam
688	points_minus	delta_el	FLOAT8	degrees	%lf	NUMBER			Change in fine-drive elevation for the minus beam
689	points_minus	delta_xel	FLOAT8	degrees	%lf	NUMBER			Change in fine-drive cross-elevation for the minus beam
690	points_minus	delta_xsi	FLOAT8	pixels	%lf	NUMBER			Change in SI x-pixels for the minus beam
691	points_minus	delta_ysi	FLOAT8	pixels	%lf	NUMBER			Change in SI y-pixels for the minus beam
692	points_minus	delta_xfpi	FLOAT8	pixels	%lf	NUMBER			Change in FPI X-pixels for the minus beam
693	points_minus	delta_yfpi	FLOAT8	pixels	%lf	NUMBER			Change in FPI Y-pixels for the minus beam
694	points_minus	delta_xffi	FLOAT8	pixels	%lf	NUMBER			Change in FFI X-pixels for the minus beam
695	points_minus	delta_yffi	FLOAT8	pixels	%lf	NUMBER			Change in FFI Y-pixels for the minus beam
696	points_minus	delta_xwfi	FLOAT8	pixels	%lf	NUMBER			Change in WFI X-pixels for the minus beam
697	points_minus	delta_ywfi	FLOAT8	pixels	%lf	NUMBER			Change in WFI Y-pixels for the minus beam
698	position								user-settable defaults for the sma.position command
699	position	r	FLOAT8	micrometers	%lf	NUMBER	-5000	5000	Last (and default) R offset for the sma.position command

	A	B	C	D	E	F	G	H	I
700	position	s	FLOAT8	micrometers	%lf	NUMBER	-5000	5000	Last (and default) S offset for the sma.position command
701	position	tip	FLOAT8	arcseconds	%lf	NUMBER	-1800	1800	Last (and default) tip for the sma.position command
702	position	tilt	FLOAT8	arcseconds	%lf	NUMBER	-1800	1800	Last (and default) tilt for the sma.position command
703	chop								user-settable defaults for the sma.chop command
704	chop	frequency	FLOAT8	hertz	%lf	NUMBER	0	20	User-supplied frequency for the sma.chop command
705	chop	settling_time	FLOAT8	milliseconds	%lf	NUMBER	0	100	User-supplied settling time for the sma.chop command
706	chop	user_amplitude	FLOAT8	arcseconds	%lf	NUMBER	-1125	1125	User-supplied amplitude for the sma.chop command
707	chop	user_amp2	FLOAT8	arcseconds	%lf	NUMBER	-1125	1125	User-supplied second amplitude for the sma.chop command
708	chop	profile	UINT4	N/A	%d	NUMBER	0		User-supplied profile for the sma.chop command
709	chop	user_tip	FLOAT8	arcseconds	%lf	NUMBER	-1125	1125	User-supplied tip center for the sma.chop command
710	chop	user_tilt	FLOAT8	arcseconds	%lf	NUMBER	-1125	1125	User-supplied tilt center for the sma.chop command
711	chop	user_angle	FLOAT8	degrees	%lf	NUMBER	-180	180	User-supplied angle for the sma.chop command
712	chop	pos_ang	FLOAT8	degrees	%lf	NUMBER	-180	180	User-supplied angle for the sma.chop command
713	chop	coord_sys	STRING	N/A	%s	ENUM			User-supplied coordinate system for the sma.chop command(10: erf), (11: sirf), (12: wfirf), (13: ffirf), (14: fpirf),
714	chop	phase	FLOAT8	milliseconds	%lf	NUMBER	0	1000	User-supplied phase for the sma.chop command
715	chop	sync_src	STRING		%s	ENUM			User-supplied synchronization source for the sma.chop command(0: internal), (1: external), (3: analog),
716	stop								user-settable defaults for the sma.stop command
717	stop	at_pos	STRING		%s	ENUM			Last (and default) position for the sma.stop command(0: now), (1: no_chop), (2: zero), (3: plus), (4: minus),
718	focus								user-settable defaults for the sma.focus command
719	focus	position	FLOAT8	micrometers	%lf	NUMBER	-5000	5000	Last (and default) T position for the sma.focus command
720	focus	delta	FLOAT8	micrometers	%lf	NUMBER	-5000	5000	Accumulated focus shift due to temperature
721	focus	zero	FLOAT8	micrometers	%lf	NUMBER	-5000	5000	Base position for the current instrument mode
722	focus	mode	STRING	N/A	%s	NUMBER			Instrument mode assumed by focus
723	collimation_r		FLOAT8	arcseconds	%lf	NUMBER	-1800	1800	The FCM collimation setting for R
724	collimation_s		FLOAT8	arcseconds	%lf	NUMBER	-1800	1800	The FCM collimation setting for S
725	collimation_tip		FLOAT8	arcseconds	%lf	NUMBER	-1800	1800	The FCM collimation setting for tip
726	collimation_tilt		FLOAT8	arcseconds	%lf	NUMBER	-1800	1800	The FCM collimation setting for tilt
727	save								user-settable defaults for the sma.save command
728	save	action	STRING	N/A	%s	ENUM			Default action if new argument is wrong(-1: error), (0: ignore), (1: query),

	A	B	C	D	E	F	G	H	I
729	save	file	STRING	N/A	%s	NUMBER			Last file written by the save command
730	oper_state		INT4	N/A	0x%2.2X	NUMBER			Operating state
731	update_rate		FLOAT8	hertz	%f	NUMBER	1	500	periodic activity rate
732	**ta Telescope Assembly (TA) Commandable**								
733	**HK NAME**	**Name**	**Rep**	**Units**	**Format**	**Form**	**lo_lim**	**hi_lim**	**Description**
734	rcs_id		STRING	none	%s	NUMBER			Version information for the XML file that defines this data source
735	archive_info								Archive Info
736	archive_info	archive_status	BOOL4	none	%s	ENUM	0	1	(0: false), (1: true),
737	archive_info	current_bytes_archived	FLOAT8	none	%1f	NUMBER	0		Total bytes written to the current ark file
738	archive_info	total_bytes_archived	FLOAT8	none	%1f	NUMBER	0		Total bytes written since this data source starts
739	archive_info	archive_file_name	STRING	none	%s	NUMBER			Archive file name
740	archive_nsamples								Archive nth sample for data groups, the part before the _nsample must match the data group node name
741	archive_nsamples	current_bytes_archived_nsample	INT4	N/A	%d	NUMBER	0		
742	archive_nsamples	total_bytes_archived_nsample	INT4	N/A	%d	NUMBER	0		
743	commands		STRING	none	%s	NUMBER			Contains the last SCL command sent to the ta commandable
744	responses								Contains SCL responses for TA commands
745	responses	poll	STRING	none	%s	NUMBER			Last SCL response sent back to the issuer of the poll command
746	responses	cmd_timeout	STRING	none	%s	NUMBER			Last SCL response sent back to the issuer of the cmd_timeout command
747	ta_alert								Alert produced by the TA interface
748	ta_alert	ta_alert_info	STRING	none	%s	NUMBER			Information alert
749	ta_alert	ta_alert_warning	STRING	none	%s	NUMBER			Warning alert
750	ta_alert	ta_alert_error	STRING	none	%s	NUMBER			Error alert
751	ta_alert	ta_alert_fatal	STRING	none	%s	NUMBER			Fatal alert
752	ta_alarm								Alarm produced by the TA interface
753	ta_alarm	ta_alarm_info	STRING	none	%s	NUMBER			Information alarm
754	ta_alarm	ta_alarm_warning	STRING	none	%s	NUMBER			Warning alarm
755	ta_alarm	ta_alarm_error	STRING	none	%s	NUMBER			Error alarm
756	ta_alarm	ta_alarm_fatal	STRING	none	%s	NUMBER			Fatal alarm
757	**ta_ffi Fine Field Imager (FFI) data**								
758	**HK NAME**	**Name**	**Rep**	**Units**	**Format**	**Form**	**lo_lim**	**hi_lim**	**Description**
759	rcs_id		STRING	N/A	%s	NUMBER			Version information for the XML file that defines this data source
760	archive_info								Archive Info
761	archive_info	archive_status	BOOL4	N/A	%s	ENUM	0	1	(0: false), (1: true),
762	archive_info	current_bytes_archived	FLOAT8	N/A	%1f	NUMBER	0		Total bytes written to the current ark file
763	archive_info	total_bytes_archived	FLOAT8	N/A	%1f	NUMBER	0		Total bytes written since this data source starts
764	archive_info	archive_file_name	STRING	N/A	%s	NUMBER			Archive file name
765	archive_nsamples								Archive nth sample for data groups, the part before the _nsample must match the data group node name

	A	B	C	D	E	F	G	H	I
766	archive_nsamples	current_bytes_archived_nsample	INT4	N/A	%d	NUMBER	0		
767	archive_nsamples	total_bytes_archived_nsample	INT4	N/A	%d	NUMBER	0		
768	commands		STRING	N/A	%s	NUMBER			Contains the last SCL command sent to the ta_ffi commandable
769	responses								Contains SCL responses for TA FFI commands
770	responses	debug	STRING	N/A	%s	NUMBER			Last SCL response sent back to the issuer of the debug command
771	responses	show_test_images	STRING	N/A	%s	NUMBER			Last SCL response sent back to the issuer of the show_test_images command
772	responses	retransmit_packets	STRING	N/A	%s	NUMBER			Last SCL response sent back to the issuer of the retransmit_packets command
773	responses	scaling_range	STRING	N/A	%s	NUMBER			Last SCL response sent back to the issuer of the scaling_range command
774	responses	log	STRING	N/A	%s	NUMBER			Last SCL response sent back to the issuer of the log command
775	responses	image_to_hk	STRING	N/A	%s	NUMBER			Last SCL response sent back to the issuer of the image_to_hk command
776	ta_ffi_alert								Alerts produced by the TA Wide Field Imager
777	ta_ffi_alert	ta_ffi_alert_info	STRING	N/A	%s	NUMBER			Information alert
778	ta_ffi_alert	ta_ffi_alert_warning	STRING	N/A	%s	NUMBER			Warning alert
779	ta_ffi_alert	ta_ffi_alert_error	STRING	N/A	%s	NUMBER			Error alert
780	ta_ffi_alert	ta_ffi_alert_fatal	STRING	N/A	%s	NUMBER			Fatal alert
781	ta_ffi_alarm								Alarms produced by the TA Wide Field Imager
782	ta_ffi_alarm	ta_ffi_alarm_info	STRING	N/A	%s	NUMBER			Information alarm
783	ta_ffi_alarm	ta_ffi_alarm_warning	STRING	N/A	%s	NUMBER			Warning alarm
784	ta_ffi_alarm	ta_ffi_alarm_error	STRING	N/A	%s	NUMBER			Error alarm
785	ta_ffi_alarm	ta_ffi_alarm_fatal	STRING	N/A	%s	NUMBER			Fatal alarm
786	ccd_image_data								Imager housekeeping data
787	ccd_image_data	packet	BINARY	N/A	%s	NUMBER	N/A	N/A	data packet as it was received from the TA
788	ccd_image_data	pkt_timestamp	TIME8	seconds	%d.%09d	NUMBER	0	2147483647	time data packet was constructed by TA
789	ccd_image_data	image_type	INT4	N/A	%d	ENUM	0	3	Indicates whether the data block is a CCD image, a darkfield image or a flatfield image(0: CCD_IMAGE), (1: FLATFIELD), (2: DARKFIELD), (3: TEST),
790	ccd_image_data	image_sn	INT4	N/A	%d	NUMBER	10000	39999	Unique identity of the image, with ranges as follows: WFI: 10000...19999, FFI: 20000...29999, FPI: 30000...39999
791	ccd_image_data	image_use	INT4	N/A	%d	ENUM	1	4	Reports how the image is used(1: MONITOR), (2: NORMAL), (3: DARK_ACQUISITION), (4: TEST),
792	ccd_image_data	image_size_transfer	INT4	N/A	%d	NUMBER	0	2147483647	Image size (in Bytes) of current image
793	ccd_image_data	exposure_start_time	TIME8	seconds	%d.%09d	NUMBER	0	2147483647	Start time of exposure
794	ccd_image_data	exposure_duration	INT4	milliseconds	%d	NUMBER	10	10000	Duration of exposure period
795	ccd_image_data	pixel_grouping	INT4	N/A	%d	ENUM	0	2	Pixel grouping of the current image(0: 1x1), (1: 2x2), (2: 4x4),
796	ccd_image_data	pixel_format	INT4	N/A	%d	ENUM	0	1	Pixel format of current image(0: 8_BIT), (1: 14_BIT),
797	ccd_image_data	filter_position	INT4	N/A	%d	ENUM	-1	6	Filter position(-1: UNDEFINED), (0: HOME), (1: CLOSED), (2: FILTER_1), (3: FILTER_2), (4: FILTER_3), (5: FILTER_4), (6: FILTER_5),

	A	B	C	D	E	F	G	H	I
798	ccd_image_data	focus_position	FLOAT4	millimeters	%f	NUMBER	0	600	Focus position. Only valid for FPI.
799	ccd_image_data	focal_length	FLOAT4	millimeters	%f	NUMBER	100	100000	Focal length of camera optics
800	ccd_image_data	reticle	FLOAT4	N/A	%f	NUMBER	0	1	Reticle brightness. Only valid for FPI.
801	ccd_image_data	pixel_n	BINARY	N/A	%u	NUMBER	N/A	N/A	Image pixel data. Each pixel is two bytes in size, so if the pixel_format is defined to be 14 bit, the two high bits (14 and 15) are always 0, whereas if the pixel_format is defined to be 8 bit, the high byte is filled with 0s. Also, for any given data packet, there are n pixels, i.e., the image size (see image_size_transfer) may vary with every packet.
802	fits_data								Imager housekeeping data in the FITS format
803	fits_data	fits	BINARY	N/A	%s	NUMBER	N/A	N/A	Contains the FITS image data (ASCII header followed by the image data in binary)
804	**ta_fpi** **Focal Plane Imager (FPI) data**								
805	**HK NAME**	**Name**	**Rep**	**Units**	**Format**	**Form**	**lo_lim**	**hi_lim**	**Description**
806	rcs_id		STRING	N/A	%s	NUMBER			Version information for the XML file that defines this data source
807	archive_info								Archive Info
808	archive_info	archive_status	BOOL4	N/A	%s	ENUM	0	1	(0: false), (1: true),
809	archive_info	current_bytes_archived	FLOAT8	N/A	%1f	NUMBER	0		Total bytes written to the current ark file
810	archive_info	total_bytes_archived	FLOAT8	N/A	%1f	NUMBER	0		Total bytes written since this data source starts
811	archive_info	archive_file_name	STRING	N/A	%s	NUMBER			Archive file name
812	archive_nsamples								Archive nth sample for data groups, the part before the _nsample must match the data group node name
813	archive_nsamples	current_bytes_archived_nsample	INT4	N/A	%d	NUMBER	0		
814	archive_nsamples	total_bytes_archived_nsample	INT4	N/A	%d	NUMBER	0		
815	commands		STRING	N/A	%s	NUMBER			Contains the last SCL command sent to the ta_fpi commandable
816	responses								Contains SCL responses for TA FPI commands
817	responses	debug	STRING	N/A	%s	NUMBER			Last SCL response sent back to the issuer of the debug command
818	responses	show_test_images	STRING	N/A	%s	NUMBER			Last SCL response sent back to the issuer of the show_test_images command
819	responses	retransmit_packets	STRING	N/A	%s	NUMBER			Last SCL response sent back to the issuer of the retransmit_packets command
820	responses	scaling_range	STRING	N/A	%s	NUMBER			Last SCL response sent back to the issuer of the scaling_range command
821	responses	log	STRING	N/A	%s	NUMBER			Last SCL response sent back to the issuer of the log command
822	responses	image_to_hk	STRING	N/A	%s	NUMBER			Last SCL response sent back to the issuer of the image_to_hk command
823	ta_fpi_alert								Alerts produced by the TA Wide Field Imager
824	ta_fpi_alert	ta_fpi_alert_info	STRING	N/A	%s	NUMBER			Information alert
825	ta_fpi_alert	ta_fpi_alert_warning	STRING	N/A	%s	NUMBER			Warning alert
826	ta_fpi_alert	ta_fpi_alert_error	STRING	N/A	%s	NUMBER			Error alert
827	ta_fpi_alert	ta_fpi_alert_fatal	STRING	N/A	%s	NUMBER			Fatal alert
828	ta_fpi_alarm								Alarms produced by the TA Wide Field Imager

	A	B	C	D	E	F	G	H	I
829	ta_fpi_alarm	ta_fpi_alarm_info	STRING	N/A	%s	NUMBER			Information alarm
830	ta_fpi_alarm	ta_fpi_alarm_warning	STRING	N/A	%s	NUMBER			Warning alarm
831	ta_fpi_alarm	ta_fpi_alarm_error	STRING	N/A	%s	NUMBER			Error alarm
832	ta_fpi_alarm	ta_fpi_alarm_fatal	STRING	N/A	%s	NUMBER			Fatal alarm
833	ccd_image_data								Imager housekeeping data
834	ccd_image_data	packet	BINARY	N/A	%s	NUMBER	N/A	N/A	data packet as it was received from the TA
835	ccd_image_data	pkt_timestamp	TIME8	seconds	%d.%09d	NUMBER	0	2147483647	time data packet was constructed by TA
836	ccd_image_data	image_type	INT4	N/A	%d	ENUM	0	3	Indicates whether the data block is a CCD image, a darkfield image or a flatfield image(0: CCD_IMAGE), (1: FLATFIELD), (2: DARKFIELD), (3: TEST),
837	ccd_image_data	image_sn	INT4	N/A	%d	NUMBER	10000	39999	Unique identity of the image, with ranges as follows: WFI: 10000...19999, FFI: 20000...29999, FPI: 30000...39999
838	ccd_image_data	image_use	INT4	N/A	%d	ENUM	1	4	Reports how the image is used(1: MONITOR), (2: NORMAL), (3: DARK_ACQUISITION), (4: TEST),
839	ccd_image_data	image_size_transfer	INT4	N/A	%d	NUMBER	0	2147483647	Image size (in Bytes) of current image
840	ccd_image_data	exposure_start_time	TIME8	seconds	%d.%09d	NUMBER	0	2147483647	Start time of exposure
841	ccd_image_data	exposure_duration	INT4	milliseconds	%d	NUMBER	10	10000	Duration of exposure period
842	ccd_image_data	pixel_grouping	INT4	N/A	%d	ENUM	0	2	Pixel grouping of the current image(0: 1x1), (1: 2x2), (2: 4x4),
843	ccd_image_data	pixel_format	INT4	N/A	%d	ENUM	0	1	Pixel format of current image(0: 8_BIT), (1: 14_BIT),
844	ccd_image_data	filter_position	INT4	N/A	%d	ENUM	-1	6	Filter position(-1: UNDEFINED), (0: HOME), (1: CLOSED), (2: FILTER_1), (3: FILTER_2), (4: FILTER_3), (5: FILTER_4), (6: FILTER_5),
845	ccd_image_data	focus_position	FLOAT4	millimeters	%f	NUMBER	-300	300	Focus position. Only valid for FPI.
846	ccd_image_data	focal_length	FLOAT4	millimeters	%f	NUMBER	100	100000	Focal length of camera optics
847	ccd_image_data	reticle	FLOAT4	N/A	%f	NUMBER	0	1	Reticle brightness. Only valid for FPI.
848	ccd_image_data	pixel_n	BINARY	N/A	%u	NUMBER	N/A	N/A	Image pixel data. Each pixel is two bytes in size, so if the pixel_format is defined to be 14 bit, the two high bits (14 and 15) are always 0, whereas if the pixel_format is defined to be 8 bit, the high byte is filled with 0s. Also, for any given data packet, there are n pixels, i.e., the image size (see image_size_transfer) may vary with every packet.
849	fits_data								Imager housekeeping data in the FITS format
850	fits_data	fits	BINARY	N/A	%s	NUMBER	N/A	N/A	Contains the FITS image data (ASCII header followed by the image data in binary)
851	**ta_mcp** **TA Master Control Processor (MCP) data**								
852	**HK NAME**	**Name**	**Rep**	**Units**	**Format**	**Form**	**lo_lim**	**hi_lim**	**Description**
853	rcs_id		STRING	N/A	%s	NUMBER			Version information for the XML file that defines this data source
854	archive_info								Archive Info
855	archive_info	archive_status	BOOL4	N/A	%s	ENUM	0	1	(0: false), (1: true),
856	archive_info	current_bytes_archived	FLOAT8	N/A	%1f	NUMBER	0		Total bytes written to the current ark file
857	archive_info	total_bytes_archived	FLOAT8	N/A	%1f	NUMBER	0		Total bytes written since this data source starts
858	archive_info	archive_file_name	STRING	N/A	%s	NUMBER			Archive file name

	A	B	C	D	E	F	G	H	I
859	archive_nsamples								Archive nth sample for data groups, the part before the _nsample must match the data group node name
860	archive_nsamples	current_bytes_archived_nsample	INT4	N/A	%d	NUMBER	0		
861	archive_nsamples	total_bytes_archived_nsample	INT4	N/A	%d	NUMBER	0		
862	archive_nsamples	mcp_hk_states_nsample	INT4	N/A	%d	NUMBER	0		
863	archive_nsamples	mcp_hk_pms_nsample	INT4	N/A	%d	NUMBER	0		
864	archive_nsamples	mcp_hk_pwc_nsample	INT4	N/A	%d	NUMBER	0		
865	archive_nsamples	mcp_hk_pdu_nsample	INT4	N/A	%d	NUMBER	0		
866	archive_nsamples	mcp_hk_anu_nsample	INT4	N/A	%d	NUMBER	0		
867	commands		STRING	N/A	%s	NUMBER			Contains the last SCL command sent to the MCP
868	responses								Contains SCL responses for MCP commands
869	responses	mcp_pwc_gate_valve_open	STRING	N/A	%s	NUMBER			Last SCL response sent back to the issuer of the mcp_pwc_gate_valve_open command
870	responses	mcp_pwc_gate_valve_close	STRING	N/A	%s	NUMBER			Last SCL response sent back to the issuer of the mcp_pwc_gate_valve_close command
871	responses	mcp_pdu_switch	STRING	N/A	%s	NUMBER			Last SCL response sent back to the issuer of the mcp_pdu_switch command
872	responses	mcp_ta_switch_off	STRING	N/A	%s	NUMBER			Last SCL response sent back to the issuer of the mcp_ta_switch_off command
873	responses	mcp_hk_rate	STRING	N/A	%s	NUMBER			Last SCL response sent back to the issuer of the mcp_hk_rate command
874	responses	mcp_tsc_hk_rate	STRING	N/A	%s	NUMBER			Last SCL response sent back to the issuer of the mcp_tsc_hk_rate command
875	responses	mcp_set_hk_limits	STRING	N/A	%s	NUMBER			Last SCL response sent back to the issuer of the mcp_set_hk_limits command
876	responses	mcp_annunciator_confirm	STRING	N/A	%s	NUMBER			Last SCL response sent back to the issuer of the mcp_annunciator_confirm command
877	responses	mcp_annunciator_test	STRING	N/A	%s	NUMBER			Last SCL response sent back to the issuer of the mcp_annunciator_test command
878	responses	mcp_built_in_test	STRING	N/A	%s	NUMBER			Last SCL response sent back to the issuer of the mcp_built_in_test command
879	responses	mcp_sw_version	STRING	N/A	%s	NUMBER			Last SCL response sent back to the issuer of the mcp_sw_version command
880	responses	mcp_image_quality_compensation	STRING	N/A	%s	NUMBER			Last SCL response sent back to the issuer of the mcp_image_quality_compensation command
881	responses	mcp_image_qc_init	STRING	N/A	%s	NUMBER			Last SCL response sent back to the issuer of the mcp_image_qc_init command
882	responses	mcp_test_command	STRING	N/A	%s	NUMBER			Last SCL response sent back to the issuer of the mcp_test_command command
883	responses	send_packet	STRING	N/A	%s	NUMBER			Last SCL response sent back to the issuer of the send_packet command
884	responses	mcp_config_set	STRING	N/A	%s	NUMBER			Last SCL response sent back to the issuer of the mcp_config_set command
885	responses	mcp_config_save	STRING	N/A	%s	NUMBER			Last SCL response sent back to the issuer of the mcp_config_save command
886	responses	mcp_config_load	STRING	N/A	%s	NUMBER			Last SCL response sent back to the issuer of the mcp_config_load command

	A	B	C	D	E	F	G	H	I
887	responses	mcp_config_get	STRING	N/A	%s	NUMBER			Last SCL response sent back to the issuer of the mcp_config_get command
888	ta_mcp_alert								Alerts produced by the TA Master Control Processor
889	ta_mcp_alert	ta_mcp_alert_info	STRING	N/A	%s	NUMBER			Information alert
890	ta_mcp_alert	ta_mcp_alert_warning	STRING	N/A	%s	NUMBER			Warning alert
891	ta_mcp_alert	ta_mcp_alert_error	STRING	N/A	%s	NUMBER			Error alert
892	ta_mcp_alert	ta_mcp_alert_fatal	STRING	N/A	%s	NUMBER			Fatal alert
893	ta_mcp_alarm								Alarms produced by the TA Master Control Processor
894	ta_mcp_alarm	ta_mcp_alarm_info	STRING	N/A	%s	NUMBER			Information alarm
895	ta_mcp_alarm	ta_mcp_alarm_warning	STRING	N/A	%s	NUMBER			Warning alarm
896	ta_mcp_alarm	ta_mcp_alarm_error	STRING	N/A	%s	NUMBER			Error alarm
897	ta_mcp_alarm	ta_mcp_alarm_fatal	STRING	N/A	%s	NUMBER			Fatal alarm
898	mcp_limit_transition								parameter limit has been exceeded
899	mcp_limit_transition	packet	BINARY	N/A	%s	NUMBER			data packet as it was received from the TA
900	mcp_limit_transition	pkt_timestamp	TIME8	seconds	%d.%09d	NUMBER	0	2147483647	time data packet was constructed by TA
901	mcp_limit_transition	timestamp	TIME8	seconds	%d.%09d	NUMBER	0	2147483647	time at which the event happened or was captured
902	mcp_limit_transition	mcp_indicator_id	UINT4	N/A	%u	ENUM	1	40	annunciator lamp to be illuminated(1: LM_MOTOR_AVG_CURR), (2: LM_LOCK_CAGE_FAULT), (3: LM_MOTION_LIMIT), (4: LM_PW_ASSEMBLY_LEAK), (5: LM_TA_MCCS_COMM), (6: LM_MOTOR_PEAK_CURR), (7: LM_SPHER_BEARING), (8: LM_DRV_AXIS_LIMIT), (9: LM_GV_OPEN), (10: LM_ETHER_COMM_ERR), (11: LM_POWER_SUPPLY_LIMIT), (12: LM_MOTOR_OVERLOAD), (13: LM_FINE_BAL_LIMIT), (14: LM_GV_CLOSED), (15: LM_CAN_COMM_ERR), (16: LM_TA_PDU_UPS_ACT), (17: LM_HYDR_FLUID_TEMP), (18: LM_VIS_RANGE_ERR), (19: LM_SMA_UNSECURED), (20: LM_WATCHDOG), (21: LM_TA_PDU_UPS_3), (22: LM_PRESSURE_LIMIT), (23: LM_SPARE_23), (24: LM_SMA_MAX_CHOP_AMPL), (25: LM_LOSS_OF_TRC_ERR), (26: LM_SPARE_26), (27: LM_TA_STOP_ACTUATED), (28: LM_SPARE_28), (29: LM_SMA_MOTOR_AVG_CURR), (30: LM_LOSS_OF_TRC_WARN), (31: LM_FFU), (32: LM_SPARE_32), (33: LM_SPARE_33), (34: LM_SMA_MOTOR_PEAK_CURR), (35: LM_SPARE_35), (36: LM_SPARE_36), (37: LM_SPARE_37), (38: LM_SPARE_38), (39: LM_SPARE_39), (40: LM_TEMPERATURE),
903	mcp_limit_transition	mcp_annunciator_cond	FLOAT8	N/A	%lf	NUMBER	-1.79769E308	1.79769E308	out-of-range value that caused the annunciation condition
904	mcp_alarm								detection of an asynchronous error condition
905	mcp_alarm	packet	BINARY	N/A	%s	NUMBER			data packet as it was received from the TA
906	mcp_alarm	pkt_timestamp	TIME8	seconds	%d.%09d	NUMBER	0	2147483647	time data packet was constructed by TA
907	mcp_alarm	timestamp	TIME8	seconds	%d.%09d	NUMBER	0	2147483647	time at which the event happened or was captured

	A	B	C	D	E	F	G	H	I
908	mcp_alarm	mcp_alarm_value	UINT2	N/A	%u	ENUM	1	20	Indicates type of error detected by TAMCP(1: PARAM_ERR), (2: BYPASS_VALVE_NOT_OPEN), (3: TRC_CMD_CONNECTION_FAULT), (4: TRC_HK_CONNECTION_FAULT), (5: SMA_CONNECTION_FAULT), (6: PDU_CONNECTION_FAULT), (7: PWC_CONNECTION_FAULT), (8: PMS_CONNECTION_FAULT), (9: SMA_CONNECTION_FAILED), (10: PDU_CONNECTION_FAILED), (11: PWC_CONNECTION_FAILED), (12: PMS_CONNECTION_FAILED), (13: TRC_WATCHDOG), (14: TSC_WATCHDOG), (15: PDU_WATCHDOG), (16: INVALID_SYNC_WORD), (17: MCP_READ_TIMEOUT), (18: SMA_WATCHDOG), (19: TSC_CMD_CONNECTION_FAULT), (20: TSC_HK_CONNECTION_FAULT),I891
909	mcp_alarm	sw_function_id	UINT2	N/A	%u	NUMBER	0	65535	TA-MCP SW function that generated error message
910	mcp_alarm	alarm_data	BINARY	N/A	%s	NUMBER	N/A	N/A	Contains the command data packet which caused the alarm
911	mcp_warning								detection of an asynchronous warning condition
912	mcp_warning	packet	BINARY	N/A	%s	NUMBER			data packet as it was received from the TA
913	mcp_warning	pkt_timestamp	TIME8	seconds	%d.%09d	NUMBER	0	2147483647	time data packet was constructed by TA
914	mcp_warning	timestamp	TIME8	seconds	%d.%09d	NUMBER	0	2147483647	time at which the event happened or was captured
915	mcp_warning	mcp_warning_value	UINT2	N/A	%u	NUMBER	0	65535	type of warning issued by TAMCP (currently not used)
916	mcp_warning	sw_function_id	UINT2	N/A	%u	NUMBER	0	65535	TA-MCP SW function that generated error message
917	mcp_built_in_test_ans								answer to MCP_BUILT_IN_TEST command
918	mcp_built_in_test_ans	packet	BINARY	N/A	%s	NUMBER			data packet as it was received from the TA
919	mcp_built_in_test_ans	pkt_timestamp	TIME8	seconds	%d.%09d	NUMBER	0	2147483647	time data packet was constructed by TA
920	mcp_built_in_test_ans	timestamp	TIME8	seconds	%d.%09d	NUMBER	0	2147483647	time at which the event happened or was captured
921	mcp_built_in_test_ans	comm_pwc_status	UINT2	N/A	%u	BIT	0	65535	Result of PWC communication test(0: BIT_CAN_VERSION), (1: BIT_CAN_ID), (8: BIT_CAN_CMD_SEND_ERROR), (9: BIT_CAN_RES_ERROR), (10: BIT_CAN_RES_TIMEOUT), (11: BIT_CAN_MSG_ERROR), (13: BIT_PKT_PROTOCOL), (14: BIT_TIMEOUT), (15: BIT_CMD_SEND_ERROR),
922	mcp_built_in_test_ans	comm_pms_status	UINT2	N/A	%u	BIT	0	65535	Result of PMS communication test(0: BIT_CAN_VERSION), (1: BIT_CAN_ID), (8: BIT_CAN_CMD_SEND_ERROR), (9: BIT_CAN_RES_ERROR), (10: BIT_CAN_RES_TIMEOUT), (11: BIT_CAN_MSG_ERROR), (13: BIT_PKT_PROTOCOL), (14: BIT_TIMEOUT), (15: BIT_CMD_SEND_ERROR),
923	mcp_built_in_test_ans	comm_pdu_status	UINT2	N/A	%u	BIT	0	65535	Result of PDU communication test(0: BIT_CAN_VERSION), (1: BIT_CAN_ID), (8: BIT_CAN_CMD_SEND_ERROR), (9: BIT_CAN_RES_ERROR), (10: BIT_CAN_RES_TIMEOUT), (11: BIT_CAN_MSG_ERROR), (13: BIT_PKT_PROTOCOL), (14: BIT_TIMEOUT), (15: BIT_CMD_SEND_ERROR),
924	mcp_built_in_test_ans	comm_anu_status	UINT2	N/A	%u	BIT	0	65535	Result of annunciator communication test(0: BIT_CAN_VERSION), (1: BIT_CAN_ID), (8: BIT_CAN_CMD_SEND_ERROR), (9: BIT_CAN_RES_ERROR), (10: BIT_CAN_RES_TIMEOUT), (11: BIT_CAN_MSG_ERROR), (13: BIT_PKT_PROTOCOL), (14: BIT_TIMEOUT), (15: BIT_CMD_SEND_ERROR),

	A	B	C	D	E	F	G	H	I
925	mcp_built_in_test_ans	comm_sma_status	UINT2	N/A	%u	BIT	0	65535	Result of SMA communication test(0: SCS_GLOBAL_HEALTH_STATUS_S0), (1: SCS_GLOBAL_HEALTH_STATUS_S1), (2: SCS_GLOBAL_HEALTH_STATUS_S2), (3: SCS_GLOBAL_HEALTH_STATUS_S3), (4: SCS_GLOBAL_HEALTH_STATUS_S4), (5: SCS_GLOBAL_HEALTH_STATUS_S5), (6: SCS_GLOBAL_HEALTH_STATUS_S6), (7: SCS_GLOBAL_HEALTH_STATUS_S7), (8: BIT_SCS_CMD_VERSION), (9: BIT_SCS_CMD_INVALID), (10: BIT_SCS_MODE_CONFLICT), (11: BIT_SCS_LAN_ERROR), (13: BIT_PKT_PROTOCOL), (14: BIT_TIMEOUT), (15: BIT_CMD_SEND_ERROR),
926	mcp_built_in_test_ans	comm_tsc_status	UINT2	N/A	%u	BIT	0	65535	Result of TSC communication test(8: BIT_TSC_CMD_VERSION), (9: BIT_TSC_CMD_INVALID), (10: BIT_TSC_MODE_CONFLICT), (11: BIT_TSC_LAN_ERROR), (13: BIT_PKT_PROTOCOL), (14: BIT_TIMEOUT), (15: BIT_CMD_SEND_ERROR),
927	mcp_built_in_test_ans	comm_trc_status	UINT2	N/A	%u	BIT	0	65535	Result of TRC communication test(0: BIT_TRC_WFI_ERROR), (1: BIT_TRC_FFI_ERROR), (2: BIT_TRC_FPI_ERROR), (3: BIT_TRC_IMG_CAN_ERROR), (4: BIT_TRC_IRIG_ERROR), (5: BIT_TRC_FPI_ENC_ERROR), (6: BIT_TRC_WFI_CAM_ERROR), (7: BIT_TRC_FFI_CAM_ERROR), (8: BIT_TRC_FPI_CAM_ERROR), (9: BIT_TRC_EXEC_ERROR), (10: BIT_TRC_CMD_INVALID), (11: BIT_TRC_MODE_CONFLICT), (12: BIT_TRC_LAN_ERROR), (13: BIT_PKT_PROTOCOL), (14: BIT_TIMEOUT), (15: BIT_CMD_SEND_ERROR),
928	mcp_built_in_test_ans	mcp_status	UINT2	N/A	%u	BIT	0	65535	Summary of bits 13-15 in all comm_xxx_status results(13: BIT_PKT_PROTOCOL), (14: BIT_TIMEOUT), (15: BIT_CMD_SEND_ERROR),
929	mcp_built_in_test_ans	irigb_status	UINT2	N/A	%u	BIT	0	65535	Result of IRIG-B decoder test routines(0: IRIG_STATUS_S0), (1: IRIG_STATUS_S1), (2: IRIG_STATUS_S2), (3: IRIG_STATUS_S3), (4: IRIG_STATUS_S4), (5: IRIG_STATUS_S5), (6: IRIG_STATUS_S6), (7: IRIG_STATUS_S7), (15: BIT_IRIG_ACCESS_ERROR),
930	mcp_built_in_test_ans	massmem_status	UINT2	N/A	%u	BIT	0	65535	Result of mass memory test routines(0: BIT_MM_CHECK_ERROR), (1: BIT_MM_READ_ERROR), (2: BIT_MM_WRITE_ERROR), (3: BIT_MM_CLOSE_ERROR), (4: BIT_MM_OPEN_ERROR),
931	mcp_sw_version_ans								answer to MCP_SW_VERSION_ANS command
932	mcp_sw_version_ans	packet	BINARY	N/A	%s	NUMBER			data packet as it was received from the TA
933	mcp_sw_version_ans	pkt_timestamp	TIME8	seconds	%d.%09d	NUMBER	0	2147483647	time data packet was constructed by TA
934	mcp_sw_version_ans	timestamp	TIME8	seconds	%d.%09d	NUMBER	0	2147483647	time at which the event happened or was captured
935	mcp_sw_version_ans	mcp_major_version	UINT2	N/A	%u	NUMBER	0	65535	The installed major version of the TAMCP software.
936	mcp_sw_version_ans	mcp_minor_version	UINT2	N/A	%u	NUMBER	0	65535	The installed minor version of the TAMCP software.
937	mcp_command_ack								generic acknowledgment to MCP command
938	mcp_command_ack	packet	BINARY	N/A	%s	NUMBER			data packet as it was received from the TA
939	mcp_command_ack	pkt_timestamp	TIME8	seconds	%d.%09d	NUMBER	0	2147483647	time data packet was constructed by TA
940	mcp_command_ack	timestamp	TIME8	seconds	%d.%09d	NUMBER	0	2147483647	time at which the event happened or was captured

	A	B	C	D	E	F	G	H	I
941	mcp_command_ack	cmd_status	UINT1	N/A	%u	ENUM	2	4	contains a command acknowledgement status message(2: COMMAND_ACCEPTED), (4: SEQ_COUNT_CHG),
942	mcp_command_ans								generic answer to MCP command
943	mcp_command_ans	packet	BINARY	N/A	%s	NUMBER			data packet as it was received from the TA
944	mcp_command_ans	pkt_timestamp	TIME8	seconds	%d.%09d	NUMBER	0	2147483647	time data packet was constructed by TA
945	mcp_command_ans	timestamp	TIME8	seconds	%d.%09d	NUMBER	0	2147483647	time at which the event happened or was captured
946	mcp_command_ans	cmd_status	UINT1	N/A	%u	ENUM	1	255	contains a command answer status message(1: COMMAND_EXECUTED), (2: COMMAND_REJECTED_UNDEFINED_CMD), (3: COMMAND_REJECTED_INVALID_VERSION), (4: SYSTEM_BUSY), (5: COMMAND_REJECTED_PKT_HDR_ERR_INVALID_DATA_TYPE_TAG), (6: COMMAND_REJECTED_PKT_HDR_ERR_INVALID_APP_PROC_ID), (7: COMMAND_REJECTED_PKT_HDR_ERR_INVALID_TYPE), (8: COMMAND_REJECTED_CMD_LENGTH_ERROR), (9: COMMAND_REJECTED_PARM_OUT_OF_RANGE), (10: COMMAND_ABORTED_GV_IS_OPEN), (11: COMMAND_ABORTED_GV_IS_CLOSED), (12: COMMAND_ABORTED_GV_OPEN_TIMEOUT), (13: COMMAND_ABORTED_GV_CLOSE_TIMEOUT), (14: COMMAND_ABORTED_BPV_OPEN_ERROR), (15: COMMAND_ABORTED_BPV_CLOSE_ERROR), (16: COMMAND_ABORTED_DIFF_PRESSURE_TIMEOUT), (17: COMMAND_ABORTED_CAN_NSR_TIMEOUT), (18: COMMAND_ABORTED_IQC_ACCESS), (19: COMMAND_ABORTED_IQC_TSC_INFO), (20: COMMAND_ABORTED_IQC_SMA_INFO), (21: COMMAND_ABORTED_IQC_EL_RANGE), (22: COMMAND_ABORTED_IQC_TIMEOUT), (23: COMMAND_ABORTED_IQC_TSC_COMMAND), (24: COMMAND_ABORTED_IQC_SMA_COMMAND), (25: COMMAND_ABORTED_TA_SWITCHOFF_TIMEOUT), (26: COMMAND_ABORTED_TA_SWITCHOFF_EXEC_ERR), (241: COMMAND_ABORTED_CFG_FILE_ACC), (242: COMMAND_ABORTED_CFG_FILE_HEAD), (255: COMMAND_ERROR_INTERNAL),
947	mcp_hk_states								state of each TA subsystem reported by the MCP
948	mcp_hk_states	packet	BINARY	N/A	%s	NUMBER			data packet as it was received from the TA
949	mcp_hk_states	pkt_timestamp	TIME8	seconds	%d.%09d	NUMBER	0	2147483647	time data packet was constructed by TA
950	mcp_hk_states	timestamp	TIME8	seconds	%d.%09d	NUMBER	0	2147483647	time at which the event happened or was captured
951	mcp_hk_states	mcp_ta_state	UINT1	N/A	%u	NUMBER	0	255	overall state of the TA as determined by the TAMCP (currently unused)
952	mcp_hk_states	mcp_sma_state	UINT1	N/A	%u	ENUM	0	1	Connection state of all MCP-SMA TCP/IP connections(0: OFFLINE), (1: ONLINE),
953	mcp_hk_states	mcp_tsc_state	UINT1	N/A	%u	BIT	0	3	Connection state of the two TCP/IP sockets between the TASCU and the MCP(0: CMD_RESP_SOCKET_CONN), (1: HK_SOCKET_CONN),

	A	B	C	D	E	F	G	H	I
954	mcp_hk_states	pdu_state	UINT1	N/A	%u	ENUM	0	1	CAN communication state of the PDU(0: OFFLINE), (1: ONLINE),
955	mcp_hk_states	pms_state	UINT1	N/A	%u	NUMBER	0	255	CAN communication state of the PMS (not used, integrated with PWC device)
956	mcp_hk_states	pwc_state	UINT1	N/A	%u	ENUM	0	1	CAN communication state of the PWC(0: OFFLINE), (1: ONLINE),
957	mcp_hk_states	mcp_trc_state	UINT1	N/A	%u	BIT	0	3	Connection state of the two TCP/IP sockets between the Tracker and the MCP(0: CMD_RESP_SOCKET_CONN), (1: HK_SOCKET_CONN),
958	mcp_hk_states	mcp_mcp_state	UINT1	N/A	%u	BIT	0	15	self-reported state of the MCP(0: MCP_CFG_FILE_LOAD_STATE), (1: MCP_IQC_SPLINE_TABLE_LOAD_STATE), (2: MCP_STARTUP_MODE), (3: MCP_ANU_CAN_COMM_STATE),
959	mcp_hk_states	mcp_built_in_test_result	UINT2	N/A	%u	BIT	0	65535	Summary of communication results from last BIT (identical to mcp_status parameter from BIT response)(13: BIT_PKT_PROTOCOL), (14: BIT_TIMEOUT), (15: BIT_CMD_SEND_ERROR),
960	mcp_hk_pms								PMES HK data
961	mcp_hk_pms	packet	BINARY	N/A	%s	NUMBER			data packet as it was received from the TA
962	mcp_hk_pms	pkt_timestamp	TIME8	seconds	%d.%09d	NUMBER	0	2147483647	time data packet was constructed by TA
963	mcp_hk_pms	timestamp	TIME8	seconds	%d.%09d	NUMBER	0	2147483647	time at which the event happened or was captured
964	mcp_hk_pms	mcp_spi_temp_1	FLOAT4	degrees Celsius	%lf	NUMBER	-65	80	TA Structure Spider temperature sensor #1
965	mcp_hk_pms	mcp_spi_temp_2	FLOAT4	degrees Celsius	%lf	NUMBER	-65	80	TA Structure Spider temperature sensor #2
966	mcp_hk_pms	mcp_spi_temp_3	FLOAT4	degrees Celsius	%lf	NUMBER	-65	80	TA Structure Spider temperature sensor #3
967	mcp_hk_pms	pms_temp_1	FLOAT4	degrees Celsius	%lf	NUMBER	-65	80	Primary Mirror temperature sensor #1
968	mcp_hk_pms	pms_temp_2	FLOAT4	degrees Celsius	%lf	NUMBER	-65	80	Primary Mirror temperature sensor #2
969	mcp_hk_pms	pms_temp_3	FLOAT4	degrees Celsius	%lf	NUMBER	-65	80	Primary Mirror temperature sensor #3
970	mcp_hk_pms	tmm_temp_1	FLOAT4	degrees Celsius	%lf	NUMBER	-65	80	Tertiary Mirror Mount temperature sensor #1
971	mcp_hk_pms	nt_temp_1	FLOAT4	degrees Celsius	%lf	NUMBER	-65	80	Nasmyth Tube temperature sensor #1
972	mcp_hk_pms	nt_temp_2	FLOAT4	degrees Celsius	%lf	NUMBER	-65	80	Nasmyth Tube temperature sensor #2
973	mcp_hk_pms	nt_temp_3	FLOAT4	degrees Celsius	%lf	NUMBER	-65	80	Nasmyth Tube temperature sensor #3
974	mcp_hk_pms	sma_temp_1	FLOAT4	degrees Celsius	%lf	NUMBER	-65	80	Secondary Mirror Assembly temperature sensor #1
975	mcp_hk_pms	sm_temp_1	FLOAT4	degrees Celsius	%lf	NUMBER	-65	80	Secondary Mirror temperature sensor #1
976	mcp_hk_pwc								PWC HK data
977	mcp_hk_pwc	packet	BINARY	N/A	%s	NUMBER			data packet as it was received from the TA
978	mcp_hk_pwc	pkt_timestamp	TIME8	seconds	%d.%09d	NUMBER	0	2147483647	time data packet was constructed by TA

	A	B	C	D	E	F	G	H	I
979	mcp_hk_pwc	timestamp	TIME8	seconds	%d.%09d	NUMBER	0	2147483647	time at which the event happened or was captured
980	mcp_hk_pwc	pwc_temp_1	FLOAT4	degrees Celsius	%lf	NUMBER	-65	80	TA PWC Flange temperature sensor #1
981	mcp_hk_pwc	pwc_temp_2	FLOAT4	degrees Celsius	%lf	NUMBER	-65	80	TA PWC Flange temperature sensor #2
982	mcp_hk_pwc	pwc_temp_3	FLOAT4	degrees Celsius	%lf	NUMBER	-65	80	TA PWC Flange temperature sensor #3
983	mcp_hk_pwc	pwc_temp_4	FLOAT4	degrees Celsius	%lf	NUMBER	-65	80	TA PWC Flange temperature sensor #4
984	mcp_hk_pwc	pwc_temp_5	FLOAT4	degrees Celsius	%lf	NUMBER	-65	80	TA PWC Flange temperature sensor #5
985	mcp_hk_pwc	pwc_temp_6	FLOAT4	degrees Celsius	%lf	NUMBER	-65	80	TA PWC Flange temperature sensor #6
986	mcp_hk_pwc	mcp_diff_pressure	FLOAT4	millibars	%lf	NUMBER	-1720	1720	differential pressure in flange assembly
987	mcp_hk_pwc	mcp_gate_pos_1_open	UINT1	N/A	%u	ENUM			gate valve 'open' sensor(0: FALSE), (1: TRUE),
988	mcp_hk_pwc	mcp_gate_pos_1_closed	UINT1	N/A	%u	ENUM			gate valve 'closed' sensor(0: FALSE), (1: TRUE),
989	mcp_hk_pwc	mcp_bypass_pos_open	UINT1	N/A	%u	ENUM			bypass valve 'open' sensor(0: FALSE), (1: TRUE),
990	mcp_hk_pwc	mcp_bypass_pos_closed	UINT1	N/A	%u	ENUM			bypass valve 'closed' sensor(0: FALSE), (1: TRUE),
991	mcp_hk_pdu								PDU HK data
992	mcp_hk_pdu	packet	BINARY	N/A	%s	NUMBER			data packet as it was received from the TA
993	mcp_hk_pdu	pkt_timestamp	TIME8	seconds	%d.%09d	NUMBER	0	2147483647	time data packet was constructed by TA
994	mcp_hk_pdu	timestamp	TIME8	seconds	%d.%09d	NUMBER	0	2147483647	time at which the event happened or was captured
995	mcp_hk_pdu	udp_power_status	UINT2	N/A	%u	BIT	0	65535	Status of the UPS distribution panel(0: TAMCP_OUTPUT_STATUS), (1: TRC_OUTPUT_STATUS), (2: IMAGERS_OUTPUT_STATUS), (3: SMCU_OUTPUT_STATUS), (4: FFU_OUTPUT_STATUS), (5: PW_BYPASS_VALVE_OUTPUT_STATUS), (6: PW_GATE_VALVE_OUTPUT_STATUS), (7: EXT_DC_OUTPUT_STATUS), (8: PUA_OUTPUT_STATUS), (9: PUB_OUTPUT_STATUS), (10: PUC_OUTPUT_STATUS), (11: ATCU_OUTPUT_STATUS), (12: UDP_ALARM), (13: UDP_TEMP_OK), (14: 28V_CONV1_UDP_POWER_STATUS), (15: 28V_CONV2_UDP_POWER_STATUS),
996	mcp_hk_pdu	rccb_status	UINT2	N/A	%u	BIT	0	65535	Status of the remote controlled circuit breakers(0: RCCB_Q11_ICU_STATUS), (1: RCCB_Q21_ICU_STATUS), (2: RCCB_Q22_ICU_STATUS), (3: RCCB_Q23_ICU_STATUS), (4: RCCB_Q31_ICU_STATUS), (5: RCCB_Q32_ICU_STATUS), (6: RCCB_Q33_ICU_STATUS), (7: RCCB_Q34_ICU_STATUS), (8: RCCB_Q11_AUX_STATUS), (9: RCCB_Q21_AUX_STATUS), (10: RCCB_Q22_AUX_STATUS), (11: RCCB_Q23_AUX_STATUS), (12: RCCB_Q31_AUX_STATUS), (13: RCCB_Q32_AUX_STATUS), (14: RCCB_Q33_AUX_STATUS), (15: RCCB_Q34_AUX_STATUS),

	A	B	C	D	E	F	G	H	I
997	mcp_hk_pdu	psu_pcp_temp_status	UINT2	N/A	%u	BIT	0	3	Status of PSU and PCP overtemperature status signals(0: PSU_TEMP_OK), (1: PCP_TEMP_OK),
998	mcp_hk_pdu	ups_status	UINT2	N/A	%u	BIT	0	65535	Status of the uninterruptable power supply(0: UPS1_LOW_BATTERY), (1: UPS1_ON), (2: UPS1_LOGIC_OK), (3: UPS1_OVERTEMP), (4: UPS1_OVERLOAD), (5: UPS1_UTILITY_ON), (8: UPS2_LOW_BATTERY), (9: UPS2_ON), (10: UPS2_LOGIC_OK), (11: UPS2_OVERTEMP), (12: UPS2_OVERLOAD), (13: UPS2_UTILITY_ON),
999	mcp_hk_pdu	power_bus_vol_1_l1	FLOAT4	V	%lf	NUMBER	0	150	Voltage of power bus 1, phase L1
1000	mcp_hk_pdu	power_bus_vol_1_l2	FLOAT4	V	%lf	NUMBER	0	150	Voltage of power bus 1, phase L2
1001	mcp_hk_pdu	power_bus_vol_1_l3	FLOAT4	V	%lf	NUMBER	0	150	Voltage of power bus 1, phase L3
1002	mcp_hk_pdu	power_bus_vol_2_l1	FLOAT4	V	%lf	NUMBER	0	150	Voltage of power bus 2, phase L1
1003	mcp_hk_pdu	power_bus_vol_2_l2	FLOAT4	V	%lf	NUMBER	0	150	Voltage of power bus 2, phase L2
1004	mcp_hk_pdu	power_bus_vol_2_l3	FLOAT4	V	%lf	NUMBER	0	150	Voltage of power bus 2, phase L3
1005	mcp_hk_pdu	power_bus_vol_3_l1	FLOAT4	V	%lf	NUMBER	0	150	Voltage of power bus 3, phase L1
1006	mcp_hk_pdu	power_bus_vol_3_l2	FLOAT4	V	%lf	NUMBER	0	150	Voltage of power bus 3, phase L2
1007	mcp_hk_pdu	power_bus_vol_3_l3	FLOAT4	V	%lf	NUMBER	0	150	Voltage of power bus 3, phase L3
1008	mcp_hk_pdu	power_bus_curr_1_l1	FLOAT4	A	%lf	NUMBER	0	50	Current of power bus 1, phase L1
1009	mcp_hk_pdu	power_bus_curr_1_l2	FLOAT4	A	%lf	NUMBER	0	50	Current of power bus 1, phase L2
1010	mcp_hk_pdu	power_bus_curr_1_l3	FLOAT4	A	%lf	NUMBER	0	50	Current of power bus 1, phase L3
1011	mcp_hk_pdu	power_bus_curr_2_l1	FLOAT4	A	%lf	NUMBER	0	50	Current of power bus 2, phase L1
1012	mcp_hk_pdu	power_bus_curr_2_l2	FLOAT4	A	%lf	NUMBER	0	50	Current of power bus 2, phase L2
1013	mcp_hk_pdu	power_bus_curr_2_l3	FLOAT4	A	%lf	NUMBER	0	50	Current of power bus 2, phase L3
1014	mcp_hk_pdu	power_bus_curr_3_l1	FLOAT4	A	%lf	NUMBER	0	50	Current of power bus 3, phase L1
1015	mcp_hk_pdu	power_bus_curr_3_l2	FLOAT4	A	%lf	NUMBER	0	50	Current of power bus 3, phase L2
1016	mcp_hk_pdu	power_bus_curr_3_l3	FLOAT4	A	%lf	NUMBER	0	50	Current of power bus 3, phase L3
1017	mcp_hk_pdu	ups_voltage_1	FLOAT4	V	%lf	NUMBER	0	150	UPS output voltage 1
1018	mcp_hk_pdu	ups_voltage_2	FLOAT4	V	%lf	NUMBER	0	150	UPS output voltage 2
1019	mcp_hk_pdu	ups_current_1	FLOAT4	A	%lf	NUMBER	0	50	UPS output current 1
1020	mcp_hk_pdu	ups_current_2	FLOAT4	A	%lf	NUMBER	0	50	UPS output current 2
1021	mcp_hk_anu								Annunciator HK data
1022	mcp_hk_anu	packet	BINARY	N/A	%s	NUMBER			data packet as it was received from the TA
1023	mcp_hk_anu	pkt_timestamp	TIME8	seconds	%d.%09d	NUMBER	0	2147483647	time data packet was constructed by TA
1024	mcp_hk_anu	timestamp	TIME8	seconds	%d.%09d	NUMBER	0	2147483647	time at which the event happened or was captured

	A	B	C	D	E	F	G	H	I
1025	mcp_hk_anu	anu_flags_1	UINT4	N/A	%u	BIT	0	4294967295	State of annunciators 1-32(0: LM_MOTOR_AVG_CURR), (1: LM_LOCK_CAGE_FAULT), (2: LM_MOTION_LIMIT), (3: LM_PW_ASSEMBLY_LEAK), (4: LM_TA_MCCS_COMM), (5: LM_MOTOR_PEAK_CURR), (6: LM_SPHER_BEARING), (7: LM_DRV_AXIS_LIMIT), (8: LM_GV_OPEN), (9: LM_ETHER_COMM_ERR), (10: LM_POWER_SUPPLY_LIMIT), (11: LM_MOTOR_OVERLOAD), (12: LM_FINE_BAL_LIMIT), (13: LM_GV_CLOSED), (14: LM_CAN_COMM_ERR), (15: LM_TA_PDU_UPS_ACT), (16: LM_HYDR_FLUID_TEMP), (17: LM_VIS_RANGE_ERR), (18: LM_SMA_UNSECURED), (19: LM_WATCHDOG), (20: LM_TA_PDU_UPS_3), (21: LM_PRESSURE_LIMIT), (22: LM_SPARE_23), (23: LM_SMA_MAX_CHOP_AMPL), (24: LM_LOSS_OF_TRC_ERR), (25: LM_SPARE_26), (26: LM_TA_STOP_ACTUATED), (27: LM_SPARE_28), (28: LM_SMA_MOTOR_AVG_CURR), (29: LM_LOSS_OF_TRC_WARN), (30: LM_FFU), (31: LM_SPARE_32),
1026	mcp_hk_anu	anu_flags_2	UINT4	N/A	%u	BIT	0	255	State of annunciators 33-40(0: LM_SPARE_33), (1: LM_SMA_MOTOR_PEAK_CURR), (2: LM_SPARE_35), (3: LM_SPARE_36), (4: LM_SPARE_37), (5: LM_SPARE_38), (6: LM_SPARE_39), (7: LM_TEMPERATURE),
1027	mcp_config								data returned in response to the mcp_config_get command
1028	mcp_config	packet	BINARY	N/A	%s	NUMBER	N/A	N/A	data packet as it was received from the TA
1029	mcp_config	pkt_timestamp	TIME8	seconds	%d.%09d	NUMBER	0	2147483647	time data packet was constructed by TA
1030	mcp_config	can_base_addr	UINT4	N/A	%u	NUMBER	0	4294967295	CAN module base address
1031	mcp_config	can_poll	INT4	N/A	%d	NUMBER	-32768	32767	CAN polling time (in CPU ticks)
1032	mcp_config	can_controller_id	INT4	N/A	%d	NUMBER	-32768	32767	CAN controller ID
1033	mcp_config	anu_can_version	UINT4	N/A	%u	NUMBER	0	4294967295	ANU CAN controller version ID
1034	mcp_config	anu_can_nsr_timeout	INT4	seconds	%d	NUMBER	-32768	32767	timeout of CAN NSR-response
1035	mcp_config	anu_test_time	INT4	seconds	%d	NUMBER	-32768	32767	ANU-LED test time
1036	mcp_config	anu_pwle	FLOAT4	millibars	%lf	NUMBER	-3.40E+38	3.40E+38	differential pressure limit
1037	mcp_config	anu_m2un	FLOAT4	degrees Celsius	%lf	NUMBER	-3.40E+38	3.40E+38	temperature limit of SM not-in-place def.
1038	mcp_config	anu_fcm_curr	FLOAT4	amperes	%lf	NUMBER	-3.40E+38	3.40E+38	current limit FCM average
1039	mcp_config	anu_tcm_curr	FLOAT4	amperes	%lf	NUMBER	-3.40E+38	3.40E+38	current limit TCM average
1040	mcp_config	anu_tcm_low_lim	FLOAT4	arcseconds	%lf	NUMBER	-3.40E+38	3.40E+38	TCM chop amplitude low-limit
1041	mcp_config	anu_tcm_up_lim	FLOAT4	arcseconds	%lf	NUMBER	-3.40E+38	3.40E+38	TCM chop amplitude up-limit
1042	mcp_config	anu_fcm_act_low_lim	INT4	micrometers	%d	NUMBER	-32768	32767	FCM actuator position low-limit
1043	mcp_config	anu_fcm_act_up_lim	INT4	micrometers	%d	NUMBER	-32768	32767	FCM actuator position up-limit
1044	mcp_config	anu_m1spi_diff	FLOAT4	kelvins	%lf	NUMBER	-3.40E+38	3.40E+38	temperature difference between M1 and spider
1045	mcp_config	anu_pdu_ups12_batop	UINT2	N/A	%u	NUMBER	0	65535	utility off bits of NOVA converter
1046	mcp_config	anu_pdu_ups12_lowbat	UINT2	N/A	%u	NUMBER	0	65535	low bat bits of NOVA converter
1047	mcp_config	anu_pdu_115_3p_low_lim	FLOAT4	volts	%lf	NUMBER	-3.40E+38	3.40E+38	lower voltage limit 3Phase power

	A	B	C	D	E	F	G	H	I
1048	mcp_config	anu_pdu_115_3p_up_lim	FLOAT4	volts	%lf	NUMBER	-3.40E+38	3.40E+38	upper voltage limit 3Phase power
1049	mcp_config	anu_pdu_115_ups_low_lim	FLOAT4	volts	%lf	NUMBER	-3.40E+38	3.40E+38	lower voltage limit UPS power
1050	mcp_config	anu_pdu_115_ups_up_lim	FLOAT4	volts	%lf	NUMBER	-3.40E+38	3.40E+38	upper voltage limit UPS power
1051	mcp_config	anu_pdu_PB1_curr_avg	FLOAT4	amperes	%lf	NUMBER	-3.40E+38	3.40E+38	PUA1 on PB1 average current limit
1052	mcp_config	anu_pdu_PB1_curr_peak	FLOAT4	amperes	%lf	NUMBER	-3.40E+38	3.40E+38	PUA1 on PB1 peak current limit
1053	mcp_config	anu_can_id_base	INT4	N/A	%d	NUMBER	-32768	32767	CAN_ID base of display elements
1054	mcp_config	anu_display_test_text	STRING	N/A	%s	NUMBER	N/A	N/A	ANU test pattern
1055	mcp_config	anu_display_test_code	UINT1	N/A	%u	NUMBER	N/A	N/A	ANU display properties (flash, reverse)
1056	mcp_config	anu_display_0_text	STRING	N/A	%s	NUMBER	N/A	N/A	text of ANU element
1057	mcp_config	anu_display_0_code	UINT1	N/A	%u	NUMBER	N/A	N/A	ANU display properties (flash, reverse)
1058	mcp_config	anu_display_1_text	STRING	N/A	%s	NUMBER	N/A	N/A	text of ANU element
1059	mcp_config	anu_display_1_code	UINT1	N/A	%u	NUMBER	N/A	N/A	ANU display properties (flash, reverse)
1060	mcp_config	anu_display_2_text	STRING	N/A	%s	NUMBER	N/A	N/A	text of ANU element
1061	mcp_config	anu_display_2_code	UINT1	N/A	%u	NUMBER	N/A	N/A	ANU display properties (flash, reverse)
1062	mcp_config	anu_display_3_text	STRING	N/A	%s	NUMBER	N/A	N/A	text of ANU element
1063	mcp_config	anu_display_3_code	UINT1	N/A	%u	NUMBER	N/A	N/A	ANU display properties (flash, reverse)
1064	mcp_config	anu_display_4_text	STRING	N/A	%s	NUMBER	N/A	N/A	text of ANU element
1065	mcp_config	anu_display_4_code	UINT1	N/A	%u	NUMBER	N/A	N/A	ANU display properties (flash, reverse)
1066	mcp_config	anu_display_5_text	STRING	N/A	%s	NUMBER	N/A	N/A	text of ANU element
1067	mcp_config	anu_display_5_code	UINT1	N/A	%u	NUMBER	N/A	N/A	ANU display properties (flash, reverse)
1068	mcp_config	anu_display_6_text	STRING	N/A	%s	NUMBER	N/A	N/A	text of ANU element
1069	mcp_config	anu_display_6_code	UINT1	N/A	%u	NUMBER	N/A	N/A	ANU display properties (flash, reverse)
1070	mcp_config	anu_display_7_text	STRING	N/A	%s	NUMBER	N/A	N/A	text of ANU element
1071	mcp_config	anu_display_7_code	UINT1	N/A	%u	NUMBER	N/A	N/A	ANU display properties (flash, reverse)
1072	mcp_config	anu_display_8_text	STRING	N/A	%s	NUMBER	N/A	N/A	text of ANU element
1073	mcp_config	anu_display_8_code	UINT1	N/A	%u	NUMBER	N/A	N/A	ANU display properties (flash, reverse)
1074	mcp_config	anu_display_9_text	STRING	N/A	%s	NUMBER	N/A	N/A	text of ANU element
1075	mcp_config	anu_display_9_code	UINT1	N/A	%u	NUMBER	N/A	N/A	ANU display properties (flash, reverse)
1076	mcp_config	anu_display_10_text	STRING	N/A	%s	NUMBER	N/A	N/A	text of ANU element
1077	mcp_config	anu_display_10_code	UINT1	N/A	%u	NUMBER	N/A	N/A	ANU display properties (flash, reverse)
1078	mcp_config	anu_display_11_text	STRING	N/A	%s	NUMBER	N/A	N/A	text of ANU element
1079	mcp_config	anu_display_11_code	UINT1	N/A	%u	NUMBER	N/A	N/A	ANU display properties (flash, reverse)
1080	mcp_config	anu_display_12_text	STRING	N/A	%s	NUMBER	N/A	N/A	text of ANU element
1081	mcp_config	anu_display_12_code	UINT1	N/A	%u	NUMBER	N/A	N/A	ANU display properties (flash, reverse)
1082	mcp_config	anu_display_13_text	STRING	N/A	%s	NUMBER	N/A	N/A	text of ANU element
1083	mcp_config	anu_display_13_code	UINT1	N/A	%u	NUMBER	N/A	N/A	ANU display properties (flash, reverse)
1084	mcp_config	anu_display_14_text	STRING	N/A	%s	NUMBER	N/A	N/A	text of ANU element
1085	mcp_config	anu_display_14_code	UINT1	N/A	%u	NUMBER	N/A	N/A	ANU display properties (flash, reverse)
1086	mcp_config	anu_display_15_text	STRING	N/A	%s	NUMBER	N/A	N/A	text of ANU element
1087	mcp_config	anu_display_15_code	UINT1	N/A	%u	NUMBER	N/A	N/A	ANU display properties (flash, reverse)
1088	mcp_config	anu_display_16_text	STRING	N/A	%s	NUMBER	N/A	N/A	text of ANU element
1089	mcp_config	anu_display_16_code	UINT1	N/A	%u	NUMBER	N/A	N/A	ANU display properties (flash, reverse)

	A	B	C	D	E	F	G	H	I
1090	mcp_config	anu_display_17_text	STRING	N/A	%s	NUMBER	N/A	N/A	text of ANU element
1091	mcp_config	anu_display_17_code	UINT1	N/A	%u	NUMBER	N/A	N/A	ANU display properties (flash, reverse)
1092	mcp_config	anu_display_18_text	STRING	N/A	%s	NUMBER	N/A	N/A	text of ANU element
1093	mcp_config	anu_display_18_code	UINT1	N/A	%u	NUMBER	N/A	N/A	ANU display properties (flash, reverse)
1094	mcp_config	anu_display_19_text	STRING	N/A	%s	NUMBER	N/A	N/A	text of ANU element
1095	mcp_config	anu_display_19_code	UINT1	N/A	%u	NUMBER	N/A	N/A	ANU display properties (flash, reverse)
1096	mcp_config	anu_display_20_text	STRING	N/A	%s	NUMBER	N/A	N/A	text of ANU element
1097	mcp_config	anu_display_20_code	UINT1	N/A	%u	NUMBER	N/A	N/A	ANU display properties (flash, reverse)
1098	mcp_config	anu_display_21_text	STRING	N/A	%s	NUMBER	N/A	N/A	text of ANU element
1099	mcp_config	anu_display_21_code	UINT1	N/A	%u	NUMBER	N/A	N/A	ANU display properties (flash, reverse)
1100	mcp_config	anu_display_22_text	STRING	N/A	%s	NUMBER	N/A	N/A	text of ANU element
1101	mcp_config	anu_display_22_code	UINT1	N/A	%u	NUMBER	N/A	N/A	ANU display properties (flash, reverse)
1102	mcp_config	anu_display_23_text	STRING	N/A	%s	NUMBER	N/A	N/A	text of ANU element
1103	mcp_config	anu_display_23_code	UINT1	N/A	%u	NUMBER	N/A	N/A	ANU display properties (flash, reverse)
1104	mcp_config	anu_display_24_text	STRING	N/A	%s	NUMBER	N/A	N/A	text of ANU element
1105	mcp_config	anu_display_24_code	UINT1	N/A	%u	NUMBER	N/A	N/A	ANU display properties (flash, reverse)
1106	mcp_config	anu_display_25_text	STRING	N/A	%s	NUMBER	N/A	N/A	text of ANU element
1107	mcp_config	anu_display_25_code	UINT1	N/A	%u	NUMBER	N/A	N/A	ANU display properties (flash, reverse)
1108	mcp_config	anu_display_26_text	STRING	N/A	%s	NUMBER	N/A	N/A	text of ANU element
1109	mcp_config	anu_display_26_code	UINT1	N/A	%u	NUMBER	N/A	N/A	ANU display properties (flash, reverse)
1110	mcp_config	anu_display_27_text	STRING	N/A	%s	NUMBER	N/A	N/A	text of ANU element
1111	mcp_config	anu_display_27_code	UINT1	N/A	%u	NUMBER	N/A	N/A	ANU display properties (flash, reverse)
1112	mcp_config	anu_display_28_text	STRING	N/A	%s	NUMBER	N/A	N/A	text of ANU element
1113	mcp_config	anu_display_28_code	UINT1	N/A	%u	NUMBER	N/A	N/A	ANU display properties (flash, reverse)
1114	mcp_config	anu_display_29_text	STRING	N/A	%s	NUMBER	N/A	N/A	text of ANU element
1115	mcp_config	anu_display_29_code	UINT1	N/A	%u	NUMBER	N/A	N/A	ANU display properties (flash, reverse)
1116	mcp_config	anu_display_30_text	STRING	N/A	%s	NUMBER	N/A	N/A	text of ANU element
1117	mcp_config	anu_display_30_code	UINT1	N/A	%u	NUMBER	N/A	N/A	ANU display properties (flash, reverse)
1118	mcp_config	anu_display_31_text	STRING	N/A	%s	NUMBER	N/A	N/A	text of ANU element
1119	mcp_config	anu_display_31_code	UINT1	N/A	%u	NUMBER	N/A	N/A	ANU display properties (flash, reverse)
1120	mcp_config	anu_display_32_text	STRING	N/A	%s	NUMBER	N/A	N/A	text of ANU element
1121	mcp_config	anu_display_32_code	UINT1	N/A	%u	NUMBER	N/A	N/A	ANU display properties (flash, reverse)
1122	mcp_config	anu_display_33_text	STRING	N/A	%s	NUMBER	N/A	N/A	text of ANU element
1123	mcp_config	anu_display_33_code	UINT1	N/A	%u	NUMBER	N/A	N/A	ANU display properties (flash, reverse)
1124	mcp_config	anu_display_34_text	STRING	N/A	%s	NUMBER	N/A	N/A	text of ANU element
1125	mcp_config	anu_display_34_code	UINT1	N/A	%u	NUMBER	N/A	N/A	ANU display properties (flash, reverse)
1126	mcp_config	anu_display_35_text	STRING	N/A	%s	NUMBER	N/A	N/A	text of ANU element
1127	mcp_config	anu_display_35_code	UINT1	N/A	%u	NUMBER	N/A	N/A	ANU display properties (flash, reverse)
1128	mcp_config	anu_display_36_text	STRING	N/A	%s	NUMBER	N/A	N/A	text of ANU element
1129	mcp_config	anu_display_36_code	UINT1	N/A	%u	NUMBER	N/A	N/A	ANU display properties (flash, reverse)
1130	mcp_config	anu_display_37_text	STRING	N/A	%s	NUMBER	N/A	N/A	text of ANU element
1131	mcp_config	anu_display_37_code	UINT1	N/A	%u	NUMBER	N/A	N/A	ANU display properties (flash, reverse)
1132	mcp_config	anu_display_38_text	STRING	N/A	%s	NUMBER	N/A	N/A	text of ANU element
1133	mcp_config	anu_display_38_code	UINT1	N/A	%u	NUMBER	N/A	N/A	ANU display properties (flash, reverse)

	A	B	C	D	E	F	G	H	I
1134	mcp_config	anu_display_39_text	STRING	N/A	%s	NUMBER	N/A	N/A	text of ANU element
1135	mcp_config	anu_display_39_code	UINT1	N/A	%u	NUMBER	N/A	N/A	ANU display properties (flash, reverse)
1136	mcp_config	csys_bit_timeout	INT4	seconds	%d	NUMBER	N/A	N/A	built-in test completion timeout
1137	mcp_config	csys_crl_size	UINT4	N/A	%u	NUMBER	N/A	N/A	MCP CR-Log-File size (in bytes)
1138	mcp_config	csys_switch_off_timeout	INT4	seconds	%d	NUMBER	N/A	N/A	timeout of TAMCP switch-off cmd
1139	mcp_config	mccsh_ping_timeout	INT4	seconds	%d	NUMBER	N/A	N/A	ping timeout from MCCS
1140	mcp_config	pdu_wd_timeout_ini	INT4	seconds	%d	NUMBER	N/A	N/A	initial PDU watchdog timeout
1141	mcp_config	pdu_wd_timeout	INT4	seconds	%d	NUMBER	N/A	N/A	PDU watchdog timeout
1142	mcp_config	pdu_can_version	UINT4	N/A	%u	NUMBER	N/A	N/A	PDU CAN controller version ID
1143	mcp_config	pdu_can_nsr_timeout	INT4	seconds	%d	NUMBER	N/A	N/A	timeout of CAN NSR-response
1144	mcp_config	pdu_pow_bus_volt_gain	FLOAT4	N/A	%lf	NUMBER	N/A	N/A	gain for bus voltage calculation
1145	mcp_config	pdu_pow_bus_volt_offset	FLOAT4	volts	%lf	NUMBER	N/A	N/A	offset for bus voltage calculation
1146	mcp_config	pdu_pow_bus_curr_gain	FLOAT4	N/A	%lf	NUMBER	N/A	N/A	gain for bus current calculation
1147	mcp_config	pdu_pow_bus_curr_offset	FLOAT4	amperes	%lf	NUMBER	N/A	N/A	offset for bus current calculation
1148	mcp_config	pdu_ups_bus_volt_gain	FLOAT4	N/A	%lf	NUMBER	N/A	N/A	gain for UPS voltage calculation
1149	mcp_config	pdu_ups_bus_volt_offset	FLOAT4	volts	%lf	NUMBER	N/A	N/A	offset for UPS voltage calculation
1150	mcp_config	pdu_ups_bus_curr_gain	FLOAT4	N/A	%lf	NUMBER	N/A	N/A	gain for UPS current calculation
1151	mcp_config	pdu_ups_bus_curr_offset	FLOAT4	amperes	%lf	NUMBER	N/A	N/A	offset for UPS current calculation
1152	mcp_config	pwc_can_version	UINT4	N/A	%u	NUMBER	N/A	N/A	PWC CAN controller version
1153	mcp_config	pwc_can_nsr_timeout	INT4	seconds	%d	NUMBER	N/A	N/A	timeout of CAN NSR-response
1154	mcp_config	pwc_cnt_limit	UINT4	N/A	%u	NUMBER	N/A	N/A	loop count limit
1155	mcp_config	pwc_press_limit	FLOAT4	millibars	%lf	NUMBER	N/A	N/A	diff. pressure limit
1156	mcp_config	pwc_press_calc_gain	FLOAT4	N/A	%lf	NUMBER	N/A	N/A	pressure calc. gain
1157	mcp_config	pwc_press_calc_off	FLOAT4	millibars	%lf	NUMBER	N/A	N/A	pressure calc. offset
1158	mcp_config	pwc_bpv_open_time	INT4	millisecond s	%d	NUMBER	N/A	N/A	bypass valve open time duration
1159	mcp_config	pwc_bpv_open_timeout	INT4	millisecond s	%d	NUMBER	N/A	N/A	bypass valve open timeout
1160	mcp_config	pwc_bpv_close_timeout	INT4	millisecond s	%d	NUMBER	N/A	N/A	bypass valve close timeout
1161	mcp_config	pwc_gv_open_timeout	INT4	millisecond s	%d	NUMBER	N/A	N/A	timeout for gate valve open
1162	mcp_config	pwc_gv_close_timeout	INT4	millisecond s	%d	NUMBER	N/A	N/A	timeout for gate valve close
1163	mcp_config	smh_wd_timeout	INT4	seconds	%d	NUMBER	N/A	N/A	SCS watchdog timeout
1164	mcp_config	smh_health_req_rate	INT4	seconds	%d	NUMBER	N/A	N/A	health request send rate
1165	mcp_config	tch_wd_timeout	INT4	seconds	%d	NUMBER	N/A	N/A	TRC watchdog timeout
1166	mcp_config	tsh_wd_timeout	INT4	seconds	%d	NUMBER	N/A	N/A	TASCU watchdog timeout
1167	mcp_config	iqc_exec_timeout	INT4	seconds	%d	NUMBER	N/A	N/A	IQC cmd execution timeout
1168	mcp_config	iqc_m2_r_ref_pos	FLOAT4	millimeters	%lf	NUMBER	N/A	N/A	M2 vertex r position
1169	mcp_config	iqc_m2_s_ref_pos	FLOAT4	millimeters	%lf	NUMBER	N/A	N/A	M2 vertex s position
1170	mcp_config	iqc_m2_t_ref_pos	FLOAT4	millimeters	%lf	NUMBER	N/A	N/A	M2 vertex t position
1171	mcp_config	iqc_m2_l_ref_rot	FLOAT4	N/A	%lf	NUMBER	N/A	N/A	M2 vertex EL (unused up to now)

	A	B	C	D	E	F	G	H	I
1172	mcp_config	iqc_m2_m_ref_rot	FLOAT4	N/A	%lf	NUMBER	N/A	N/A	M2 vertex XEL (unused up to now)
1173	mcp_config	iqc_m2_n_ref_rot	FLOAT4	N/A	%lf	NUMBER	N/A	N/A	M2 vertex LOS (unused up to now)
1174	mcp_telemetry_response								data returned in response to test command
1175	mcp_telemetry_response	packet	BINARY	N/A	%s	NUMBER	N/A	N/A	data packet as it was received from the TA
1176	mcp_telemetry_response	pkt_timestamp	TIME8	seconds	%d.%09d	NUMBER	0	2147483647	time data packet was constructed by TA
1177	mcp_telemetry_response	logical_l1	UINT1	N/A	%u	ENUM	0	1	a logical value to return(0: FALSE), (1: TRUE),
1178	mcp_telemetry_response	unsigned_one_byte_integer_u1	UINT1	N/A	%u	NUMBER	0	254	an unsigned one-byte int to return
1179	mcp_telemetry_response	unsigned_two_byte_integer_u2	UINT2	N/A	%u	NUMBER	0	65535	an unsigned two-byte int to return
1180	mcp_telemetry_response	unsigned_four_byte_integer_u4	UINT4	N/A	%ld	NUMBER	0	4294967295	an unsigned four-byte int to return
1181	mcp_telemetry_response	signed_one_byte_integer_i1	BYTE	N/A	%d	NUMBER	-128	127	a signed one-byte int to return
1182	mcp_telemetry_response	signed_two_byte_integer_i2	INT2	N/A	%d	NUMBER	-32768	32767	a signed two-byte int to return
1183	mcp_telemetry_response	signed_four_byte_integer_i4	INT4	N/A	%ld	NUMBER	-2147483648	2147483647	a signed four-byte int to return
1184	mcp_telemetry_response	single_prec_float_r4	FLOAT4	N/A	%.6lf	NUMBER	-3.40E+38	3.40E+38	a single-precision float to return
1185	mcp_telemetry_response	double_prec_float_r8	FLOAT8	N/A	%.16lf	NUMBER	-1.79769E308	1.79769E308	a double-precision float to return
1186	mcp_telemetry_response	eight_byte_time_stamp_t8	TIME8	seconds	%ld.%09ld	NUMBER	0	2147483647	a standard 8-byte timestamp to return
1187	**ta_pos** **Data produced by the TA Position Commandable**								
1188	**HK NAME**	**Name**	**Rep**	**Units**	**Format**	**Form**	**lo_lim**	**hi_lim**	**Description**
1189	rcs_id		STRING	none	%s	NUMBER			Version information for the XML file that defines this data source
1190	archive_info								Archive Info
1191	archive_info	archive_status	BOOL4	none	%s	ENUM	0	1	(0: false), (1: true),
1192	archive_info	current_bytes_archived	FLOAT8	none	%1f	NUMBER	0		Total bytes written to the current ark file
1193	archive_info	total_bytes_archived	FLOAT8	none	%1f	NUMBER	0		Total bytes written since this data source starts
1194	archive_info	archive_file_name	STRING	none	%s	NUMBER			Archive file name
1195	archive_nsamples								Archive nth sample for data groups, the part before the _nsample must match the data group node name
1196	archive_nsamples	current_bytes_archived_nsample	INT4	N/A	%d	NUMBER	0		
1197	archive_nsamples	total_bytes_archived_nsample	INT4	N/A	%d	NUMBER	0		
1198	archive_nsamples	time_until_rewind_nsample	INT4	N/A	%d	NUMBER	0		
1199	commands		STRING	none	%s	NUMBER			Contains the last SCL command sent to ta_pos
1200	responses								Contains SCL responses for ta_pos commands
1201	responses	resume	STRING	none	%s	NUMBER			Last SCL response sent back to the issuer of the resume command

	A	B	C	D	E	F	G	H	I
1202	responses	suspend	STRING	none	%s	NUMBER			Last SCL response sent back to the issuer of the suspend command
1203	responses	set	STRING	none	%s	NUMBER			Last SCL response sent back to the issuer of the set command
1204	responses	verbose	STRING	none	%s	NUMBER			Last SCL response sent back to the issuer of the verbose command
1205	responses	quiet	STRING	none	%s	NUMBER			Last SCL response sent back to the issuer of the quiet command
1206	responses	autofocus	STRING	none	%s	NUMBER			Last SCL response sent back to the issuer of the autofocus command
1207	responses	fpi_focus	STRING	none	%s	NUMBER			Last SCL response sent back to the issuer of the fpi_focus command
1208	responses	goto	STRING	none	%s	NUMBER			Last SCL response sent back to the issuer of the goto command
1209	responses	offset	STRING	none	%s	NUMBER			Last SCL response sent back to the issuer of the offset command
1210	responses	scan	STRING	none	%s	NUMBER			Last SCL response sent back to the issuer of the scan command
1211	responses	stop	STRING	none	%s	NUMBER			Last SCL response sent back to the issuer of the stop command
1212	responses	rewind	STRING	none	%s	NUMBER			Last SCL response sent back to the issuer of the rewind command
1213	responses	tweak_define	STRING	none	%s	NUMBER			Last SCL response sent back to the issuer of the tweak_define command
1214	responses	tweak	STRING	none	%s	NUMBER			Last SCL response sent back to the issuer of the tweak command
1215	responses	track	STRING	none	%s	NUMBER			Last SCL response sent back to the issuer of the track command
1216	responses	pattern	STRING	none	%s	NUMBER			Last SCL response sent back to the issuer of the pattern command
1217	responses	stow	STRING	none	%s	NUMBER			Last SCL response sent back to the issuer of the stow command
1218	ta_pos_alert								Alert produced by the TA Position Commandable
1219	ta_pos_alert	ta_pos_alert_info	STRING	none	%s	NUMBER			Informational messages (events)
1220	ta_pos_alert	ta_pos_alert_warning	STRING	none	%s	NUMBER			Events requiring user action for recovery
1221	ta_pos_alert	ta_pos_alert_error	STRING	none	%s	NUMBER			Non-recoverable problems which are not fatal
1222	ta_pos_alert	ta_pos_alert_fatal	STRING	none	%s	NUMBER			Fatal problems
1223	ta_pos_alarm								Alarm produced by the TA Position Commandable
1224	ta_pos_alarm	ta_pos_alarm_info	STRING	none	%s	NUMBER			Normal events requiring user confirmation
1225	ta_pos_alarm_ta_pos_alarm_info	redefine							
1226	ta_pos_alarm_ta_pos_alarm_info	delete							
1227	ta_pos_alarm_ta_pos_alarm_info	create							
1228	ta_pos_alarm	ta_pos_alarm_warning	STRING	none	%s	NUMBER			Abnormal events requiring user confirmation
1229	ta_pos_alarm_ta_pos_alarm_warning	quantum							
1230	ta_pos_alarm_ta_pos_alarm_warning	deactivate							
1231	ta_pos_alarm	ta_pos_alarm_error	STRING	none	%s	NUMBER			Serious problems requiring user confirmation
1232	ta_pos_alarm	ta_pos_alarm_fatal	STRING	none	%s	NUMBER			Fatal problems requiring user confirmation
1233	leg_duration		FLOAT8	seconds	%lf	NUMBER	0	86400	Total duration of the current flight leg
1234	observation_time		FLOAT8	seconds	%lf	NUMBER	0	86400	Total duration of the current observation
1235	rewind_trigger		FLOAT8	degrees	%lf	NUMBER			Point at which a ta_pos.rewind will be required
1236	time_until_rewind		FLOAT8	seconds	%lf	NUMBER	0		Time remaining until a ta_pos.rewind will be required
1237	scan								user-settable defaults for the ta_pos.scan command
1238	scan	coord_sys	STRING		%s	ENUM			Default coordinate system for start_angle scanning(0: erf), (1: tarf), (2: wfirf), (3: ffirf), (4: fpirf), (5: sirf), (6: ecrf), (7: galrf), (8: sglrf),

	A	B	C	D	E	F	G	H	I
1239	scan	mode	STRING		%s	ENUM			Type of scanning in progress (if any)(0: NONE), (1: RATES), (2: ANGLE), (3: GREAT CIRCLE),
1240	rewind								user-settable defaults for the ta_pos.rewind command
1241	rewind	chop_sys	STRING		%s	NUMBER			Reference frame in which chopping is constant
1242	rewind	nod_sys	STRING		%s	NUMBER			Reference frame in which nodding is constant
1243	rewind	center	STRING		%s	NUMBER			Where to rotate around
1244	rewind	los_margin	FLOAT8	degrees	%lf	NUMBER	0	3	Margin between LOS soft and hard limits
1245	rewind	quantum_time	FLOAT8	seconds	%lf	NUMBER			Minimum time between rewinds
1246	rewind	total_time	FLOAT8	seconds	%lf	NUMBER			Total time for the current observation
1247	stow								user-settable defaults for the ta_pos.stow command
1248	stow	coarse	FLOAT8	degrees	%lf	NUMBER			Default coarse elevation for ta_pos.stow command
1249	track								user-settable defaults for the ta_pos.track command
1250	track	state	INT4		0x%X	ENUM			Currently commanded track state(0: off), (0: none), (1: centroid), (3: rof), (5: limb), (9: offset), (11: rof+offset), (33: centroid+inertial), (35: rof+inertial), (41: offset+inertial), (43: rof+offset+inertial),
1251	track	centroid	STRING		%s	NUMBER			Object being used for tracking (AOI)
1252	track	limb1	STRING		%s	NUMBER			First AOI used for limb tracking
1253	track	limb2	STRING		%s	NUMBER			Second AOI used for limb tracking
1254	track	rof1	STRING		%s	NUMBER			One of two objects being used for ROF tracking
1255	track	rof2	STRING		%s	NUMBER			One of two objects being used for ROF tracking
1256	pattern								user-settable defaults for the ta_pos.pattern command
1257	pattern	coord_sys	STRING		%s	NUMBER			Default reference frame for pattern movement
1258	pattern	mode	STRING		%s	ENUM			Positioning mode for pattern command(1: absolute), (2: relative),
1259	pattern	rate	FLOAT8	arcseconds per second	%lf	NUMBER	0	3609.634109	Scan rate for pattern command
1260	pattern	next_id	INT4		%d	NUMBER			Next ID to send with pattern command
1261	autofocus								user-settable defaults for the ta_pos.autofocus command
1262	autofocus	timeout	UINT4	seconds	%d	NUMBER	1	90	Default timeout for autofocus
1263	autofocus	aoi	STRING		%s	NUMBER			Name of the AOI to use for focussing
1264	fpi_focus								settings for the ta_pos.fpi_focus command
1265	fpi_focus	mode	STRING	N/A	%s	NUMBER			Instrument mode during last fpi_focus
1266	tweak								user-settable defaults for the ta_pos.tweak command
1267	tweak	coord_sys	STRING	N/A	%s	ENUM			Coordinate system currently used by the tweaker box(0: irf), (1: taicrf), (2: erf), (3: sirf), (4: fpirf), (5: wfirf), (6: ffirf),
1268	tweak	mode	STRING	N/A	%s	ENUM			Type of movement currently used by the tweaker box(0: NotSet), (1: scan), (2: offset), (4: step),
1269	tweak	x_off	FLOAT8	sidereal seconds	%lf	NUMBER	0		Horizontal offset or step from tweaker box button push
1270	tweak	y_off	FLOAT8	arcseconds	%lf	NUMBER	0		Vertical offset or step from tweaker box button push
1271	tweak	x_rate	FLOAT8	sidereal seconds per second	%lf	NUMBER	0		Horizontal scan rate from tweaker box button push

	A	B	C	D	E	F	G	H	I
1272	tweak	y_rate	FLOAT8	arcseconds per second	%lf	NUMBER	0		Vertical scan rate from tweaker box button push
1273	oper_state		INT4	none	0x%2.2X	NUMBER			Operating state
1274	sibs_ANY	ra	FLOAT8	sidereal hours	%.3sgh	NUMBER	0	24	Right Ascension for the SI boresight
1275	sibs_ANY	dec	FLOAT8	degrees	%.3sgd	NUMBER	-90	90	Declination for the SI boresight
1276	sibs_ANY	vpa	FLOAT8	degrees	%lf	NUMBER			Vertical Position Angle for the SI boresight
1277	sibs_ANY	rof	FLOAT8	degrees	%lf	NUMBER			Rotation of Field for the SI boresight
1278	sibs_ANY	count	INT4	unity	%d	NUMBER			Number of valid centroids for the chop point since definition
1279	sibs_ANY	error	FLOAT8	arcseconds	%lf	NUMBER			Error estimate for the SI boresight
1280	sibs_ANY	stdev	FLOAT8	arcseconds	%lf	NUMBER			Standard deviation for the SI boresight
1281	sibs_ANY	debug	STRING	N/A	%s	NUMBER			Tag for debugging
1282	wfi_fov								Wide Field Imager (WFI) Field of View (FOV)
1283	wfi_fov	center							WFI center coordinates
1284	wfi_fov_center	ra	FLOAT8	sidereal hours	%.3sgh	NUMBER	0	24	Right Ascension for the WFI boresight
1285	wfi_fov_center	dec	FLOAT8	degrees	%.3sgd	NUMBER	-90	90	Declination for the WFI boresight
1286	wfi_fov_center	vpa	FLOAT8	degrees	%lf	NUMBER			Vertical Position Angle for the WFI boresight
1287	wfi_fov_center	rof	FLOAT8	degrees	%lf	NUMBER			Rotation of Field for the WFI boresight
1288	wfi_fov_center	count	INT4	unity	%d	NUMBER			Number of valid positions for the AOI since definition
1289	wfi_fov_center	error	FLOAT8	arcseconds	%lf	NUMBER			Error estimate for the WFI boresight
1290	wfi_fov_center	stdev	FLOAT8	arcseconds	%lf	NUMBER			Standard deviation for the WFI boresight
1291	wfi_fov_center	debug	STRING	N/A	%s	NUMBER			Tag for debugging
1292	wfi_fov	ulc							WFI upper left corner (ULC) coordinates
1293	wfi_fov_ulc	ra	FLOAT8	sidereal hours	%.3sgh	NUMBER	0	24	Right Ascension for ULC of WFI FOV
1294	wfi_fov_ulc	dec	FLOAT8	degrees	%.3sgd	NUMBER	-90	90	Declination for ULC of WFI FOV
1295	wfi_fov_ulc	vpa	FLOAT8	degrees	%lf	NUMBER			Vertical Position Angle for ULC of WFI FOV
1296	wfi_fov_ulc	rof	FLOAT8	degrees	%lf	NUMBER			Rotation of Field for ULC of WFI FOV
1297	wfi_fov	lrc							WFI lower right corner (LRC) coordinates
1298	wfi_fov_lrc	ra	FLOAT8	sidereal hours	%.3sgh	NUMBER	0	24	Right Ascension for LRC of WFI FOV
1299	wfi_fov_lrc	dec	FLOAT8	degrees	%.3sgd	NUMBER	-90	90	Declination for LRC of WFI FOV
1300	wfi_fov_lrc	vpa	FLOAT8	degrees	%lf	NUMBER			Vertical Position Angle for LRC of WFI FOV
1301	wfi_fov_lrc	rof	FLOAT8	degrees	%lf	NUMBER			Rotation of Field for LRC of WFI FOV
1302	ffi_fov								Fine Field Imager (FFI) Field of View (FOV)
1303	ffi_fov	center							FFI center coordinates
1304	ffi_fov_center	ra	FLOAT8	sidereal hours	%.3sgh	NUMBER	0	24	Right Ascension for the FFI boresight
1305	ffi_fov_center	dec	FLOAT8	degrees	%.3sgd	NUMBER	-90	90	Declination for the FFI boresight
1306	ffi_fov_center	vpa	FLOAT8	degrees	%lf	NUMBER			Vertical Position Angle for the FFI boresight

	A	B	C	D	E	F	G	H	I
1307	ffi_fov_center	rof	FLOAT8	degrees	%lf	NUMBER			Rotation of Field for the FFI boresight
1308	ffi_fov_center	count	INT4	unity	%d	NUMBER			Number of valid positions for the AOI since definition
1309	ffi_fov_center	error	FLOAT8	arcseconds	%lf	NUMBER			Error estimate for the FFI boresight
1310	ffi_fov_center	stdev	FLOAT8	arcseconds	%lf	NUMBER			Standard deviation for the FFI boresight
1311	ffi_fov_center	debug	STRING	N/A	%s	NUMBER			Tag for debugging
1312	ffi_fov	ulc							FFI upper left corner (ULC) coordinates
1313	ffi_fov_ulc	ra	FLOAT8	sidereal hours	%.3sgh	NUMBER	0	24	Right Ascension for ULC of FFI FOV
1314	ffi_fov_ulc	dec	FLOAT8	degrees	%.3sgd	NUMBER	-90	90	Declination for ULC of FFI FOV
1315	ffi_fov_ulc	vpa	FLOAT8	degrees	%lf	NUMBER			Vertical Position Angle for ULC of FFI FOV
1316	ffi_fov_ulc	rof	FLOAT8	degrees	%lf	NUMBER			Rotation of Field for ULC of FFI FOV
1317	ffi_fov	lrc							FFI lower right corner (LRC) coordinates
1318	ffi_fov_lrc	ra	FLOAT8	sidereal hours	%.3sgh	NUMBER	0	24	Right Ascension for LRC of FFI FOV
1319	ffi_fov_lrc	dec	FLOAT8	degrees	%.3sgd	NUMBER	-90	90	Declination for LRC of FFI FOV
1320	ffi_fov_lrc	vpa	FLOAT8	degrees	%lf	NUMBER			Vertical Position Angle for LRC of FFI FOV
1321	ffi_fov_lrc	rof	FLOAT8	degrees	%lf	NUMBER			Rotation of Field for LRC of FFI FOV
1322	fpi_fov								Focal Plane Imager (FPI) Field of View (FOV)
1323	fpi_fov	center							FPI center coordinates
1324	fpi_fov_center	ra	FLOAT8	sidereal hours	%.3sgh	NUMBER	0	24	Right Ascension for the FPI boresight
1325	fpi_fov_center	dec	FLOAT8	degrees	%.3sgd	NUMBER	-90	90	Declination for the FPI boresight
1326	fpi_fov_center	vpa	FLOAT8	degrees	%lf	NUMBER			Vertical Position Angle for the FPI boresight
1327	fpi_fov_center	rof	FLOAT8	degrees	%lf	NUMBER			Rotation of Field for the FPI boresight
1328	fpi_fov_center	count	INT4	unity	%d	NUMBER			Number of valid positions for the AOI since definition
1329	fpi_fov_center	error	FLOAT8	arcseconds	%lf	NUMBER			Error estimate for the FPI boresight
1330	fpi_fov_center	stdev	FLOAT8	arcseconds	%lf	NUMBER			Standard deviation for the FPI boresight
1331	fpi_fov_center	debug	STRING	N/A	%s	NUMBER			Tag for debugging
1332	fpi_fov	ulc							FPI upper left corner (ULC) coordinates
1333	fpi_fov_ulc	ra	FLOAT8	sidereal hours	%.3sgh	NUMBER	0	24	Right Ascension for ULC of FPI FOV
1334	fpi_fov_ulc	dec	FLOAT8	degrees	%.3sgd	NUMBER	-90	90	Declination for ULC of FPI FOV
1335	fpi_fov_ulc	vpa	FLOAT8	degrees	%lf	NUMBER			Vertical Position Angle for ULC of FPI FOV
1336	fpi_fov_ulc	rof	FLOAT8	degrees	%lf	NUMBER			Rotation of Field for ULC of FPI FOV
1337	fpi_fov	lrc							FPI lower right corner (LRC) coordinates
1338	fpi_fov_lrc	ra	FLOAT8	sidereal hours	%.3sgh	NUMBER	0	24	Right Ascension for LRC of FPI FOV
1339	fpi_fov_lrc	dec	FLOAT8	degrees	%.3sgd	NUMBER	-90	90	Declination for LRC of FPI FOV
1340	fpi_fov_lrc	vpa	FLOAT8	degrees	%lf	NUMBER			Vertical Position Angle for LRC of FPI FOV
1341	fpi_fov_lrc	rof	FLOAT8	degrees	%lf	NUMBER			Rotation of Field for LRC of FPI FOV
1342	ref								user-settable Reference Position

	A	B	C	D	E	F	G	H	I
1343	ref	ra	FLOAT8	sidereal hours	%.3sgh	NUMBER	0	24	Right Ascension for ref
1344	ref	dec	FLOAT8	degrees	%.3sgd	NUMBER	-90	90	Declination for ref
1345	ref	vpa	FLOAT8	degrees	%lf	NUMBER			Vertical Position Angle for ref
1346	ref	rof	FLOAT8	degrees	%lf	NUMBER			Rotation of Field for ref
1347	scan								user-settable defaults for the ta_pos.scan command
1348	scan	coord_sys	STRING		%s	ENUM			Default coordinate system for start_angle scanning(0: erf), (1: tarf), (2: wfirf), (3: ffirf), (4: fpirf), (5: sirf), (6: ecrf), (7: galrf), (8: sglrf),
1349	scan	mode	STRING		%s	ENUM			Type of scanning in progress (if any)(0: NONE), (1: RATES), (2: ANGLE), (3: GREAT CIRCLE),
1350	rewind								user-settable defaults for the ta_pos.rewind command
1351	rewind	chop_sys	STRING		%s	NUMBER			Reference frame in which chopping is constant
1352	rewind	nod_sys	STRING		%s	NUMBER			Reference frame in which nodding is constant
1353	rewind	center	STRING		%s	NUMBER			Where to rotate around
1354	rewind	los_margin	FLOAT8	degrees	%lf	NUMBER	0	3	Margin between LOS soft and hard limits
1355	rewind	quantum_time	FLOAT8	seconds	%lf	NUMBER			Minimum time between rewinds
1356	rewind	total_time	FLOAT8	seconds	%lf	NUMBER			Total time for the current observation
1357	stow								user-settable defaults for the ta_pos.stow command
1358	stow	coarse	FLOAT8	degrees	%lf	NUMBER			Default coarse elevation for ta_pos.stow command
1359	track								user-settable defaults for the ta_pos.track command
1360	track	state	INT4		0x%X	ENUM			Currently commanded track state(0: off), (0: none), (1: centroid), (3: rof), (5: limb), (9: offset), (11: rof+offset), (33: centroid+inertial), (35: rof+inertial), (41: offset+inertial), (43: rof+offset+inertial),
1361	track	centroid	STRING		%s	NUMBER			Object being used for tracking (AOI)
1362	track	limb1	STRING		%s	NUMBER			First AOI used for limb tracking
1363	track	limb2	STRING		%s	NUMBER			Second AOI used for limb tracking
1364	track	rof1	STRING		%s	NUMBER			One of two objects being used for ROF tracking
1365	track	rof2	STRING		%s	NUMBER			One of two objects being used for ROF tracking
1366	pattern								user-settable defaults for the ta_pos.pattern command
1367	pattern	coord_sys	STRING		%s	NUMBER			Default reference frame for pattern movement
1368	pattern	mode	STRING		%s	ENUM			Positioning mode for pattern command(1: absolute), (2: relative),
1369	pattern	rate	INT4	arcseconds per second	%lf	NUMBER	0	3609.634109	Scan rate for pattern command
1370	pattern	next_id	INT4		%d	NUMBER			Next ID to send with pattern command
1371	autofocus								user-settable defaults for the ta_pos.autofocus command
1372	autofocus	timeout	UINT4	seconds	%d	NUMBER	1	90	Default timeout for autofocus
1373	autofocus	aoi	STRING		%s	NUMBER			Name of the AOI to use for focussing
1374	fpi_focus								settings for the ta_pos.fpi_focus command
1375	fpi_focus	mode	STRING	N/A	%s	NUMBER			Instrument mode during last fpi_focus
1376	tweak								user-settable defaults for the ta_pos.tweak command
1377	tweak	coord_sys	STRING	N/A	%s	ENUM			Coordinate system currently used by the tweaker box(0: irf), (1: taicrf), (2: erf), (3: sirf), (4: fpirf), (5: wfirf), (6: ffirf),

	A	B	C	D	E	F	G	H	I
1378	tweak	mode	STRING	N/A	%s	ENUM			Type of movement currently used by the tweaker box(0: NotSet), (1: scan), (2: offset), (4: step),
1379	tweak	x_off	FLOAT8	sidereal seconds	%lf	NUMBER	0		Horizontal offset or step from tweaker box button push
1380	tweak	y_off	FLOAT8	arcseconds	%lf	NUMBER	0		Vertical offset or step from tweaker box button push
1381	tweak	x_rate	FLOAT8	sidereal seconds per second	%lf	NUMBER	0		Horizontal scan rate from tweaker box button push
1382	tweak	y_rate	FLOAT8	arcseconds per second	%lf	NUMBER	0		Vertical scan rate from tweaker box button push
1383	oper_state		INT4	none	0x%2.2X	NUMBER			Operating state
1384	**ta_sma** **TA Secondary Mirror Assembly (SMA) data**								
1385	**HK NAME**	**Name**	**Rep**	**Units**	**Format**	**Form**	**lo_lim**	**hi_lim**	**Description**
1386	rcs_id		STRING	N/A	%s	NUMBER			Version information for the XML file that defines this data source
1387	archive_info								Archive Info
1388	archive_info	archive_status	BOOL4	N/A	%s	ENUM	0	1	(0: false), (1: true),
1389	archive_info	current_bytes_archived	FLOAT8	N/A	%1f	NUMBER	0		Total bytes written to the current ark file
1390	archive_info	total_bytes_archived	FLOAT8	N/A	%1f	NUMBER	0		Total bytes written since this data source starts
1391	archive_info	archive_file_name	STRING	N/A	%s	NUMBER			Archive file name
1392	archive_nsamples								Archive nth sample for data groups, the part before the _nsample must match the data group node name
1393	archive_nsamples	current_bytes_archived_nsample	INT4	N/A	%d	NUMBER	0		
1394	archive_nsamples	total_bytes_archived_nsample	INT4	N/A	%d	NUMBER	0		
1395	archive_nsamples	scs_health_status_nsample	INT4	N/A	%d	NUMBER	0		
1396	archive_nsamples	scs_composite_status_nsample	INT4	N/A	%d	NUMBER	0		
1397	archive_nsamples	fcm_actuator_position_status_nsample	INT4	N/A	%d	NUMBER	0		
1398	archive_nsamples	tcm_chopper_status_nsample	INT4	N/A	%d	NUMBER	0		
1399	archive_nsamples	scs_temperature_status_nsample	INT4	N/A	%d	NUMBER	0		
1400	archive_nsamples	scs_actuator_current_status_nsample	INT4	N/A	%d	NUMBER	0		
1401	archive_nsamples	fcm_position_status_nsample	INT4	N/A	%d	NUMBER	0		
1402	commands		STRING	none	%s	NUMBER			Contains the last SCL command sent to the SMA
1403	responses								Contains SCL responses for SMA commands
1404	responses	scs_power_on_off	STRING	none	%s	NUMBER			Last SCL response sent back to the issuer of the scs_power_on_off command

	A	B	C	D	E	F	G	H	I
1405	responses	scs_built_in_test	STRING	none	%s	NUMBER			Last SCL response sent back to the issuer of the scs_built_in_test command
1406	responses	scs_reset_init	STRING	none	%s	NUMBER			Last SCL response sent back to the issuer of the scs_reset_init command
1407	responses	scs_stop	STRING	none	%s	NUMBER			Last SCL response sent back to the issuer of the scs_stop command
1408	responses	scs_park	STRING	none	%s	NUMBER			Last SCL response sent back to the issuer of the scs_park command
1409	responses	fcm_move	STRING	none	%s	NUMBER			Last SCL response sent back to the issuer of the fcm_move command
1410	responses	fcm_actuator	STRING	none	%s	NUMBER			Last SCL response sent back to the issuer of the fcm_actuator command
1411	responses	tcm_chop_on_off	STRING	none	%s	NUMBER			Last SCL response sent back to the issuer of the tcm_chop_on_off command
1412	responses	tcm_fbc_on_off	STRING	none	%s	NUMBER			Last SCL response sent back to the issuer of the tcm_fbc_on_off command
1413	responses	tcm_chopper	STRING	none	%s	NUMBER			Last SCL response sent back to the issuer of the tcm_chopper command
1414	responses	tcm_chop_sync_source	STRING	none	%s	NUMBER			Last SCL response sent back to the issuer of the tcm_chop_sync_source command
1415	responses	tcm_chop_wf_select	STRING	none	%s	NUMBER			Last SCL response sent back to the issuer of the tcm_chop_wf_select command
1416	responses	scs_set_temperature_trigger	STRING	none	%s	NUMBER			Last SCL response sent back to the issuer of the scs_set_temperature_trigger command
1417	responses	scs_state_request	STRING	none	%s	NUMBER			Last SCL response sent back to the issuer of the scs_state_request command
1418	responses	scs_health_request	STRING	none	%s	NUMBER			Last SCL response sent back to the issuer of the scs_health_request command
1419	responses	scs_status_subscribe	STRING	none	%s	NUMBER			Last SCL response sent back to the issuer of the scs_status_subscribe command
1420	responses	scs_status_unsubscribe	STRING	none	%s	NUMBER			Last SCL response sent back to the issuer of the scs_status_unsubscribe command
1421	responses	send_packet	STRING	none	%s	NUMBER			Last SCL response sent back to the issuer of the send_packet command
1422	ta_sma_alert								Alerts produced by the TA Secondary Mirror Assembly
1423	ta_sma_alert	ta_sma_alert_info	STRING	none	%s	NUMBER			Information alert
1424	ta_sma_alert	ta_sma_alert_warning	STRING	none	%s	NUMBER			Warning alert
1425	ta_sma_alert	ta_sma_alert_error	STRING	none	%s	NUMBER			Error alert
1426	ta_sma_alert	ta_sma_alert_fatal	STRING	none	%s	NUMBER			Fatal alert
1427	ta_sma_alarm								Alarms produced by the TA Secondary Mirror Assembly
1428	ta_sma_alarm	ta_sma_alarm_info	STRING	none	%s	NUMBER			Information alarm
1429	ta_sma_alarm	ta_sma_alarm_warning	STRING	none	%s	NUMBER			Warning alarm
1430	ta_sma_alarm	ta_sma_alarm_error	STRING	none	%s	NUMBER			Error alarm
1431	ta_sma_alarm	ta_sma_alarm_fatal	STRING	none	%s	NUMBER			Fatal alarm
1432	scs_power_on_off_ack								acknowledgement/answer to an scs_power_on_off command
1433	scs_power_on_off_ack	packet	BINARY	none	%s	NUMBER			data packet as it was received from the TA
1434	scs_power_on_off_ack	pkt_timestamp	TIME8	seconds	%d.%09d	NUMBER	0	2147483647	time data packet was constructed by TA

	A	B	C	D	E	F	G	H	I
1435	scs_power_on_off_ack	command_flag	UINT2	none	%u	ENUM	0	4112	Command acknowledge/answer message from the SCS(0: COMMAND_ACCEPTED), (4097: SCS_MODE_CONFLICT), (4098: SCS_WRONG_NUMBER_OF_PARAMS), (4100: SCS_PARAM_OUT_OF_RANGE), (4104: SCS_UNDEFINED_COMMAND), (4112: SCS_INVALID_VERSION),
1436	scs_power_on_off_ack	timestamp	TIME8	seconds	%d.%09d	NUMBER	0	2147483647	time at which the event happened or was captured
1437	scs_built_in_test_ack								acknowledgement/answer to an scs_built_in_test command
1438	scs_built_in_test_ack	packet	BINARY	none	%s	NUMBER			data packet as it was received from the TA
1439	scs_built_in_test_ack	pkt_timestamp	TIME8	seconds	%d.%09d	NUMBER	0	2147483647	time data packet was constructed by TA
1440	scs_built_in_test_ack	command_flag	UINT2	none	%u	ENUM	0	4112	Command acknowledge/answer message from the SCS(0: COMMAND_ACCEPTED), (4097: SCS_MODE_CONFLICT), (4098: SCS_WRONG_NUMBER_OF_PARAMS), (4100: SCS_PARAM_OUT_OF_RANGE), (4104: SCS_UNDEFINED_COMMAND), (4112: SCS_INVALID_VERSION),
1441	scs_built_in_test_ack	timestamp	TIME8	seconds	%d.%09d	NUMBER	0	2147483647	time at which the event happened or was captured
1442	scs_reset_init_ack								acknowledgement/answer to an scs_reset_init command
1443	scs_reset_init_ack	packet	BINARY	none	%s	NUMBER			data packet as it was received from the TA
1444	scs_reset_init_ack	pkt_timestamp	TIME8	seconds	%d.%09d	NUMBER	0	2147483647	time data packet was constructed by TA
1445	scs_reset_init_ack	command_flag	UINT2	none	%u	ENUM	0	4112	Command acknowledge/answer message from the SCS(0: COMMAND_ACCEPTED), (4097: SCS_MODE_CONFLICT), (4098: SCS_WRONG_NUMBER_OF_PARAMS), (4100: SCS_PARAM_OUT_OF_RANGE), (4104: SCS_UNDEFINED_COMMAND), (4112: SCS_INVALID_VERSION),
1446	scs_reset_init_ack	timestamp	TIME8	seconds	%d.%09d	NUMBER	0	2147483647	time at which the event happened or was captured
1447	scs_stop_ack								acknowledgement/answer to an scs_stop command
1448	scs_stop_ack	packet	BINARY	none	%s	NUMBER			data packet as it was received from the TA
1449	scs_stop_ack	pkt_timestamp	TIME8	seconds	%d.%09d	NUMBER	0	2147483647	time data packet was constructed by TA
1450	scs_stop_ack	command_flag	UINT2	none	%u	ENUM	0	4112	Command acknowledge/answer message from the SCS(0: COMMAND_ACCEPTED), (4097: SCS_MODE_CONFLICT), (4098: SCS_WRONG_NUMBER_OF_PARAMS), (4100: SCS_PARAM_OUT_OF_RANGE), (4104: SCS_UNDEFINED_COMMAND), (4112: SCS_INVALID_VERSION),
1451	scs_stop_ack	timestamp	TIME8	seconds	%d.%09d	NUMBER	0	2147483647	time at which the event happened or was captured
1452	scs_park_ack								acknowledgement/answer to an scs_park command
1453	scs_park_ack	packet	BINARY	none	%s	NUMBER			data packet as it was received from the TA
1454	scs_park_ack	pkt_timestamp	TIME8	seconds	%d.%09d	NUMBER	0	2147483647	time data packet was constructed by TA
1455	scs_park_ack	command_flag	UINT2	none	%u	ENUM	0	4112	Command acknowledge/answer message from the SCS(0: COMMAND_ACCEPTED), (4097: SCS_MODE_CONFLICT), (4098: SCS_WRONG_NUMBER_OF_PARAMS), (4100: SCS_PARAM_OUT_OF_RANGE), (4104: SCS_UNDEFINED_COMMAND), (4112: SCS_INVALID_VERSION),

	A	B	C	D	E	F	G	H	I
1456	scs_park_ack	timestamp	TIME8	seconds	%d.%09d	NUMBER	0	2147483647	time at which the event happened or was captured
1457	fcm_move_ack								acknowledgement/answer to an fcm_move command
1458	fcm_move_ack	packet	BINARY	none	%s	NUMBER			data packet as it was received from the TA
1459	fcm_move_ack	pkt_timestamp	TIME8	seconds	%d.%09d	NUMBER	0	2147483647	time data packet was constructed by TA
1460	fcm_move_ack	command_flag	UINT2	none	%u	ENUM	0	4112	Command acknowledge/answer message from the SCS(0: COMMAND_ACCEPTED), (4097: SCS_MODE_CONFLICT), (4098: SCS_WRONG_NUMBER_OF_PARAMS), (4100: SCS_PARAM_OUT_OF_RANGE), (4104: SCS_UNDEFINED_COMMAND), (4112: SCS_INVALID_VERSION),
1461	fcm_move_ack	timestamp	TIME8	seconds	%d.%09d	NUMBER	0	2147483647	time at which the event happened or was captured
1462	fcm_actuator_ack								acknowledgement/answer to an fcm_actuator command
1463	fcm_actuator_ack	packet	BINARY	none	%s	NUMBER			data packet as it was received from the TA
1464	fcm_actuator_ack	pkt_timestamp	TIME8	seconds	%d.%09d	NUMBER	0	2147483647	time data packet was constructed by TA
1465	fcm_actuator_ack	command_flag	UINT2	none	%u	ENUM	0	4112	Command acknowledge/answer message from the SCS(0: COMMAND_ACCEPTED), (4097: SCS_MODE_CONFLICT), (4098: SCS_WRONG_NUMBER_OF_PARAMS), (4100: SCS_PARAM_OUT_OF_RANGE), (4104: SCS_UNDEFINED_COMMAND), (4112: SCS_INVALID_VERSION),
1466	fcm_actuator_ack	timestamp	TIME8	seconds	%d.%09d	NUMBER	0	2147483647	time at which the event happened or was captured
1467	tcm_chop_on_off_ack								acknowledgement/answer to an tcm_chop_on_off command
1468	tcm_chop_on_off_ack	packet	BINARY	none	%s	NUMBER			data packet as it was received from the TA
1469	tcm_chop_on_off_ack	pkt_timestamp	TIME8	seconds	%d.%09d	NUMBER	0	2147483647	time data packet was constructed by TA
1470	tcm_chop_on_off_ack	command_flag	UINT2	none	%u	ENUM	0	4112	Command acknowledge/answer message from the SCS(0: COMMAND_ACCEPTED), (4097: SCS_MODE_CONFLICT), (4098: SCS_WRONG_NUMBER_OF_PARAMS), (4100: SCS_PARAM_OUT_OF_RANGE), (4104: SCS_UNDEFINED_COMMAND), (4112: SCS_INVALID_VERSION),
1471	tcm_chop_on_off_ack	timestamp	TIME8	seconds	%d.%09d	NUMBER	0	2147483647	time at which the event happened or was captured
1472	tcm_fbc_on_off_ack								acknowledgement/answer to an tcm_fbc_on_off command
1473	tcm_fbc_on_off_ack	packet	BINARY	none	%s	NUMBER			data packet as it was received from the TA
1474	tcm_fbc_on_off_ack	pkt_timestamp	TIME8	seconds	%d.%09d	NUMBER	0	2147483647	time data packet was constructed by TA
1475	tcm_fbc_on_off_ack	command_flag	UINT2	none	%u	ENUM	0	4112	Command acknowledge/answer message from the SCS(0: COMMAND_ACCEPTED), (4097: SCS_MODE_CONFLICT), (4098: SCS_WRONG_NUMBER_OF_PARAMS), (4100: SCS_PARAM_OUT_OF_RANGE), (4104: SCS_UNDEFINED_COMMAND), (4112: SCS_INVALID_VERSION),
1476	tcm_fbc_on_off_ack	timestamp	TIME8	seconds	%d.%09d	NUMBER	0	2147483647	time at which the event happened or was captured
1477	tcm_chopper_ack								acknowledgement/answer to a tcm_chopper command
1478	tcm_chopper_ack	packet	BINARY	none	%s	NUMBER			data packet as it was received from the TA

	A	B	C	D	E	F	G	H	I
1479	tcm_chopper_ack	pkt_timestamp	TIME8	seconds	%d.%09d	NUMBER	0	2147483647	time data packet was constructed by TA
1480	tcm_chopper_ack	command_flag	UINT2	none	%u	ENUM	0	4112	Command acknowledge/answer message from the SCS(0: COMMAND_ACCEPTED), (4097: SCS_MODE_CONFLICT), (4098: SCS_WRONG_NUMBER_OF_PARAMS), (4100: SCS_PARAM_OUT_OF_RANGE), (4104: SCS_UNDEFINED_COMMAND), (4112: SCS_INVALID_VERSION),
1481	tcm_chopper_ack	timestamp	TIME8	seconds	%d.%09d	NUMBER	0	2147483647	time at which the event happened or was captured
1482	tcm_chop_sync_source_ack								acknowledgement/answer to a tcm_chop_sync_source command
1483	tcm_chop_sync_source_ack	packet	BINARY	none	%s	NUMBER			data packet as it was received from the TA
1484	tcm_chop_sync_source_ack	pkt_timestamp	TIME8	seconds	%d.%09d	NUMBER	0	2147483647	time data packet was constructed by TA
1485	tcm_chop_sync_source_ack	command_flag	UINT2	none	%u	ENUM	0	4112	Command acknowledge/answer message from the SCS(0: COMMAND_ACCEPTED), (4097: SCS_MODE_CONFLICT), (4098: SCS_WRONG_NUMBER_OF_PARAMS), (4100: SCS_PARAM_OUT_OF_RANGE), (4104: SCS_UNDEFINED_COMMAND), (4112: SCS_INVALID_VERSION),
1486	tcm_chop_sync_source_ack	timestamp	TIME8	seconds	%d.%09d	NUMBER	0	2147483647	time at which the event happened or was captured
1487	tcm_chop_wf_select_ack								acknowledgement/answer to an tcm_chop_wf_select command
1488	tcm_chop_wf_select_ack	packet	BINARY	none	%s	NUMBER			data packet as it was received from the TA
1489	tcm_chop_wf_select_ack	pkt_timestamp	TIME8	seconds	%d.%09d	NUMBER	0	2147483647	time data packet was constructed by TA
1490	tcm_chop_wf_select_ack	command_flag	UINT2	none	%u	ENUM	0	4112	Command acknowledge/answer message from the SCS(0: COMMAND_ACCEPTED), (4097: SCS_MODE_CONFLICT), (4098: SCS_WRONG_NUMBER_OF_PARAMS), (4100: SCS_PARAM_OUT_OF_RANGE), (4104: SCS_UNDEFINED_COMMAND), (4112: SCS_INVALID_VERSION),
1491	tcm_chop_wf_select_ack	timestamp	TIME8	seconds	%d.%09d	NUMBER	0	2147483647	time at which the event happened or was captured
1492	scs_set_temperature_trigger_ack								acknowledgement/answer to an scs_set_temperature_trigger command
1493	scs_set_temperature_trigger_ack	packet	BINARY	none	%s	NUMBER			data packet as it was received from the TA
1494	scs_set_temperature_trigger_ack	pkt_timestamp	TIME8	seconds	%d.%09d	NUMBER	0	2147483647	time data packet was constructed by TA
1495	scs_set_temperature_trigger_ack	command_flag	UINT2	none	%u	ENUM	0	4112	Command acknowledge/answer message from the SCS(0: COMMAND_ACCEPTED), (4097: SCS_MODE_CONFLICT), (4098: SCS_WRONG_NUMBER_OF_PARAMS), (4100: SCS_PARAM_OUT_OF_RANGE), (4104: SCS_UNDEFINED_COMMAND), (4112: SCS_INVALID_VERSION),
1496	scs_set_temperature_trigger_ack	timestamp	TIME8	seconds	%d.%09d	NUMBER	0	2147483647	time at which the event happened or was captured
1497	scs_state_request_ack								acknowledgement/answer to an scs_state_request command
1498	scs_state_request_ack	packet	BINARY	none	%s	NUMBER			data packet as it was received from the TA

	A	B	C	D	E	F	G	H	I
1499	scs_state_request_ack	pkt_timestamp	TIME8	seconds	%d.%09d	NUMBER	0	2147483647	time data packet was constructed by TA
1500	scs_state_request_ack	command_flag	UINT2	none	%u	ENUM	0	4112	Command acknowledge/answer message from the SCS(0: COMMAND_ACCEPTED), (4097: SCS_MODE_CONFLICT), (4098: SCS_WRONG_NUMBER_OF_PARAMS), (4100: SCS_PARAM_OUT_OF_RANGE), (4104: SCS_UNDEFINED_COMMAND), (4112: SCS_INVALID_VERSION),
1501	scs_state_request_ack	timestamp	TIME8	seconds	%d.%09d	NUMBER	0	2147483647	time at which the event happened or was captured
1502	scs_health_request_ack								acknowledgement/answer to an scs_health_request command
1503	scs_health_request_ack	packet	BINARY	none	%s	NUMBER			data packet as it was received from the TA
1504	scs_health_request_ack	pkt_timestamp	TIME8	seconds	%d.%09d	NUMBER	0	2147483647	time data packet was constructed by TA
1505	scs_health_request_ack	command_flag	UINT2	none	%u	ENUM	0	4112	Command acknowledge/answer message from the SCS(0: COMMAND_ACCEPTED), (4097: SCS_MODE_CONFLICT), (4098: SCS_WRONG_NUMBER_OF_PARAMS), (4100: SCS_PARAM_OUT_OF_RANGE), (4104: SCS_UNDEFINED_COMMAND), (4112: SCS_INVALID_VERSION),
1506	scs_health_request_ack	timestamp	TIME8	seconds	%d.%09d	NUMBER	0	2147483647	time at which the event happened or was captured
1507	scs_status_subscribe_ack								acknowledgement/answer to an scs_status_subscribe command
1508	scs_status_subscribe_ack	packet	BINARY	none	%s	NUMBER			data packet as it was received from the TA
1509	scs_status_subscribe_ack	pkt_timestamp	TIME8	seconds	%d.%09d	NUMBER	0	2147483647	time data packet was constructed by TA
1510	scs_status_subscribe_ack	command_flag	UINT2	none	%u	ENUM	0	4112	Command acknowledge/answer message from the SCS(0: COMMAND_ACCEPTED), (4097: SCS_MODE_CONFLICT), (4098: SCS_WRONG_NUMBER_OF_PARAMS), (4100: SCS_PARAM_OUT_OF_RANGE), (4104: SCS_UNDEFINED_COMMAND), (4112: SCS_INVALID_VERSION),
1511	scs_status_subscribe_ack	timestamp	TIME8	seconds	%d.%09d	NUMBER	0	2147483647	time at which the event happened or was captured
1512	scs_status_unsubscribe_ack								acknowledgement/answer to an scs_status_unsubscribe command
1513	scs_status_unsubscribe_ack	packet	BINARY	none	%s	NUMBER			data packet as it was received from the TA
1514	scs_status_unsubscribe_ack	pkt_timestamp	TIME8	seconds	%d.%09d	NUMBER	0	2147483647	time data packet was constructed by TA
1515	scs_status_unsubscribe_ack	command_flag	UINT2	none	%u	ENUM	0	4112	Command acknowledge/answer message from the SCS(0: COMMAND_ACCEPTED), (4097: SCS_MODE_CONFLICT), (4098: SCS_WRONG_NUMBER_OF_PARAMS), (4100: SCS_PARAM_OUT_OF_RANGE), (4104: SCS_UNDEFINED_COMMAND), (4112: SCS_INVALID_VERSION),
1516	scs_status_unsubscribe_ack	timestamp	TIME8	seconds	%d.%09d	NUMBER	0	2147483647	time at which the event happened or was captured
1517	maint_set_trace_ack								acknowledgement/answer to an maint_set_trace command
1518	maint_set_trace_ack	packet	BINARY	none	%s	NUMBER			data packet as it was received from the TA

	A	B	C	D	E	F	G	H	I
1519	maint_set_trace_ack	pkt_timestamp	TIME8	seconds	%d.%09d	NUMBER	0	2147483647	time data packet was constructed by TA
1520	maint_set_trace_ack	command_flag	UINT2	none	%u	ENUM	0	4112	Command acknowledge/answer message from the SCS(0: COMMAND_ACCEPTED), (4097: SCS_MODE_CONFLICT), (4098: SCS_WRONG_NUMBER_OF_PARAMS), (4100: SCS_PARAM_OUT_OF_RANGE), (4104: SCS_UNDEFINED_COMMAND), (4112: SCS_INVALID_VERSION),
1521	maint_set_trace_ack	timestamp	TIME8	seconds	%d.%09d	NUMBER	0	2147483647	time at which the event happened or was captured
1522	maint_send_pmac_cmd_ ack								acknowledgement/answer to an maint_send_pmac_cmd command
1523	maint_send_pmac_cmd_ ack	packet	BINARY	none	%s	NUMBER			data packet as it was received from the TA
1524	maint_send_pmac_cmd_ ack	pkt_timestamp	TIME8	seconds	%d.%09d	NUMBER	0	2147483647	time data packet was constructed by TA
1525	maint_send_pmac_cmd_ ack	command_flag	UINT2	none	%u	ENUM	0	4112	Command acknowledge/answer message from the SCS(0: COMMAND_ACCEPTED), (4097: SCS_MODE_CONFLICT), (4098: SCS_WRONG_NUMBER_OF_PARAMS), (4100: SCS_PARAM_OUT_OF_RANGE), (4104: SCS_UNDEFINED_COMMAND), (4112: SCS_INVALID_VERSION),
1526	maint_send_pmac_cmd_ ack	timestamp	TIME8	seconds	%d.%09d	NUMBER	0	2147483647	time at which the event happened or was captured
1527	scs_health_status								the composite health status of the SCS
1528	scs_health_status	packet	BINARY	none	%s	NUMBER			data packet as it was received from the TA
1529	scs_health_status	pkt_timestamp	TIME8	seconds	%d.%09d	NUMBER	0	2147483647	time data packet was constructed by TA
1530	scs_health_status	command_flag	UINT2	none	%u	ENUM	0	4112	Command acknowledge/answer message from the SCS(0: COMMAND_ACCEPTED), (4097: SCS_MODE_CONFLICT), (4098: SCS_WRONG_NUMBER_OF_PARAMS), (4100: SCS_PARAM_OUT_OF_RANGE), (4104: SCS_UNDEFINED_COMMAND), (4112: SCS_INVALID_VERSION),
1531	scs_health_status	timestamp	TIME8	seconds	%d.%09d	NUMBER	0	2147483647	time at which the event happened or was captured
1532	scs_health_status	scs_global_health_status	UINT1	none	%u	ENUM	0	2	Overall status of the SCS. OPERATIONAL indicates no errors detected, DEGRADED indicates some errors detected but functionality is still available, and NON_OPERATIONAL indicates a fatal error has been detected.(0: OPERATIONAL), (1: DEGRADED), (2: NON_OPERATIONAL),
1533	scs_health_status	scs_fault_location_status	UINT2	none	%u	BIT	0	65535	Indicates a system fault or faults with the FCM and TCM actuators(0: SYSTEM_FAILURE), (1: FCM_ACTUATOR_1), (2: FCM_ACTUATOR_2), (3: FCM_ACTUATOR_3), (4: FCM_ACTUATOR_4), (5: FCM_ACTUATOR_5), (6: FCM_ACTUATOR_6), (7: TCM_ACTUATOR_1), (8: TCM_ACTUATOR_2), (9: TCM_ACTUATOR_3),

	A	B	C	D	E	F	G	H	I
1534	scs_health_status	scs_fault_diagnostic_status	UINT4	none	%u	BIT	0	4294967295	Provides diagnostic information for system faults or for faults with the FCM and TCM actuators(0: FCM_ACTUATOR_1_S0), (1: FCM_ACTUATOR_1_S1), (2: FCM_ACTUATOR_1_S2), (3: FCM_ACTUATOR_2_S0), (4: FCM_ACTUATOR_2_S1), (5: FCM_ACTUATOR_2_S2), (6: FCM_ACTUATOR_3_S0), (7: FCM_ACTUATOR_3_S1), (8: FCM_ACTUATOR_3_S2), (9: FCM_ACTUATOR_4_S0), (10: FCM_ACTUATOR_4_S1), (11: FCM_ACTUATOR_4_S2), (12: FCM_ACTUATOR_5_S0), (13: FCM_ACTUATOR_5_S1), (14: FCM_ACTUATOR_5_S2), (15: FCM_ACTUATOR_6_S0), (16: FCM_ACTUATOR_6_S1), (17: FCM_ACTUATOR_6_S2), (18: TCM_ACTUATOR_1_S0), (19: TCM_ACTUATOR_1_S1), (20: TCM_ACTUATOR_1_S2), (21: TCM_ACTUATOR_2_S0), (22: TCM_ACTUATOR_2_S1), (23: TCM_ACTUATOR_2_S2), (24: TCM_ACTUATOR_3_S0), (25: TCM_ACTUATOR_3_S1), (26: TCM_ACTUATOR_3_S2), (27: NON_FATAL_ERROR_S0), (28: NON_FATAL_ERROR_S1), (29: FATAL_ERROR_S0), (30: FATAL_ERROR_S1), (31: FATAL_ERROR_S2),
1535	scs_composite_status								the composite state of the SCS
1536	scs_composite_status	packet	BINARY	none	%s	NUMBER			data packet as it was received from the TA
1537	scs_composite_status	pkt_timestamp	TIME8	seconds	%d.%09d	NUMBER	0	2147483647	time data packet was constructed by TA
1538	scs_composite_status	command_flag	UINT2	none	%u	ENUM	0	4112	Command acknowledge/answer message from the SCS(0: COMMAND_ACCEPTED), (4097: SCS_MODE_CONFLICT), (4098: SCS_WRONG_NUMBER_OF_PARAMS), (4100: SCS_PARAM_OUT_OF_RANGE), (4104: SCS_UNDEFINED_COMMAND), (4112: SCS_INVALID_VERSION),
1539	scs_composite_status	timestamp	TIME8	seconds	%d.%09d	NUMBER	0	2147483647	time at which the event happened or was captured
1540	scs_composite_status	scs_power_status	UINT1	none	%u	ENUM	0	1	Indicates whether power is currently applied to the TCM and FCM electronics(0: OFF), (1: ON),
1541	scs_composite_status	scs_input_voltage_status	UINT1	none	%u	BIT	0	255	Voltage status of the FCM and TCM power supply (a bit set to 0 = OK, a bit set to 1 = ERROR)(0: FCM_AC_OK_SIGNAL), (1: FCM_DC_OK_SIGNAL), (2: FCM_PA_OK_SIGNAL), (3: SPARE), (4: TCM_AC_OK_SIGNAL), (5: TCM_DC_OK_SIGNAL), (6: TCM_PA_OK_SIGNAL), (7: SPARE),
1542	scs_composite_status	scs_input_current_status	UINT1	none	%u	BIT	0	255	Current status of the FCM and TCM power supply (a bit set to 0 = OK, a bit set to 1 = ERROR)(0: FCM_AC_OK_SIGNAL), (1: FCM_DC_OK_SIGNAL), (2: FCM_PA_OK_SIGNAL), (3: SPARE), (4: TCM_AC_OK_SIGNAL), (5: TCM_DC_OK_SIGNAL), (6: TCM_PA_OK_SIGNAL), (7: SPARE),
1543	scs_composite_status	scs_state_status	UINT1	none	%u	BIT	0	255	State of the SCS electronics. Bits 0-2 indicate the current SMA state, which is defined as follows: 0 = EXTERNAL_POWER, 1 = INITIALIZED, 2 = READY_OPEN_LOOP, 3 = READY_CLOSED_LOOP, 4 = PARKED, 5 = FAILED(0: SCS_STATE_S0), (1: SCS_STATE_S1), (2: SCS_STATE_S2), (3: TCM_ELECTRONICS_CALIBRATION), (4: DUMPING_ENGINEERING_DATA), (5: SENDING_ENGINEERING_DATA), (6: BUILT_IN_TEST), (7: SPARE),

	A	B	C	D	E	F	G	H	I
1544	scs_composite_status	scs_sm_installed_status	UINT1	none	%u	ENUM	0	1	Indicates whether the secondary mirror is installed in the SCS. TRUE means the sensor has detected the presence of the mirror in the mounting fixture. FALSE means that the sensor does not detect the presence of the mirror.(0: FALSE), (1: TRUE),
1545	fcm_actuator_position_status								measured position of each of the SCS hexapod actuators
1546	fcm_actuator_position_status	packet	BINARY	none	%s	NUMBER			data packet as it was received from the TA
1547	fcm_actuator_position_status	pkt_timestamp	TIME8	seconds	%d.%09d	NUMBER	0	2147483647	time data packet was constructed by TA
1548	fcm_actuator_position_status	command_flag	UINT2	none	%u	ENUM	0	4112	Command acknowledge/answer message from the SCS(0: COMMAND_ACCEPTED), (4097: SCS_MODE_CONFLICT), (4098: SCS_WRONG_NUMBER_OF_PARAMS), (4100: SCS_PARAM_OUT_OF_RANGE), (4104: SCS_UNDEFINED_COMMAND), (4112: SCS_INVALID_VERSION),
1549	fcm_actuator_position_status	timestamp	TIME8	seconds	%d.%09d	NUMBER	0	2147483647	time at which the event happened or was captured
1550	fcm_actuator_position_status	fcm_actuator_1_position	INT4	micrometers	%d	NUMBER	-5000	5000	Absolute position of SCS hexapod actuator 1 in actuator increments relative to position 0.0 in center of range of travel
1551	fcm_actuator_position_status	fcm_actuator_2_position	INT4	micrometers	%d	NUMBER	-5000	5000	Absolute position of SCS hexapod actuator 2 in actuator increments relative to position 0.0 in center of range of travel
1552	fcm_actuator_position_status	fcm_actuator_3_position	INT4	micrometers	%d	NUMBER	-5000	5000	Absolute position of SCS hexapod actuator 3 in actuator increments relative to position 0.0 in center of range of travel
1553	fcm_actuator_position_status	fcm_actuator_4_position	INT4	micrometers	%d	NUMBER	-5000	5000	Absolute position of SCS hexapod actuator 4 in actuator increments relative to position 0.0 in center of range of travel
1554	fcm_actuator_position_status	fcm_actuator_5_position	INT4	micrometers	%d	NUMBER	-5000	5000	Absolute position of SCS hexapod actuator 5 in actuator increments relative to position 0.0 in center of range of travel
1555	fcm_actuator_position_status	fcm_actuator_6_position	INT4	micrometers	%d	NUMBER	-5000	5000	Absolute position of SCS hexapod actuator 6 in actuator increments relative to position 0.0 in center of range of travel
1556	tcm_chopper_status								the current values set for each of the TCM Chopper parameters
1557	tcm_chopper_status	packet	BINARY	none	%s	NUMBER			data packet as it was received from the TA
1558	tcm_chopper_status	pkt_timestamp	TIME8	seconds	%d.%09d	NUMBER	0	2147483647	time data packet was constructed by TA
1559	tcm_chopper_status	command_flag	UINT2	none	%u	ENUM	0	4112	Command acknowledge/answer message from the SCS(0: COMMAND_ACCEPTED), (4097: SCS_MODE_CONFLICT), (4098: SCS_WRONG_NUMBER_OF_PARAMS), (4100: SCS_PARAM_OUT_OF_RANGE), (4104: SCS_UNDEFINED_COMMAND), (4112: SCS_INVALID_VERSION),
1560	tcm_chopper_status	timestamp	TIME8	seconds	%d.%09d	NUMBER	0	2147483647	time at which the event happened or was captured
1561	tcm_chopper_status	tcm_frequency	FLOAT4	hertz	%lf	NUMBER	0	20	Measured TCM chop frequency
1562	tcm_chopper_status	tcm_settling_time	FLOAT4	milliseconds	%lf	NUMBER	1	100	Applied settling time from the amplitude-settling time profile or specified most recently with TCM_DES_SETTLING_TIME
1563	tcm_chopper_status	tcm_amplitude_1	FLOAT4	arcseconds	%lf	NUMBER	-1125	1125	Measured TCM chop amplitude as the angle between the chop mid set-point and the positive set-point, specified as mirror angular displacements about the chop axis
1564	tcm_chopper_status	tcm_amplitude_2	FLOAT4	arcseconds	%lf	NUMBER	-1125	1125	Measured TCM chop amplitude as the angle between the chop mid set-point and the negative set-point, specified as mirror angular displacements about the chop axis

	A	B	C	D	E	F	G	H	I
1565	tcm_chopper_status	tcm_profile	UINT1	none	%u	ENUM	0	1	Indicates whether a 2 or 3 point chopping profile is being used(0: TWO_POINT), (1: THREE_POINT),
1566	tcm_chopper_status	tcm_tip	FLOAT4	arcseconds	%lf	NUMBER	-1125	1125	Measured displacement phi R of the chop throw zero point from the boresight position in the R axis (Elevation)
1567	tcm_chopper_status	tcm_tilt	FLOAT4	arcseconds	%lf	NUMBER	-1125	1125	Measured displacement phi S of the chop throw zero point from the boresight position in the S axis (Cross-Elevation)
1568	tcm_chopper_status	tcm_angle	FLOAT4	degrees	%lf	NUMBER	0	360	Measured angle between the chop axis and the R axis in the R,S plane
1569	tcm_chopper_status	tcm_phase	UINT2	milliseconds	%u	NUMBER	0	1000	Time delay between the synch signal and the start of the setpoint which has the positive tilt increment with respect to the commanded offset
1570	tcm_chopper_status	tcm_sync_source	UINT1	none	%u	ENUM	0	1	Indicates the use of either the internal chop synch signal (INTERNAL) or an external TTL chop sync signal (EXTERNAL)(0: INTERNAL), (1: EXTERNAL),
1571	tcm_chopper_status	tcm_wf_enable_status	UINT1	none	%u	ENUM	0	1	Indicates the use of an internal or external chop waveform. INTERNAL means the TCM will use the TCM_CHOP configuration settings to control the chopper. EXTERNAL means the chopper motion will be controlled by an external analog signal.(0: INTERNAL), (1: EXTERNAL),
1572	scs_temperature_status								temperature as measured by each of the SCS temperature sensors
1573	scs_temperature_status	packet	BINARY	none	%s	NUMBER			data packet as it was received from the TA
1574	scs_temperature_status	pkt_timestamp	TIME8	seconds	%d.%09d	NUMBER	0	2147483647	time data packet was constructed by TA
1575	scs_temperature_status	command_flag	UINT2	none	%u	ENUM	0	4112	Command acknowledge/answer message from the SCS(0: COMMAND_ACCEPTED), (4097: SCS_MODE_CONFLICT), (4098: SCS_WRONG_NUMBER_OF_PARAMS), (4100: SCS_PARAM_OUT_OF_RANGE), (4104: SCS_UNDEFINED_COMMAND), (4112: SCS_INVALID_VERSION),
1576	scs_temperature_status	timestamp	TIME8	seconds	%d.%09d	NUMBER	0	2147483647	time at which the event happened or was captured
1577	scs_temperature_status	sensor_1_temp	FLOAT4	degrees Celsius	%lf	NUMBER	-55	125	FCM actuator #1 temperature
1578	scs_temperature_status	sensor_2_temp	FLOAT4	degrees Celsius	%lf	NUMBER	-55	125	FCM actuator #2 temperature
1579	scs_temperature_status	sensor_3_temp	FLOAT4	degrees Celsius	%lf	NUMBER	-55	125	FCM actuator #3 temperature
1580	scs_temperature_status	sensor_4_temp	FLOAT4	degrees Celsius	%lf	NUMBER	-55	125	FCM actuator #4 temperature
1581	scs_temperature_status	sensor_5_temp	FLOAT4	degrees Celsius	%lf	NUMBER	-55	125	FCM actuator #5 temperature
1582	scs_temperature_status	sensor_6_temp	FLOAT4	degrees Celsius	%lf	NUMBER	-55	125	FCM actuator #6 temperature
1583	scs_temperature_status	sensor_7_temp	FLOAT4	degrees Celsius	%lf	NUMBER	-55	125	TCM actuator #1 temperature
1584	scs_temperature_status	sensor_8_temp	FLOAT4	degrees Celsius	%lf	NUMBER	-55	125	TCM actuator #2 temperature
1585	scs_temperature_status	sensor_9_temp	FLOAT4	degrees Celsius	%lf	NUMBER	-55	125	TCM actuator #3 temperature

	A	B	C	D	E	F	G	H	I
1586	scs_temperature_status	sensor_10_temp	FLOAT4	degrees Celsius	%lf	NUMBER	-55	125	SCS temperature
1587	scs_actuator_current_status								measured actuator instantaneous current for each of the SCS actuators (FCM and TCM)
1588	scs_actuator_current_status	packet	BINARY	none	%s	NUMBER			data packet as it was received from the TA
1589	scs_actuator_current_status	pkt_timestamp	TIME8	seconds	%d.%09d	NUMBER	0	2147483647	time data packet was constructed by TA
1590	scs_actuator_current_status	command_flag	UINT2	none	%u	ENUM	0	4112	Command acknowledge/answer message from the SCS(0: COMMAND_ACCEPTED), (4097: SCS_MODE_CONFLICT), (4098: SCS_WRONG_NUMBER_OF_PARAMS), (4100: SCS_PARAM_OUT_OF_RANGE), (4104: SCS_UNDEFINED_COMMAND), (4112: SCS_INVALID_VERSION),
1591	scs_actuator_current_status	timestamp	TIME8	seconds	%d.%09d	NUMBER	0	2147483647	time at which the event happened or was captured
1592	scs_actuator_current_status	scs_actuator_1_current	FLOAT4	amperes	%lf	NUMBER	-4	4	FCM actuator #1 current
1593	scs_actuator_current_status	scs_actuator_2_current	FLOAT4	amperes	%lf	NUMBER	-4	4	FCM actuator #2 current
1594	scs_actuator_current_status	scs_actuator_3_current	FLOAT4	amperes	%lf	NUMBER	-4	4	FCM actuator #3 current
1595	scs_actuator_current_status	scs_actuator_4_current	FLOAT4	amperes	%lf	NUMBER	-4	4	FCM actuator #4 current
1596	scs_actuator_current_status	scs_actuator_5_current	FLOAT4	amperes	%lf	NUMBER	-4	4	FCM actuator #5 current
1597	scs_actuator_current_status	scs_actuator_6_current	FLOAT4	amperes	%lf	NUMBER	-4	4	FCM actuator #6 current
1598	scs_actuator_current_status	scs_actuator_7_current	FLOAT4	amperes	%lf	NUMBER	-4	4	TCM actuator #1 current
1599	scs_actuator_current_status	scs_actuator_8_current	FLOAT4	amperes	%lf	NUMBER	-4	4	TCM actuator #2 current
1600	scs_actuator_current_status	scs_actuator_9_current	FLOAT4	amperes	%lf	NUMBER	-4	4	TCM actuator #3 current
1601	fcm_position_status								indicates the FCM composite move position of the focus/center mechanism
1602	fcm_position_status	packet	BINARY	none	%s	NUMBER			data packet as it was received from the TA
1603	fcm_position_status	pkt_timestamp	TIME8	seconds	%d.%09d	NUMBER	0	2147483647	time data packet was constructed by TA
1604	fcm_position_status	command_flag	UINT2	none	%u	ENUM	0	4112	Command acknowledge/answer message from the SCS(0: COMMAND_ACCEPTED), (4097: SCS_MODE_CONFLICT), (4098: SCS_WRONG_NUMBER_OF_PARAMS), (4100: SCS_PARAM_OUT_OF_RANGE), (4104: SCS_UNDEFINED_COMMAND), (4112: SCS_INVALID_VERSION),
1605	fcm_position_status	timestamp	TIME8	seconds	%d.%09d	NUMBER	0	2147483647	time at which the event happened or was captured
1606	fcm_position_status	fcm_tip	FLOAT4	arcseconds	%lf	NUMBER	-1800	1800	Measured FCM bias phi R of the mirror 0 point in the tip (EL) axis
1607	fcm_position_status	fcm_tilt	FLOAT4	arcseconds	%lf	NUMBER	-1800	1800	Measured FCM bias phi S of the mirror 0 point in the tilt (XEL) axis

	A	B	C	D	E	F	G	H	I
1608	fcm_position_status	fcm_focus	INT4	micrometers	%d	NUMBER	-5000	5000	Measured position of the FCM focus mechanism in the T direction. This is a calculated value from hexapod position sensors which do not measure in an orthogonal coordinate system.
1609	fcm_position_status	fcm_el	INT4	micrometers	%d	NUMBER	-5000	5000	Measured FCM mirror translation in the R direction. This is a calculated value from hexapod position sensors which do not measure in an orthogonal coordinate system.
1610	fcm_position_status	fcm_xel	INT4	micrometers	%d	NUMBER	-5000	5000	Measured FCM mirror translation in the S direction. This is a calculated value from hexapod position sensors which do not measure in an orthogonal coordinate system.
1611	fcm_actuator_alarm								indicates that the indicated FCM hexapod actuator has reached a motion limit
1612	fcm_actuator_alarm	packet	BINARY	none	%s	NUMBER			data packet as it was received from the TA
1613	fcm_actuator_alarm	pkt_timestamp	TIME8	seconds	%d.%09d	NUMBER	0	2147483647	time data packet was constructed by TA
1614	fcm_actuator_alarm	command_flag	UINT2	none	%u	ENUM	0	4112	Command acknowledge/answer message from the SCS(0: COMMAND_ACCEPTED), (4097: SCS_MODE_CONFLICT), (4098: SCS_WRONG_NUMBER_OF_PARAMS), (4100: SCS_PARAM_OUT_OF_RANGE), (4104: SCS_UNDEFINED_COMMAND), (4112: SCS_INVALID_VERSION),
1615	fcm_actuator_alarm	timestamp	TIME8	seconds	%d.%09d	NUMBER	0	2147483647	time at which the event happened or was captured
1616	fcm_actuator_alarm	scs_actuator_id	UINT1	none	%u	NUMBER	1	9	Number identifying one of the FCM actuators
1617	tcm_actuator_alarm								indicates that the indicated TCM actuator has reached a motion limit
1618	tcm_actuator_alarm	packet	BINARY	none	%s	NUMBER			data packet as it was received from the TA
1619	tcm_actuator_alarm	pkt_timestamp	TIME8	seconds	%d.%09d	NUMBER	0	2147483647	time data packet was constructed by TA
1620	tcm_actuator_alarm	command_flag	UINT2	none	%u	ENUM	0	4112	Command acknowledge/answer message from the SCS(0: COMMAND_ACCEPTED), (4097: SCS_MODE_CONFLICT), (4098: SCS_WRONG_NUMBER_OF_PARAMS), (4100: SCS_PARAM_OUT_OF_RANGE), (4104: SCS_UNDEFINED_COMMAND), (4112: SCS_INVALID_VERSION),
1621	tcm_actuator_alarm	timestamp	TIME8	seconds	%d.%09d	NUMBER	0	2147483647	time at which the event happened or was captured
1622	tcm_actuator_alarm	scs_actuator_id	UINT1	none	%u	NUMBER	1	9	Number identifying one of the TCM actuators
1623	scs_temperature_alarm								indicates that the indicated SCS temperature sensor has measured an over temperature condition
1624	scs_temperature_alarm	packet	BINARY	none	%s	NUMBER			data packet as it was received from the TA
1625	scs_temperature_alarm	pkt_timestamp	TIME8	seconds	%d.%09d	NUMBER	0	2147483647	time data packet was constructed by TA
1626	scs_temperature_alarm	command_flag	UINT2	none	%u	ENUM	0	4112	Command acknowledge/answer message from the SCS(0: COMMAND_ACCEPTED), (4097: SCS_MODE_CONFLICT), (4098: SCS_WRONG_NUMBER_OF_PARAMS), (4100: SCS_PARAM_OUT_OF_RANGE), (4104: SCS_UNDEFINED_COMMAND), (4112: SCS_INVALID_VERSION),
1627	scs_temperature_alarm	timestamp	TIME8	seconds	%d.%09d	NUMBER	0	2147483647	time at which the event happened or was captured
1628	scs_temperature_alarm	scs_temperature_sensor_id	UINT1	none	%u	NUMBER	1	10	Number identifying one of the temperature sensors

	A	B	C	D	E	F	G	H	I
1629	scs_actuator_current_alarm								indicates that the indicated SCS actuator has reached an over current condition
1630	scs_actuator_current_alarm	packet	BINARY	none	%s	NUMBER			data packet as it was received from the TA
1631	scs_actuator_current_alarm	pkt_timestamp	TIME8	seconds	%d.%09d	NUMBER	0	2147483647	time data packet was constructed by TA
1632	scs_actuator_current_alarm	command_flag	UINT2	none	%u	ENUM	0	4112	Command acknowledge/answer message from the SCS(0: COMMAND_ACCEPTED), (4097: SCS_MODE_CONFLICT), (4098: SCS_WRONG_NUMBER_OF_PARAMS), (4100: SCS_PARAM_OUT_OF_RANGE), (4104: SCS_UNDEFINED_COMMAND), (4112: SCS_INVALID_VERSION),
1633	scs_actuator_current_alarm	timestamp	TIME8	seconds	%d.%09d	NUMBER	0	2147483647	time at which the event happened or was captured
1634	scs_actuator_current_alarm	scs_actuator_id	UINT1	none	%u	NUMBER	1	9	Number identifying one of the TCM or FCM actuators
1635	scs_system_failure_alarm								indicates that an SCS fatal error has occurred
1636	scs_system_failure_alarm	packet	BINARY	none	%s	NUMBER			data packet as it was received from the TA
1637	scs_system_failure_alarm	pkt_timestamp	TIME8	seconds	%d.%09d	NUMBER	0	2147483647	time data packet was constructed by TA
1638	scs_system_failure_alarm	command_flag	UINT2	none	%u	ENUM	0	4112	Command acknowledge/answer message from the SCS(0: COMMAND_ACCEPTED), (4097: SCS_MODE_CONFLICT), (4098: SCS_WRONG_NUMBER_OF_PARAMS), (4100: SCS_PARAM_OUT_OF_RANGE), (4104: SCS_UNDEFINED_COMMAND), (4112: SCS_INVALID_VERSION),
1639	scs_system_failure_alarm	timestamp	TIME8	seconds	%d.%09d	NUMBER	0	2147483647	time at which the event happened or was captured
1640	scs_system_failure_alarm	scs_system_failure_id	UINT1	none	%u	BIT	0	7	Number identifying one or more SCS system failures(0: FATAL_ERROR_S0), (1: FATAL_ERROR_S1), (2: FATAL_ERROR_S2), (3: SPARE), (4: SPARE), (5: SPARE), (6: SPARE), (7: SPARE),
1641	maint_send_pmac_resp								Response message associated with maint_send_pmac_cmd command
1642	maint_send_pmac_resp	packet	BINARY	none	%s	NUMBER			data packet as it was received from the TA
1643	maint_send_pmac_resp	pkt_timestamp	TIME8	seconds	%d.%09d	NUMBER	0	2147483647	time data packet was constructed by TA
1644	maint_send_pmac_resp	command_flag	UINT2	none	%u	ENUM	0	4112	Command acknowledge/answer message from the SCS(0: COMMAND_ACCEPTED), (4097: SCS_MODE_CONFLICT), (4098: SCS_WRONG_NUMBER_OF_PARAMS), (4100: SCS_PARAM_OUT_OF_RANGE), (4104: SCS_UNDEFINED_COMMAND), (4112: SCS_INVALID_VERSION),
1645	maint_send_pmac_resp	timestamp	TIME8	seconds	%d.%09d	NUMBER	0	2147483647	time at which the event happened or was captured
1646	maint_send_pmac_resp	pmac_resp	STRING	N/A	%s	NUMBER			PMAC response message
1647	**ta_state** **Data produced by the TA State Commandable**								
1648	**HK NAME**	**Name**	**Rep**	**Units**	**Format**	**Form**	**lo_lim**	**hi_lim**	**Description**
1649	rcs_id		STRING	N/A	%s	NUMBER			Version information for the XML file that defines this data source

	A	B	C	D	E	F	G	H	I
1650	archive_info								Archive Info
1651	archive_info	archive_status	BOOL4	none	%s	ENUM	0	1	(0: false), (1: true),
1652	archive_info	current_bytes_archived	FLOAT8	none	%1f	NUMBER	0		Total bytes written to the current ark file
1653	archive_info	total_bytes_archived	FLOAT8	none	%1f	NUMBER	0		Total bytes written since this data source starts
1654	archive_info	archive_file_name	STRING	none	%s	NUMBER			Archive file name
1655	archive_nsamples								Archive nth sample for data groups, the part before the _nsample must match the data group node name
1656	archive_nsamples	current_bytes_archived_nsample	INT4	N/A	%d	NUMBER	0		
1657	archive_nsamples	total_bytes_archived_nsample	INT4	N/A	%d	NUMBER	0		
1658	archive_nsamples	fd_deg_el_nsample	INT4	N/A	%d	NUMBER	0		
1659	archive_nsamples	fd_deg_xel_nsample	INT4	N/A	%d	NUMBER	0		
1660	archive_nsamples	fd_deg_los_nsample	INT4	N/A	%d	NUMBER	0		
1661	archive_nsamples	coarse_deg_el_nsample	INT4	N/A	%d	NUMBER	0		
1662	archive_nsamples	ta_deg_el_nsample	INT4	N/A	%d	NUMBER	0		
1663	archive_nsamples	ta_deg_xel_nsample	INT4	N/A	%d	NUMBER	0		
1664	archive_nsamples	ta_deg_los_nsample	INT4	N/A	%d	NUMBER	0		
1665	archive_nsamples	irf_deg_el_nsample	INT4	N/A	%d	NUMBER	0		
1666	archive_nsamples	irf_deg_xel_nsample	INT4	N/A	%d	NUMBER	0		
1667	archive_nsamples	irf_deg_los_nsample	INT4	N/A	%d	NUMBER	0		
1668	archive_nsamples	ra_nsample	INT4	N/A	%d	NUMBER	0		
1669	archive_nsamples	dec_nsample	INT4	N/A	%d	NUMBER	0		
1670	archive_nsamples	vpa_nsample	INT4	N/A	%d	NUMBER	0		
1671	archive_nsamples	rof_nsample	INT4	N/A	%d	NUMBER	0		
1672	commands		STRING	N/A	%s	NUMBER			Contains the last SCL command sent to ta_state
1673	responses								Contains SCL responses for ta_state commands
1674	responses	resume	STRING	N/A	%s	NUMBER			Last SCL response sent back to the issuer of the resume command
1675	responses	suspend	STRING	N/A	%s	NUMBER			Last SCL response sent back to the issuer of the suspend command
1676	responses	set	STRING	N/A	%s	NUMBER			Last SCL response sent back to the issuer of the set command
1677	responses	verbose	STRING	N/A	%s	NUMBER			Last SCL response sent back to the issuer of the verbose command
1678	responses	quiet	STRING	N/A	%s	NUMBER			Last SCL response sent back to the issuer of the quiet command
1679	responses	startup	STRING	N/A	%s	NUMBER			Last SCL response sent back to the issuer of the startup command
1680	responses	servo	STRING	N/A	%s	NUMBER			Last SCL response sent back to the issuer of the servo command
1681	responses	camera	STRING	N/A	%s	NUMBER			Last SCL response sent back to the issuer of the servo command
1682	responses	standby	STRING	N/A	%s	NUMBER			Last SCL response sent back to the issuer of the standby command
1683	responses	cage	STRING	N/A	%s	NUMBER			Last SCL response sent back to the issuer of the cage command
1684	responses	iqc	STRING	N/A	%s	NUMBER			Last SCL response sent back to the issuer of the iqc command
1685	responses	shutdown	STRING	N/A	%s	NUMBER			Last SCL response sent back to the issuer of the shutdown command
1686	ta_state_alert								Alert produced by the TA State Commandable
1687	ta_state_alert	ta_state_alert_info	STRING		%s	NUMBER			Informational messages (events)
1688	ta_state_alert	ta_state_alert_warning	STRING		%s	NUMBER			Events requiring user action for recovery
1689	ta_state_alert_ta_state_alert_warning	rewind							

	A	B	C	D	E	F	G	H	I
1690	ta_state_alert_ta_state_alert_warning	iqc							
1691	ta_state_alert	ta_state_alert_error	STRING		%s	NUMBER			Non-recoverable problems which are not fatal
1692	ta_state_alert	ta_state_alert_fatal	STRING		%s	NUMBER			Fatal problems
1693	ta_state_alert_ta_state_alert_fatal	xel_los							
1694	ta_state_alarm								Alarm produced by the TA State Commandable
1695	ta_state_alarm	ta_state_alarm_info	STRING		%s	NUMBER			Normal events requiring user confirmation
1696	ta_state_alarm	ta_state_alarm_warning	STRING		%s	NUMBER			Abnormal events requiring user confirmation
1697	ta_state_alarm	ta_state_alarm_error	STRING		%s	NUMBER			Serious problems requiring user confirmation
1698	ta_state_alarm_ta_state_alarm_error	los							
1699	ta_state_alarm	ta_state_alarm_fatal	STRING		%s	NUMBER			Fatal problems requiring user confirmation
1700	position		STRING		%s	NUMBER			Where the telescope is (or what it is doing)
1701	fd_deg_el		FLOAT8	degrees	%lf	NUMBER	-3	3	Fine drive elevation
1702	fd_deg_xel		FLOAT8	degrees	%lf	NUMBER	-3	3	Fine drive cross-elevation
1703	fd_deg_los		FLOAT8	degrees	%lf	NUMBER	-3	3	Fine drive Line of Sight
1704	coarse_deg_el		FLOAT8	degrees	%.8lf	NUMBER	15	70	Coarse drive elevation
1705	ta_deg_el		FLOAT8	degrees	%lf	NUMBER	15	70	Total elevation
1706	ta_deg_xel		FLOAT8	degrees	%lf	NUMBER	-3	3	Total drive cross-elevation
1707	ta_deg_los		FLOAT8	degrees	%lf	NUMBER	-3	3	Total drive Line of Sight
1708	irf_deg_el		FLOAT8	degrees	%lf	NUMBER			TARF-IRF elevation
1709	irf_deg_xel		FLOAT8	degrees	%lf	NUMBER			TARF-IRF drive cross-elevation
1710	irf_deg_los		FLOAT8	degrees	%lf	NUMBER			TARF-IRF drive Line of Sight
1711	fd_lock_time		FLOAT8	seconds	%lf	NUMBER	0		Time when the fine drive became locked
1712	fbc_el_stdev		FLOAT8		%lf	NUMBER			sigma(EL) for the FBC correction
1713	fbc_xel_stdev		FLOAT8		%lf	NUMBER			sigma(XEL) for the FBC correction
1714	ra								Right Ascension of the current Boresight (here)
1715	ra	rate	FLOAT8	sidereal hours per second	%lf	NUMBER			d(RA)/dt for the boresight
1716	ra	stdev	FLOAT8		%lf	NUMBER			sigma(RA) for the boresight
1717	dec								Declination of the current Boresight (here)
1718	dec	rate	FLOAT8	degrees per second	%lf	NUMBER			d(dec)/dt for the boresight
1719	dec	stdev	FLOAT8		%lf	NUMBER			sigma(dec) for the boresight
1720	vpa								Vertical Position Angle (VPA) of the current Boresight (here)
1721	vpa	rate	FLOAT8	degrees per second	%lf	NUMBER			d(vpa)/dt for the boresight
1722	vpa	stdev	FLOAT8		%lf	NUMBER			sigma(vpa) for the boresight
1723	rof								Rotation of Field (ROF) of the current Boresight (here)
1724	rof	rate	FLOAT8	degrees per second	%lf	NUMBER			d(rof)/dt for the boresight

	A	B	C	D	E	F	G	H	I
1725	rof	stdev	FLOAT8		%lf	NUMBER			sigma(rof) for the boresight
1726	camera								user-settable defaults for the ta_state.camera command
1727	camera	wfi							Defaults when the camera being set is WFI
1728	camera_wfi	integration	FLOAT8	seconds	%lf	NUMBER	0.01	10	Integration time for each camera image
1729	camera_wfi	binning	INT4	unity	%d	ENUM	1	4	Binning factor for camera CCD array(1: 1x1), (1: 1), (2: 2x2), (2: 2), (4: 4x4), (4: 4),
1730	camera_wfi	adcu	INT4	N/A	%d	ENUM	8	14	Number of bits in the output data(8: 8), (14: 14),
1731	camera	ffi							Defaults when the camera being set is FFI
1732	camera_ffi	integration	FLOAT8	seconds	%lf	NUMBER	0.01	10	Integration time for each camera image
1733	camera_ffi	binning	INT4	unity	%d	ENUM	1	4	Binning factor for camera CCD array(1: 1x1), (1: 1), (2: 2x2), (2: 2), (4: 4x4), (4: 4),
1734	camera_ffi	adcu	INT4	N/A	%d	ENUM	8	14	Number of bits in the output data(8: 8), (14: 14),
1735	camera	fpi							Defaults when the camera being set is FPI
1736	camera_fpi	integration	FLOAT8	seconds	%lf	NUMBER	0.01	10	Integration time for each camera image
1737	camera_fpi	binning	INT4	unity	%d	ENUM	1	4	Binning factor for camera CCD array(1: 1x1), (1: 1), (2: 2x2), (2: 2), (4: 4x4), (4: 4),
1738	camera_fpi	adcu	INT4	N/A	%d	ENUM	8	14	Number of bits in the output data(8: 8), (14: 14),
1739	servo								user-settable defaults for the ta_state.servo command
1740	servo	compensation	INT4		%d	ENUM			Default compensation for ta_state.servo command(1: FBC_OFF), (2: FBC_QS), (3: FBC_DY), (4: FBC_ON),
1741	iqc								Data published by the ta_state.iqc command
1742	iqc	set_point	FLOAT8	degrees	%lf	NUMBER	15	70	Elevation the last time IQC was used
1743	iqc	initialized	BOOL4		%s	ENUM	0	1	Has IQC been initialized?(0: false), (1: true),
1744	iqc	monitoring	UINT4		0x%X	BIT	0	7	Is elevation being checked for IQC?(0: user), (1: telescope), (2: sma),
1745	iqc	triggered	BOOL4		%s	ENUM	0	1	Is there an outstanding IQC alert?(0: false), (1: true),
1746	iqc	limit	SEXA8	degrees	%sgd	NUMBER	0	55	Margin between IQC set point and triggers
1747	oper_state		INT4	N/A	0x%2.2X	NUMBER			Operating state
1748	update_rate		FLOAT8	hertz	%f	NUMBER	1	500	periodic activity rate
1749	servo_mode		INT4		%d	NUMBER			Simplification of ta_tsc.tsc_status
1750	**ta_trc** **TA Tracker Controller (TRC) data**								
1751	**HK NAME**	**Name**	**Rep**	**Units**	**Format**	**Form**	**lo_lim**	**hi_lim**	**Description**
1752	rcs_id		STRING	N/A	%s	NUMBER			Version information for the XML file that defines this data source
1753	archive_info								Archive Info
1754	archive_info	archive_status	BOOL4	N/A	%s	ENUM	0	1	(0: false), (1: true),
1755	archive_info	current_bytes_archived	FLOAT8	N/A	%1f	NUMBER	0		Total bytes written to the current ark file
1756	archive_info	total_bytes_archived	FLOAT8	N/A	%1f	NUMBER	0		Total bytes written since this data source starts
1757	archive_info	archive_file_name	STRING	N/A	%s	NUMBER			Archive file name
1758	archive_nsamples								Archive nth sample for data groups, the part before the _nsample must match the data group node name
1759	archive_nsamples	current_bytes_archived_nsample	INT4	N/A	%d	NUMBER	0		
1760	archive_nsamples	total_bytes_archived_nsample	INT4	N/A	%d	NUMBER	0		

	A	B	C	D	E	F	G	H	I
1761	archive_nsamples	trc_process_info_nsample	INT4	N/A	%d	NUMBER	0		
1762	archive_nsamples	trc_watchdog_nsample	INT4	N/A	%d	NUMBER	0		
1763	archive_nsamples	trc_status_table_nsample	INT4	N/A	%d	NUMBER	0		
1764	archive_nsamples	trc_main_aoi_table_nsampl e	INT4	N/A	%d	NUMBER	0		
1765	archive_nsamples	trc_centroid_table_nsample	INT4	N/A	%d	NUMBER	0		
1766	archive_nsamples	trc_limb_table_nsample	INT4	N/A	%d	NUMBER	0		
1767	archive_nsamples	trc_distribution_table_nsam ple	INT4	N/A	%d	NUMBER	0		
1768	archive_nsamples	trc_boresight_table_nsampl e	INT4	N/A	%d	NUMBER	0		
1769	archive_nsamples	trc_tracking_table_nsample	INT4	N/A	%d	NUMBER	0		
1770	archive_nsamples	trc_rof_table_nsample	INT4	N/A	%d	NUMBER	0		
1771	archive_nsamples	trc_nodding_table_nsample	INT4	N/A	%d	NUMBER	0		
1772	archive_nsamples	trc_tascu_comm_table_nsa mple	INT4	N/A	%d	NUMBER	0		
1773	archive_nsamples	wfi_img_hist_table_nsample	INT4	N/A	%d	NUMBER	0		
1774	archive_nsamples	ffi_img_hist_table_nsample	INT4	N/A	%d	NUMBER	0		
1775	archive_nsamples	fpi_img_hist_table_nsample	INT4	N/A	%d	NUMBER	0		
1776	archive_nsamples	trc_temperature_table_nsa mple	INT4	N/A	%d	NUMBER	0		
1777	archive_nsamples	trc_alignment_table_nsampl e	INT4	N/A	%d	NUMBER	0		
1778	archive_nsamples	wfi_control_table_nsample	INT4	N/A	%d	NUMBER	0		
1779	archive_nsamples	wfi_aoi_bs_table_nsample	INT4	N/A	%d	NUMBER	0		
1780	archive_nsamples	ffi_control_table_nsample	INT4	N/A	%d	NUMBER	0		
1781	archive_nsamples	ffi_aoi_bs_table_nsample	INT4	N/A	%d	NUMBER	0		
1782	archive_nsamples	fpi_control_table_nsample	INT4	N/A	%d	NUMBER	0		
1783	archive_nsamples	fpi_aoi_bs_table_nsample	INT4	N/A	%d	NUMBER	0		
1784	commands		STRING	N/A	%s	NUMBER			Contains the last SCL command sent to the Tracker
1785	responses								Contains SCL responses for Tracker commands
1786	responses	trc_mode_positioning	STRING	N/A	%s	NUMBER			Last SCL response sent back to the issuer of the trc_mode_positioning command
1787	responses	trc_mode_tracking_centroid _on_axis	STRING	N/A	%s	NUMBER			Last SCL response sent back to the issuer of the trc_mode_tracking_centroid_on_axis command
1788	responses	trc_mode_tracking_centroid _offset	STRING	N/A	%s	NUMBER			Last SCL response sent back to the issuer of the trc_mode_tracking_centroid_offset command

	A	B	C	D	E	F	G	H	I
1789	responses	trc_mode_tracking_limb	STRING	N/A	%s	NUMBER			Last SCL response sent back to the issuer of the trc_mode_tracking_limb command
1790	responses	trc_rof_calculate	STRING	N/A	%s	NUMBER			Last SCL response sent back to the issuer of the trc_rof_calculate command
1791	responses	trc_mode_override	STRING	N/A	%s	NUMBER			Last SCL response sent back to the issuer of the trc_mode_override command
1792	responses	trc_aoi_define	STRING	N/A	%s	NUMBER			Last SCL response sent back to the issuer of the trc_aoi_define command
1793	responses	trc_aoi_clear	STRING	N/A	%s	NUMBER			Last SCL response sent back to the issuer of the trc_aoi_clear command
1794	responses	trc_aoi_correction	STRING	N/A	%s	NUMBER			Last SCL response sent back to the issuer of the trc_aoi_correction command
1795	responses	trc_boresight_define_pixel	STRING	N/A	%s	NUMBER			Last SCL response sent back to the issuer of the trc_boresight_define_pixel command
1796	responses	trc_boresight_define_tarf	STRING	N/A	%s	NUMBER			Last SCL response sent back to the issuer of the trc_boresight_define_tarf command
1797	responses	trc_boresight_clear	STRING	N/A	%s	NUMBER			Last SCL response sent back to the issuer of the trc_boresight_clear command
1798	responses	trc_los_limit_move	STRING	N/A	%s	NUMBER			Last SCL response sent back to the issuer of the trc_los_limit_move command
1799	responses	trc_los_limit_set	STRING	N/A	%s	NUMBER			Last SCL response sent back to the issuer of the trc_los_limit_set command
1800	responses	trc_mtbs_centroid	STRING	N/A	%s	NUMBER			Last SCL response sent back to the issuer of the trc_mtbs_centroid command
1801	responses	trc_mtbs_inertial	STRING	N/A	%s	NUMBER			Last SCL response sent back to the issuer of the trc_mtbs_inertial command
1802	responses	trc_nod_define	STRING	N/A	%s	NUMBER			Last SCL response sent back to the issuer of the trc_nod_define command
1803	responses	trc_nod_execute_ab	STRING	N/A	%s	NUMBER			Last SCL response sent back to the issuer of the trc_nod_execute_ab command
1804	responses	trc_nod_execute_ba	STRING	N/A	%s	NUMBER			Last SCL response sent back to the issuer of the trc_nod_execute_ba command
1805	responses	trc_tweak_position_move	STRING	N/A	%s	NUMBER			Last SCL response sent back to the issuer of the trc_tweak_position_move command
1806	responses	trc_tweak_position_set	STRING	N/A	%s	NUMBER			Last SCL response sent back to the issuer of the trc_tweak_position_set command
1807	responses	trc_fd_trc_offset	STRING	N/A	%s	NUMBER			Last SCL response sent back to the issuer of the trc_fd_trc_offset command
1808	responses	trc_atc_pos_corr	STRING	N/A	%s	NUMBER			Last SCL response sent back to the issuer of the trc_atc_pos_corr command
1809	responses	trc_atc_traj_est	STRING	N/A	%s	NUMBER			Last SCL response sent back to the issuer of the trc_atc_traj_est command
1810	responses	trc_fd_stop	STRING	N/A	%s	NUMBER			Last SCL response sent back to the issuer of the trc_fd_stop command
1811	responses	trc_focus_goto	STRING	N/A	%s	NUMBER			Last SCL response sent back to the issuer of the trc_focus_goto command
1812	responses	trc_focus_move	STRING	N/A	%s	NUMBER			Last SCL response sent back to the issuer of the trc_focus_move command
1813	responses	trc_focus_position	STRING	N/A	%s	NUMBER			Last SCL response sent back to the issuer of the trc_focus_position command

	A	B	C	D	E	F	G	H	I
1814	responses	trc_focus_auto	STRING	N/A	%s	NUMBER			Last SCL response sent back to the issuer of the trc_focus_auto command
1815	responses	trc_camera_speed	STRING	N/A	%s	NUMBER			Last SCL response sent back to the issuer of the trc_camera_speed command
1816	responses	trc_camera_integration	STRING	N/A	%s	NUMBER			Last SCL response sent back to the issuer of the trc_camera_integration command
1817	responses	trc_camera_test	STRING	N/A	%s	NUMBER			Last SCL response sent back to the issuer of the trc_camera_test command
1818	responses	trc_camera_sync	STRING	N/A	%s	NUMBER			Last SCL response sent back to the issuer of the trc_camera_sync command
1819	responses	trc_filter_home	STRING	N/A	%s	NUMBER			Last SCL response sent back to the issuer of the trc_filter_home command
1820	responses	trc_filter_select	STRING	N/A	%s	NUMBER			Last SCL response sent back to the issuer of the trc_filter_select command
1821	responses	trc_reticle_show	STRING	N/A	%s	NUMBER			Last SCL response sent back to the issuer of the trc_reticle_show command
1822	responses	trc_init	STRING	N/A	%s	NUMBER			Last SCL response sent back to the issuer of the trc_init command
1823	responses	trc_bit	STRING	N/A	%s	NUMBER			Last SCL response sent back to the issuer of the trc_bit command
1824	responses	trc_drift_limit	STRING	N/A	%s	NUMBER			Last SCL response sent back to the issuer of the trc_drift_limit command
1825	responses	trc_darkfield_acquisition	STRING	N/A	%s	NUMBER			Last SCL response sent back to the issuer of the trc_darkfield_acquisition command
1826	responses	trc_darkfield_store	STRING	N/A	%s	NUMBER			Last SCL response sent back to the issuer of the trc_darkfield_store command
1827	responses	trc_darkfield_load	STRING	N/A	%s	NUMBER			Last SCL response sent back to the issuer of the trc_darkfield_load command
1828	responses	trc_darkfield_get	STRING	N/A	%s	NUMBER			Last SCL response sent back to the issuer of the trc_darkfield_get command
1829	responses	trc_flatfield_get	STRING	N/A	%s	NUMBER			Last SCL response sent back to the issuer of the trc_flatfield_get command
1830	responses	trc_version_get	STRING	N/A	%s	NUMBER			Last SCL response sent back to the issuer of the trc_version_get command
1831	responses	trc_housekeeping_define	STRING	N/A	%s	NUMBER			Last SCL response sent back to the issuer of the trc_housekeeping_define command
1832	responses	trc_test_command	STRING	N/A	%s	NUMBER			Last SCL response sent back to the issuer of the trc_test_command command
1833	responses	trc_test_image	STRING	N/A	%s	NUMBER			Last SCL response sent back to the issuer of the trc_test_image command
1834	responses	send_packet	STRING	N/A	%s	NUMBER			Last SCL response sent back to the issuer of the send_packet command
1835	responses	trc_config_set	STRING	N/A	%s	NUMBER			Last SCL response sent back to the issuer of the trc_config_set command
1836	responses	trc_config_save	STRING	N/A	%s	NUMBER			Last SCL response sent back to the issuer of the trc_config_save command
1837	responses	trc_config_load	STRING	N/A	%s	NUMBER			Last SCL response sent back to the issuer of the trc_config_load command
1838	responses	trc_config_get	STRING	N/A	%s	NUMBER			Last SCL response sent back to the issuer of the trc_config_get command
1839	ta_trc_alert								Alerts produced by the TA Tracker
1840	ta_trc_alert	ta_trc_alert_info	STRING	N/A	%s	NUMBER			Information alert

	A	B	C	D	E	F	G	H	I
1841	ta_trc_alert	ta_trc_alert_warning	STRING	N/A	%s	NUMBER			Warning alert
1842	ta_trc_alert	ta_trc_alert_error	STRING	N/A	%s	NUMBER			Error alert
1843	ta_trc_alert	ta_trc_alert_fatal	STRING	N/A	%s	NUMBER			Fatal alert
1844	ta_trc_alarm								Alarms produced by the TA Tracker
1845	ta_trc_alarm	ta_trc_alarm_info	STRING	N/A	%s	NUMBER			Information alarm
1846	ta_trc_alarm	ta_trc_alarm_warning	STRING	N/A	%s	NUMBER			Warning alarm
1847	ta_trc_alarm	ta_trc_alarm_error	STRING	N/A	%s	NUMBER			Error alarm
1848	ta_trc_alarm	ta_trc_alarm_fatal	STRING	N/A	%s	NUMBER			Fatal alarm
1849	trc_command_ack								generic acknowledgement to a Tracker command
1850	trc_command_ack	packet	BINARY	N/A	%s	NUMBER			data packet as it was received from the TA
1851	trc_command_ack	pkt_timestamp	TIME8	seconds	%d.%09d	NUMBER	0	2147483647	time data packet was constructed by TA
1852	trc_command_ack	timestamp	TIME8	seconds	%d.%09d	NUMBER	0	2147483647	time at which the event happened or was captured
1853	trc_command_ack	cmd_status	UINT2	N/A	%u	ENUM	0	5	CMD_ACCEPTED), (2: CMD_EXECUTION_STARTED), (3: STATUS), (4: WARNING), (5: ALARM),
1854	trc_command_ack	process_id	UINT2	N/A	%u	ENUM	0	552	ID of process which sent the acknowledgement(0: TRC_MCMH_CINT), (1: TRC_MCMH_CRCS), (2: TRC_MCMH_HKCC), (3: TRC_MCMH_RESH), (4: TRC_CEXE_CTRL), (5: TRC_TAIF_CRCC), (6: TRC_TAIF_HKCC), (7: TRC_TAIF_ATTH), (8: TRC_HKH_HDLR), (9: TRC_CAM_HDLR), (10: TRC_TAP_CALC), (11: TRC_ROF_CALC), (12: TRC_CENT_HDLR), (13: TRC_LIMB_HDLR), (14: TRC_AOIBS_HDLR), (15: TRC_IMG_HDLR), (16: TRC_ALIGN_HDLR), (32: WFI_CENT_CALC), (33: WFI_DARK_CALC), (34: WFI_LIMB_CALC), (35: WFI_OUT_HDLR), (36: WFI_SEQ_HDLR), (37: WFI_VIDH_CTRL), (38: WFI_VIDH_EXP_START), (39: WFI_VIDH_TRF_END), (40: WFI_VIDH_OUT), (288: FFI_CENT_CALC), (289: FFI_DARK_CALC), (290: FFI_LIMB_CALC), (291: FFI_OUT_HDLR), (292: FFI_SEQ_HDLR), (293: FFI_VIDH_CTRL), (294: FFI_VIDH_EXP_START), (295: FFI_VIDH_TRF_END), (296: FFI_VIDH_OUT), (544: FPI_CENT_CALC), (545: FPI_DARK_CALC), (546: FPI_LIMB_CALC), (547: FPI_OUT_HDLR), (548: FPI_SEQ_HDLR), (549: FPI_VIDH_CTRL), (550: FPI_VIDH_EXP_START), (551: FPI_VIDH_TRF_END), (552: FPI_VIDH_OUT),
1855	trc_command_ack	cmd_id	UINT2	N/A	%u	NUMBER	0	65535	ID of the command being acknowledged

	A	B	C	D	E	F	G	H	I
1856	trc_command_ack	msg_value	UINT2	N/A	%u	ENUM	0	161	Value of status, warning, or alarm message(0: OK), (1: CMD_UNDEFINED), (2: VERSION_ERROR), (3: MODE_CONFLICT), (4: PARAM_COUNT_ERR), (5: PARAM_RANGE_ERR), (6: EXECUTION_BUSY), (7: INTERNAL_ERROR), (16: TSC_BUSY), (17: TSC_SEND_TIMEOUT), (18: TSC_ACK_TIMEOUT), (19: TSC_ANS_TIMEOUT), (20: TSC_COMM_FAIL), (21: TSC_WRONG_STATE), (22: TSC_IF_ERROR), (32: AOI_SAME), (33: AOI_REDEFINED), (34: AOI_USED_TRACK), (35: AOI_USED_ROF), (36: AOI_NOT_COMPL_ON_FOV), (37: AOI_CLEARED), (38: AOI_NO_CENTROID), (39: AOI_NO_LIMB), (40: NO_BS_DEFINED), (48: TRACK_BS_ERROR), (49: TRACK_AOI_ERROR), (50: ROF_AOI_ERROR), (51: ROF_WRONG_TTAB_SETTINGS), (64: LOS_LIMIT_BUSY), (65: TWEAK_BUSY), (66: MTBS_LOW_CENT_QUALITY), (80: FOCUS_POS_OUT_OF_RANGE), (81: AOI_NOT_DEFINED_FPI), (82: FILT_REF_POS_NOT_DEF), (96: NODA_ROF_NONSENSE), (97: NODA_TRACK_AOI_ERROR), (98: NODA_BS_ERROR), (99: NODA_TRACK_AOI_SAME), (100: NODA_UNDEFINED_TRC_CMD), (101: NODA_ROF_AOI_SAME), (102: NODA_ROF_AOI_ERROR), (103: NODB_ROF_NONSENSE), (104: NODB_TRACK_AOI_ERROR), (105: NODB_BS_ERROR), (106: NODB_TRACK_AOI_SAME), (107: NODB_UNDEFINED_TRC_CMD), (108: NODB_ROF_AOI_SAME), (109: NODB_ROF_AOI_ERROR), (112: CAMH_INIT_WFI_OK), (113: CAMH_INIT_FFI_OK), (114: CAMH_INIT_FPI_OK), (115: CAMH_INIT_WFI_FAIL), (116: CAMH_INIT_FFI_FAIL), (117: CAMH_INIT_FPI_FAIL), (118: CAMH_INIT_WFI_FILT_OK), (119: CAMH_INIT_FFI_FILT_OK), (120: CAMH_INIT_FPI_FILT_OK), (121: CAMH_INIT_WFI_FILT_FAIL), (122: CAMH_INIT_FFI_FILT_FAIL), (123: CAMH_INIT_FPI_FILT_FAIL), (124: CAMH_INIT_FPI_FOCUS_OK), (125: CAMH_INIT_FPI_FOCUS_FAIL), (128: CAMH_TIMEOUT), (129: CAMH_AUTO_FOCUS_STEP), (130: CAMH_CCP_TIMEOUT_ERROR), (131: CAMH_CCP_UNDEF_ERROR), (132: CAMH_CHANGE_TO_SEQ), (133: CAMH_CHANGE_TO_SIM), (134: CAMH_DF_ACQU_SET), (135: CAMH_DF_ACQU_STEP), (136: CAMH_DF_ACQU_FINISH), (137: CAMH_DF_ACQU_RESET), (138: CAMH_CAN_WRITE_ERROR), (139: CAMH_TIMING_FILE_ERROR), (140: CAMH_CAN_CRC_ERROR), (141: CAMH_CAN_TIMEOUT), (142: CAMH_CAN_XON_ERROR), (143: CAMH_CCTL_TIMEOUT), (144: CAMH_CCTL_CONFIRM_ERROR), (145: CAMH_CCTL_ECHO_ERROR), (146: CAMH_CCTL_UNKNOWN_ERROR), (160: CONFIG_NOT_SAVED), (161: CONFIG_NOT_AVAILABLE),
1857	trc_command_ans								generic answer to a Tracker command
1858	trc_command_ans	packet	BINARY	N/A	%s	NUMBER			data packet as it was received from the TA
1859	trc_command_ans	pkt_timestamp	TIME8	seconds	%d.%09d	NUMBER	0	2147483647	time data packet was constructed by TA
1860	trc_command_ans	timestamp	TIME8	seconds	%d.%09d	NUMBER	0	2147483647	time at which the event happened or was captured
1861	trc_command_ans	cmd_status	UINT2	N/A	%u	ENUM	0	1	Command answer message from the TRC(0: COMMAND_EXECUTED), (1: COMMAND_ABORTED),

	A	B	C	D	E	F	G	H	I
1862	trc_command_ans	process_id	UINT2	N/A	%u	ENUM	0	552	ID of process which sent the answer(0: TRC_MCMH_CINT), (1: TRC_MCMH_CRCS), (2: TRC_MCMH_HKCC), (3: TRC_MCMH_RESH), (4: TRC_CEXE_CTRL), (5: TRC_TAIF_CRCC), (6: TRC_TAIF_HKCC), (7: TRC_TAIF_ATTH), (8: TRC_HKH_HDLR), (9: TRC_CAM_HDLR), (10: TRC_TAP_CALC), (11: TRC_ROF_CALC), (12: TRC_CENT_HDLR), (13: TRC_LIMB_HDLR), (14: TRC_AOIBS_HDLR), (15: TRC_IMG_HDLR), (16: TRC_ALIGN_HDLR), (32: WFI_CENT_CALC), (33: WFI_DARK_CALC), (34: WFI_LIMB_CALC), (35: WFI_OUT_HDLR), (36: WFI_SEQ_HDLR), (37: WFI_VIDH_CTRL), (38: WFI_VIDH_EXP_START), (39: WFI_VIDH_TRF_END), (40: WFI_VIDH_OUT), (288: FFI_CENT_CALC), (289: FFI_DARK_CALC), (290: FFI_LIMB_CALC), (291: FFI_OUT_HDLR), (292: FFI_SEQ_HDLR), (293: FFI_VIDH_CTRL), (294: FFI_VIDH_EXP_START), (295: FFI_VIDH_TRF_END), (296: FFI_VIDH_OUT), (544: FPI_CENT_CALC), (545: FPI_DARK_CALC), (546: FPI_LIMB_CALC), (547: FPI_OUT_HDLR), (548: FPI_SEQ_HDLR), (549: FPI_VIDH_CTRL), (550: FPI_VIDH_EXP_START), (551: FPI_VIDH_TRF_END), (552: FPI_VIDH_OUT),
1863	trc_command_ans	cmd_id	UINT2	N/A	%u	NUMBER	0	65535	ID of the command being answered
1864	trc_command_ans	msg_value	UINT2	N/A	%u	ENUM	0	4028	Value of command executed or aborted message(0: OK), (1: CMD_UNDEFINED), (2: WRONG_VERSION), (3: MODE_CONFLICT), (4: PARAM_COUNT_ERR), (5: PARAM_RANGE_ERR), (6: EXECUTION_BUSY), (7: INTERNAL_ERROR), (8: CMD_TIMEOUT), (16: TSC_BUSY), (17: TSC_SEND_TIMEOUT), (18: TSC_ACK_TIMEOUT), (19: TSC_ANS_TIMEOUT), (20: TSC_COMM_FAIL), (21: TSC_WRONG_STATE), (22: TSC_IF_ERROR), (32: AOI_SAME), (33: AOI_REDEFINED), (34: AOI_USED_TRACK), (35: AOI_USED_ROF), (36: AOI_NOT_COMPL_ON_FOV), (37: AOI_CLEARED), (38: AOI_NO_CENTROID), (39: AOI_NO_LIMB), (40: NO_BS_DEFINED), (48: TRACK_BS_ERROR), (49: TRACK_AOI_ERROR), (50: ROF_AOI_ERROR), (51: ROF_WRONG_TTAB_SETTINGS), (64: LOS_LIMIT_BUSY), (65: TWEAK_BUSY), (66: MTBS_LOW_CENT_QUALITY), (80: FOCUS_POS_OUT_OF_RANGE), (81: AOI_NOT_DEFINED_FPI), (82: FILT_REF_POS_NOT_DEF), (96: NODA_ROF_NONSENSE), (97: NODA_TRACK_AOI_ERROR), (98: NODA_BS_ERROR), (99: NODA_TRACK_AOI_SAME), (100: NODA_UNDEFINED_TRC_CMD), (101: NODA_ROF_AOI_SAME), (102: NODA_ROF_AOI_ERROR), (103: NODB_ROF_NONSENSE), (104: NODB_TRACK_AOI_ERROR), (105: NODB_BS_ERROR), (106: NODB_TRACK_AOI_SAME), (107: NODB_UNDEFINED_TRC_CMD), (108: NODB_ROF_AOI_SAME), (109: NODB_ROF_AOI_ERROR), (112: CAMH_INIT_WFI_OK), (113: CAMH_INIT_FFI_OK), (114: CAMH_INIT_FPI_OK), (115: CAMH_INIT_WFI_FAIL), (116: CAMH_INIT_FFI_FAIL), (117: CAMH_INIT_FPI_FAIL), (118: CAMH_INIT_WFI_FILT_OK), (119: CAMH_INIT_FFI_FILT_OK), (120: CAMH_INIT_FPI_FILT_OK), (121: CAMH_INIT_WFI_FILT_FAIL), (122: CAMH_INIT_FFI_FILT_FAIL), (123: CAMH_INIT_FPI_FILT_FAIL), (124: CAMH_INIT_FPI_FOCUS_OK), (125: CAMH_INIT_FPI_FOCUS_FAIL), (128: CAMH_TIMEOUT), (129: CAMH_AUTO_FOCUS_STEP), (130: CAMH_CCP_TIMEOUT_ERROR), (131: CAMH_CCP_UNDEF_ERROR), (132: CAMH_CHANGE_TO_SEQ), (133: CAMH_CHANGE_TO_SIM), (134: CAMH_DF_ACQU_SET), (135: CAMH_DF_ACQU_STEP), (136: CAMH_DF_ACQU_FINISH), (137: CAMH_DF_ACQU_RESET), (138: CAMH_CAN_WRITE_ERROR), (139: CAMH_TIMING_FILE_ERROR), (140: CAMH_CAN_CRC_ERROR), (141: CAMH_CAN_TIMEOUT), (142: CAMH_CAN_XON_ERROR), (143: CAMH_CCTL_TIMEOUT), (144: CAMH_CCTL_CONFIRM_ERROR), (145: CAMH_CCTL_ECHO_ERROR), (146: CAMH_CCTL_UNKNOWN_ERROR), (147: FOCUS_STUCK), (148: NO_VALID_TIMING_FILE), (149: FILTER_ERROR), (160: CONFIG_NOT_SAVED), (161: CONFIG_NOT_AVAILABLE), (518: TRC_VERSION_2.6), (4020: COMMAND_EXECUTED), (4021: COMMAND_ABORTED_MODE_CONFLICT), (4022: COMMAND_ABORTED_UNDEFINED_COMMAND), (4023: COMMAND_ABORTED_WRONG_NUMBER_OF_PARAMETERS), (4024: COMMAND_ABORTED_PARAMETER_OUT_OF_RANGE), (4025: COMMAND_ABORTED_MOVE_CMD), (4026: COMMAND_ABORTED_EXECUTION_ERROR), (4027: COMMAND_ABORTED_INVALID_VERSION), (4028: COMMAND_ABORTED_INVALID_HEADER),

	A	B	C	D	E	F	G	H	I
1865	trc_process_info								provides tracker process information
1866	trc_process_info	packet	BINARY	N/A	%s	NUMBER			data packet as it was received from the TA
1867	trc_process_info	pkt_timestamp	TIME8	seconds	%d.%09d	NUMBER	0	2147483647	time data packet was constructed by TA
1868	trc_process_info	timestamp	TIME8	seconds	%d.%09d	NUMBER	0	2147483647	time at which the event happened or was captured
1869	trc_process_info	process_status	UINT2	N/A	%u	ENUM	0	3	Current status of the process(0: TRC_PS_ABORTED), (1: TRC_PS_STATUS), (2: TRC_PS_WARNING), (3: TRC_PS_ALARM),
1870	trc_process_info	process_id	UINT2	N/A	%u	ENUM	0	552	ID of the process(0: TRC_MCMH_CINT), (1: TRC_MCMH_CRCS), (2: TRC_MCMH_HKCC), (3: TRC_MCMH_RESH), (4: TRC_CEXE_CTRL), (5: TRC_TAIF_CRCC), (6: TRC_TAIF_HKCC), (7: TRC_TAIF_ATTH), (8: TRC_HKH_HDLR), (9: TRC_CAM_HDLR), (10: TRC_TAP_CALC), (11: TRC_ROF_CALC), (12: TRC_CENT_HDLR), (13: TRC_LIMB_HDLR), (14: TRC_AOIBS_HDLR), (15: TRC_IMG_HDLR), (16: TRC_ALIGN_HDLR), (32: WFI_CENT_CALC), (33: WFI_DARK_CALC), (34: WFI_LIMB_CALC), (35: WFI_OUT_HDLR), (36: WFI_SEQ_HDLR), (37: WFI_VIDH_CTRL), (38: WFI_VIDH_EXP_START), (39: WFI_VIDH_TRF_END), (40: WFI_VIDH_OUT), (288: FFI_CENT_CALC), (289: FFI_DARK_CALC), (290: FFI_LIMB_CALC), (291: FFI_OUT_HDLR), (292: FFI_SEQ_HDLR), (293: FFI_VIDH_CTRL), (294: FFI_VIDH_EXP_START), (295: FFI_VIDH_TRF_END), (296: FFI_VIDH_OUT), (544: FPI_CENT_CALC), (545: FPI_DARK_CALC), (546: FPI_LIMB_CALC), (547: FPI_OUT_HDLR), (548: FPI_SEQ_HDLR), (549: FPI_VIDH_CTRL), (550: FPI_VIDH_EXP_START), (551: FPI_VIDH_TRF_END), (552: FPI_VIDH_OUT),
1871	trc_process_info	process_info	UINT4	N/A	%u	ENUM	0	112	Current information about the process(0: NONE), (1: INTERNAL_ERR), (2: PKT_TYPE_ERR), (3: TSC_IF), (4: COMM_ERR), (5: COMM_READ_ERR), (6: COMM_SYNC_ERR), (7: FOURIER_LOAD_FAILED), (16: SCHEME_ERR), (17: TSC_CMD_ERR), (18: TSC_STATE), (19: NO_AOI), (20: NO_BS), (21: DRIFT_LIMIT), (22: ACQ_LIMIT), (23: INADEQUATE_EXP_COND), (24: IMGH_TRANS_END_TIMING), (25: AOI_BS_NO_IMG_DATA), (26: IMGH_VIDEO_OUT_TIMING), (27: IMGH_TSC_DATA_MISSED), (32: CFG_TAB_NOT_LOADED), (33: LOW_CENTROID_QUALITY), (34: LOW_LIMB_QUALITY), (35: TRC_INF_INVALID_LIMB_DEFINITION), (48: ROF_DRIFT_TOO_BIG), (49: ROF_AOI_DIFF_CAM), (50: ROF_AOI_CLEARED), (51: ROF_AOI_NOT_COMPL_IN_FOV), (52: ROF_INADEQUATE_EXP_COND), (53: ROF_TASCU_CMD_NOT_EXEC), (54: ROF_AOI_REDEFINED), (64: VTE_IMG_SKIP_TIMING), (65: VTE_IMG_SKIP_SIZE), (66: SEH_IMG_SKIP_DATA), (67: INVALID_MODE_CHANGE), (80: VOU_TEST_IMAGE_ERR), (81: VOU_IMG_SEND_ERROR), (96: CEC_BS_OFF_FOV), (97: LCC_AOI_NOT_IN_FOV), (98: LCC_FOCAL_LEN_UNDEF), (112: HK_TEMP_RANGE),
1872	trc_telemetry_response								data returned in response to test command
1873	trc_telemetry_response	packet	BINARY	N/A	%s	NUMBER			data packet as it was received from the TA
1874	trc_telemetry_response	pkt_timestamp	TIME8	seconds	%d.%09d	NUMBER	0	2147483647	time data packet was constructed by TA
1875	trc_telemetry_response	logical_l1	UINT1	N/A	%u	ENUM	0	1	a logical value to return(0: FALSE), (1: TRUE),

	A	B	C	D	E	F	G	H	I
1876	trc_telemetry_response	unsigned_one_byte_integer_u1	UINT1	N/A	%u	NUMBER	0	254	an unsigned one-byte int to return
1877	trc_telemetry_response	unsigned_two_byte_integer_u2	UINT2	N/A	%u	NUMBER	0	65535	an unsigned two-byte int to return
1878	trc_telemetry_response	unsigned_four_byte_integer_u4	UINT4	N/A	%ld	NUMBER	0	4294967295	an unsigned four-byte int to return
1879	trc_telemetry_response	signed_one_byte_integer_i1	BYTE	N/A	%d	NUMBER	-128	127	a signed one-byte int to return
1880	trc_telemetry_response	signed_two_byte_integer_i2	INT2	N/A	%d	NUMBER	-32768	32767	a signed two-byte int to return
1881	trc_telemetry_response	signed_four_byte_integer_i4	INT4	N/A	%ld	NUMBER	-2147483648	2147483647	a signed four-byte int to return
1882	trc_telemetry_response	single_prec_float_r4	FLOAT4	N/A	%.6lf	NUMBER	-3.40E+38	3.40E+38	a single-precision float to return
1883	trc_telemetry_response	double_prec_float_r8	FLOAT8	N/A	%.16lf	NUMBER	-1.79769E308	1.79769E308	a double-precision float to return
1884	trc_telemetry_response	eight_byte_time_stamp_t8	TIME8	seconds	%ld.%09ld	NUMBER	0	2147483647	a standard 8-byte timestamp to return
1885	trc_watchdog								status watchdog data block
1886	trc_watchdog	packet	BINARY	N/A	%s	NUMBER			data packet as it was received from the TA
1887	trc_watchdog	pkt_timestamp	TIME8	seconds	%d.%09d	NUMBER	0	2147483647	time data packet was constructed by TA
1888	trc_watchdog	timestamp	TIME8	seconds	%d.%09d	NUMBER	0	2147483647	time at which the event happened or was captured
1889	trc_watchdog	main_op_mode_id	UINT4	N/A	%u	ENUM	0	2	current tracker mode(0: POSITIONING), (1: TRACKING), (2: OVERRIDE),
1890	trc_watchdog	main_op_mode_time	TIME8	seconds	%d.%09d	NUMBER	0	2147483647	timestamp for last mode change
1891	trc_watchdog	main_exe_state_id	UINT4	N/A	%u	ENUM	0	1	status of command execution(0: READY), (1: BUSY),
1892	trc_watchdog	main_exe_state_cmd	UINT4	N/A	%u	NUMBER	0	4294967295	command currently being processed
1893	trc_watchdog	main_exe_state_process	UINT4	N/A	%u	ENUM	0	4294967295	tracker process involved with command execution(0: NONE), (1: CMD_EXECUTION), (2: CAMERA_HANDLER),
1894	trc_watchdog	main_power_on_state	INT4	N/A	%d	ENUM	-1	1	short status of power-on state(-1: UNDEFINED), (0: NOT_OK), (1: OK),
1895	trc_watchdog	main_power_on_time	TIME8	seconds	%d.%09d	NUMBER	0	2147483647	time of last power-on procedure
1896	trc_watchdog	main_wfi_cam_state	INT4	N/A	%d	ENUM	-1	1	short status of WFI camera(-1: UNDEFINED), (0: NOT_OK), (1: OK),
1897	trc_watchdog	main_wfi_cam_time	TIME8	seconds	%d.%09d	NUMBER	0	2147483647	time of last initialization of WFI
1898	trc_watchdog	main_ffi_cam_state	INT4	N/A	%d	ENUM	-1	1	short status of FFI camera(-1: UNDEFINED), (0: NOT_OK), (1: OK),
1899	trc_watchdog	main_ffi_cam_time	TIME8	seconds	%d.%09d	NUMBER	0	2147483647	time of last initialization of FFI
1900	trc_watchdog	main_fpi_cam_state	INT4	N/A	%d	ENUM	-1	1	short status of FPI camera(-1: UNDEFINED), (0: NOT_OK), (1: OK),
1901	trc_watchdog	main_fpi_cam_time	TIME8	seconds	%d.%09d	NUMBER	0	2147483647	time of last initialization of FPI
1902	trc_watchdog	main_wfi_filter_state	INT4	N/A	%d	ENUM	-1	1	short status of WFI filter mechanism(-1: UNDEFINED), (0: NOT_OK), (1: OK),
1903	trc_watchdog	main_wfi_filter_time	TIME8	seconds	%d.%09d	NUMBER	0	2147483647	time of last initialization of WFI filter mechanism

	A	B	C	D	E	F	G	H	I
1904	trc_watchdog	main_ffi_filter_state	INT4	N/A	%d	ENUM	-1	1	short status of FFI filter mechanism(-1: UNDEFINED), (0: NOT_OK), (1: OK),
1905	trc_watchdog	main_ffi_filter_time	TIME8	seconds	%d.%09d	NUMBER	0	2147483647	time of last initialization of FFI filter mechanism
1906	trc_watchdog	main_fpi_filter_state	INT4	N/A	%d	ENUM	-1	1	short status of FPI filter mechanism(-1: UNDEFINED), (0: NOT_OK), (1: OK),
1907	trc_watchdog	main_fpi_filter_time	TIME8	seconds	%d.%09d	NUMBER	0	2147483647	time of last initialization of FPI filter mechanism
1908	trc_watchdog	main_focus_init_state	INT4	N/A	%d	ENUM	-1	1	short status of FPI focus mechanism(-1: UNDEFINED), (0: NOT_OK), (1: OK),
1909	trc_watchdog	main_focus_init_time	TIME8	seconds	%d.%09d	NUMBER	0	2147483647	time of last initialization of FPI focus mechanism
1910	trc_watchdog	main_builtin_test_state	INT4	N/A	%d	ENUM	-1	1	short status of last BIT(-1: UNDEFINED), (0: NOT_OK), (1: OK),
1911	trc_watchdog	main_builtin_test_time	TIME8	seconds	%d.%09d	NUMBER	0	2147483647	time of last BIT
1912	trc_watchdog	main_connection_states	UINT4	N/A	%u	BIT	0	4294967295	connection states to other devices/subsystems(0: TRC_CONN_TSC_CR), (1: TRC_CONN_TSC_HK), (2: TRC_CONN_MCP_CR), (3: TRC_CONN_MCP_HK), (8: TRC_CONN_WFI), (9: TRC_CONN_FFI), (10: TRC_CONN_FPI), (12: TRC_CONN_WFI_CTL), (13: TRC_CONN_FFI_CTL), (14: TRC_CONN_FPI_CTL), (16: TRC_CONN_CAN_IMG), (17: TRC_CONN_CAN_MTE), (24: TRC_CONN_IRIGB),
1913	trc_status_table								status table data
1914	trc_status_table	packet	BINARY	N/A	%s	NUMBER			data packet as it was received from the TA
1915	trc_status_table	pkt_timestamp	TIME8	seconds	%d.%09d	NUMBER	0	2147483647	time data packet was constructed by TA
1916	trc_status_table	timestamp	TIME8	seconds	%d.%09d	NUMBER	0	2147483647	time at which the event happened or was captured
1917	trc_status_table	table_id	UINT4	N/A	%u	NUMBER	0	4294967295	ID of the current table
1918	trc_status_table	main_op_mode_id	UINT4	N/A	%u	ENUM	0	2	current tracker mode(0: POSITIONING), (1: TRACKING), (2: OVERRIDE),
1919	trc_status_table	main_op_mode_time	TIME8	seconds	%d.%09d	NUMBER	0	2147483647	timestamp for last mode change
1920	trc_status_table	main_exe_state_id	UINT4	N/A	%u	ENUM	0	1	status of command execution(0: READY), (1: BUSY),
1921	trc_status_table	main_exe_state_cmd	UINT4	N/A	%u	NUMBER	0	4294967295	command currently being processed
1922	trc_status_table	main_exe_state_process	UINT4	N/A	%u	ENUM	0	2	tracker process involved with command execution(0: NONE), (1: CMD_EXECUTION), (2: CAMERA_HANDLER),
1923	trc_status_table	main_power_on_state	INT4	N/A	%d	ENUM	-1	1	short status of power-on state(-1: UNDEFINED), (0: NOT_OK), (1: OK),
1924	trc_status_table	main_power_on_time	TIME8	seconds	%d.%09d	NUMBER	0	2147483647	time of last power-on procedure
1925	trc_status_table	main_wfi_cam_state	INT4	N/A	%d	ENUM	-1	1	short status of WFI camera(-1: UNDEFINED), (0: NOT_OK), (1: OK),
1926	trc_status_table	main_wfi_cam_time	TIME8	seconds	%d.%09d	NUMBER	0	2147483647	time of last initialization of WFI
1927	trc_status_table	main_ffi_cam_state	INT4	N/A	%d	ENUM	-1	1	short status of FFI camera(-1: UNDEFINED), (0: NOT_OK), (1: OK),
1928	trc_status_table	main_ffi_cam_time	TIME8	seconds	%d.%09d	NUMBER	0	2147483647	time of last initialization of FFI
1929	trc_status_table	main_fpi_cam_state	INT4	N/A	%d	ENUM	-1	1	short status of FPI camera(-1: UNDEFINED), (0: NOT_OK), (1: OK),

	A	B	C	D	E	F	G	H	I
1930	trc_status_table	main_fpi_cam_time	TIME8	seconds	%d.%09d	NUMBER	0	2147483647	time of last initialization of FPI
1931	trc_status_table	main_wfi_filter_state	INT4	N/A	%d	ENUM	-1	1	short status of WFI filter mechanism(-1: UNDEFINED), (0: NOT_OK), (1: OK),
1932	trc_status_table	main_wfi_filter_time	TIME8	seconds	%d.%09d	NUMBER	0	2147483647	time of last initialization of WFI filter mechanism
1933	trc_status_table	main_ffi_filter_state	INT4	N/A	%d	ENUM	-1	1	short status of FFI filter mechanism(-1: UNDEFINED), (0: NOT_OK), (1: OK),
1934	trc_status_table	main_ffi_filter_time	TIME8	seconds	%d.%09d	NUMBER	0	2147483647	time of last initialization of FFI filter mechanism
1935	trc_status_table	main_fpi_filter_state	INT4	N/A	%d	ENUM	-1	1	short status of FPI filter mechanism(-1: UNDEFINED), (0: NOT_OK), (1: OK),
1936	trc_status_table	main_fpi_filter_time	TIME8	seconds	%d.%09d	NUMBER	0	2147483647	time of last initialization of FPI filter mechanism
1937	trc_status_table	main_focus_init_state	INT4	N/A	%d	ENUM	-1	1	short status of FPI focus mechanism(-1: UNDEFINED), (0: NOT_OK), (1: OK),
1938	trc_status_table	main_focus_init_time	TIME8	seconds	%d.%09d	NUMBER	0	2147483647	time of last initialization of FPI focus mechanism
1939	trc_status_table	main_builtin_test_state	INT4	N/A	%d	ENUM	-1	1	short status of last BIT(-1: UNDEFINED), (0: NOT_OK), (1: OK),
1940	trc_status_table	main_builtin_test_time	TIME8	seconds	%d.%09d	NUMBER	0	2147483647	time of last BIT
1941	trc_status_table	main_connection_states	UINT4	N/A	%u	BIT	0	4294967295	connection states to other devices/subsystems(0: TRC_CONN_TSC_CR), (1: TRC_CONN_TSC_HK), (2: TRC_CONN_MCP_CR), (3: TRC_CONN_MCP_HK), (8: TRC_CONN_WFI), (9: TRC_CONN_FFI), (10: TRC_CONN_FPI), (12: TRC_CONN_WFI_CTL), (13: TRC_CONN_FFI_CTL), (14: TRC_CONN_FPI_CTL), (16: TRC_CONN_CAN_IMG), (17: TRC_CONN_CAN_MTE), (24: TRC_CONN_IRIGB),
1942	trc_status_table	tweak_tw_pos_delta_el	FLOAT4	arcseconds	%f	NUMBER	-10	10	tweak elevation change commanded
1943	trc_status_table	tweak_tw_pos_delta_xel	FLOAT4	arcseconds	%f	NUMBER	-10	10	tweak cross elevation change commanded
1944	trc_status_table	tweak_tw_pos_time	TIME8	seconds	%d.%09d	NUMBER	0	2147483647	time tweak commanded
1945	trc_status_table	tweak_exe_cond_cmd_state	UINT4	N/A	%u	ENUM	0	3	status of execution of tweak command(0: IDLE), (1: PENDING), (2: BUSY), (3: DONE),
1946	trc_status_table	tweak_exe_cond_time_1	TIME8	seconds	%d.%09d	NUMBER	0	2147483647	time tweak command execution began
1947	trc_status_table	tweak_exe_cond_time_2	TIME8	seconds	%d.%09d	NUMBER	0	2147483647	time tweak command execution ended
1948	trc_status_table	limit_los_limit_tarf_axis_u	FLOAT8	N/A	%f	NUMBER	-1	1	commanded TARF axis U position for los limit handling
1949	trc_status_table	limit_los_limit_tarf_axis_v	FLOAT8	N/A	%f	NUMBER	-1	1	commanded TARF axis V position for los limit handling
1950	trc_status_table	limit_los_limit_tarf_axis_w	FLOAT8	N/A	%f	NUMBER	-1	1	commanded TARF axis W position for los limit handling
1951	trc_status_table	limit_los_limit_delta_rof	FLOAT4	degrees	%f	NUMBER	-6	6	commanded change in ROF for los limit handling
1952	trc_status_table	limit_los_limit_time	TIME8	seconds	%d.%09d	NUMBER	0	2147483647	time of los limit command

	A	B	C	D	E	F	G	H	I
1953	trc_status_table	limit_exe_cond_cmd_state	UINT4	N/A	%u	ENUM	0	3	status of execution of LOS limit handling command(0: IDLE), (1: PENDING), (2: BUSY), (3: DONE),
1954	trc_status_table	limit_exe_cond_time_1	TIME8	seconds	%d.%09d	NUMBER	0	2147483647	time LOS limit handling command began
1955	trc_status_table	limit_exe_cond_time_2	TIME8	seconds	%d.%09d	NUMBER	0	2147483647	time LOS limit handling command ended
1956	trc_status_table	wfi_time_new_expo_time	INT4	milliseconds	%d	NUMBER	10	10000	current exposure time for WFI
1957	trc_status_table	wfi_time_new_time_1	TIME8	seconds	%d.%09d	NUMBER	0	2147483647	beginning time for current exposure change
1958	trc_status_table	wfi_time_new_time_2	TIME8	seconds	%d.%09d	NUMBER	0	2147483647	ending time for current exposure change
1959	trc_status_table	wfi_time_old_expo_time	INT4	milliseconds	%d	NUMBER	10	10000	previous exposure time for WFI
1960	trc_status_table	wfi_time_old_time_1	TIME8	seconds	%d.%09d	NUMBER	0	2147483647	beginning time for previous exposure change
1961	trc_status_table	wfi_time_old_time_2	TIME8	seconds	%d.%09d	NUMBER	0	2147483647	ending time for previous exposure change
1962	trc_status_table	wfi_pixel_group	INT4	N/A	%d	ENUM	-1	2	current pixel grouping for WFI(-1: UNDEFINED), (0: 1x1), (1: 2x2), (2: 4x4),
1963	trc_status_table	wfi_pixel_time_1	TIME8	seconds	%d.%09d	NUMBER	0	2147483647	beginning time for last change
1964	trc_status_table	wfi_pixel_time_2	TIME8	seconds	%d.%09d	NUMBER	0	2147483647	ending time for last change
1965	trc_status_table	wfi_speed_format	INT4	N/A	%d	ENUM	-1	1	current WFI camera speed(-1: UNDEFINED), (0: 8_BIT), (1: 14_BIT),
1966	trc_status_table	wfi_speed_time_1	TIME8	seconds	%d.%09d	NUMBER	0	2147483647	beginning time for last change
1967	trc_status_table	wfi_speed_time_2	TIME8	seconds	%d.%09d	NUMBER	0	2147483647	ending time for last change
1968	trc_status_table	wfi_filter_ref_pos	INT4	N/A	%d	ENUM	-1	1	status of WFI filter position(-1: UNDEFINED), (1: DEFINED),
1969	trc_status_table	wfi_filter_act_pos	INT4	N/A	%d	ENUM	-1	6	current WFI filter position(-1: UNDEFINED), (0: HOME), (1: CLOSED), (2: FILTER_1), (3: FILTER_2), (4: FILTER_3), (5: FILTER_4), (6: FILTER_5),
1970	trc_status_table	wfi_filter_time_1	TIME8	seconds	%d.%09d	NUMBER	0	2147483647	beginning time for last change
1971	trc_status_table	wfi_filter_time_2	TIME8	seconds	%d.%09d	NUMBER	0	2147483647	ending time for last change
1972	trc_status_table	wfi_focus_position	FLOAT4	millimeters	%f	NUMBER	-300	300	current WFI focus position
1973	trc_status_table	wfi_focus_time_1	TIME8	seconds	%d.%09d	NUMBER	0	2147483647	beginning time for last change
1974	trc_status_table	wfi_focus_time_2	TIME8	seconds	%d.%09d	NUMBER	0	2147483647	ending time for last change
1975	trc_status_table	wfi_focal_len	FLOAT4	millimeters	%f	NUMBER	100	100000	focal length of WFI camera
1976	trc_status_table	wfi_reticle_brightness	FLOAT4	N/A	%f	NUMBER	0	1	current WFI reticle brightness
1977	trc_status_table	wfi_reticle_time_1	TIME8	seconds	%d.%09d	NUMBER	0	2147483647	beginning time for last change
1978	trc_status_table	wfi_reticle_time_2	TIME8	seconds	%d.%09d	NUMBER	0	2147483647	ending time for last change

	A	B	C	D	E	F	G	H	I
1979	trc_status_table	wfi_camera_start_time_1	TIME8	seconds	%d.%09d	NUMBER	0	2147483647	beginning time for last WFI camera START
1980	trc_status_table	wfi_camera_start_time_2	TIME8	seconds	%d.%09d	NUMBER	0	2147483647	ending time for last WFI camera START
1981	trc_status_table	wfi_camera_hold_time_1	TIME8	seconds	%d.%09d	NUMBER	0	2147483647	beginning time for last WFI camera HOLD
1982	trc_status_table	wfi_camera_hold_time_2	TIME8	seconds	%d.%09d	NUMBER	0	2147483647	ending time for last WFI camera HOLD
1983	trc_status_table	wfi_dark_image_time_1	TIME8	seconds	%d.%09d	NUMBER	0	2147483647	beginning time for last WFI camera dark image acquisition
1984	trc_status_table	wfi_dark_image_time_2	TIME8	seconds	%d.%09d	NUMBER	0	2147483647	ending time for last WFI camera dark image acquisition
1985	trc_status_table	wfi_flatfield_get_time_1	TIME8	seconds	%d.%09d	NUMBER	0	2147483647	beginning time for last WFI camera flatfield transfer
1986	trc_status_table	wfi_flatfield_get_time_2	TIME8	seconds	%d.%09d	NUMBER	0	2147483647	ending time for last WFI camera flatfield transfer
1987	trc_status_table	wfi_darkfield_get_time_1	TIME8	seconds	%d.%09d	NUMBER	0	2147483647	beginning time for last WFI camera darkfield transfer
1988	trc_status_table	wfi_darkfield_get_time_2	TIME8	seconds	%d.%09d	NUMBER	0	2147483647	ending time for last WFI camera darkfield transfer
1989	trc_status_table	wfi_camera_test_time_1	TIME8	seconds	%d.%09d	NUMBER	0	2147483647	beginning time for last WFI camera test procedure
1990	trc_status_table	wfi_camera_test_time_2	TIME8	seconds	%d.%09d	NUMBER	0	2147483647	ending time for last WFI camera test procedure
1991	trc_status_table	ffi_time_new_expo_time	INT4	milliseconds	%d	NUMBER	10	10000	current exposure time for FFI
1992	trc_status_table	ffi_time_new_time_1	TIME8	seconds	%d.%09d	NUMBER	0	2147483647	beginning time for current exposure change
1993	trc_status_table	ffi_time_new_time_2	TIME8	seconds	%d.%09d	NUMBER	0	2147483647	ending time for current exposure change
1994	trc_status_table	ffi_time_old_expo_time	INT4	milliseconds	%d	NUMBER	10	10000	previous exposure time for FFI
1995	trc_status_table	ffi_time_old_time_1	TIME8	seconds	%d.%09d	NUMBER	0	2147483647	beginning time for previous exposure change
1996	trc_status_table	ffi_time_old_time_2	TIME8	seconds	%d.%09d	NUMBER	0	2147483647	ending time for previous exposure change
1997	trc_status_table	ffi_pixel_group	INT4	N/A	%d	ENUM	-1	2	current pixel grouping for FFI(-1: UNDEFINED), (0: 1x1), (1: 2x2), (2: 4x4),
1998	trc_status_table	ffi_pixel_time_1	TIME8	seconds	%d.%09d	NUMBER	0	2147483647	beginning time for last change
1999	trc_status_table	ffi_pixel_time_2	TIME8	seconds	%d.%09d	NUMBER	0	2147483647	ending time for last change
2000	trc_status_table	ffi_speed_format	INT4	N/A	%d	ENUM	-1	1	current FFI camera speed(-1: UNDEFINED), (0: 8_BIT), (1: 14_BIT),
2001	trc_status_table	ffi_speed_time_1	TIME8	seconds	%d.%09d	NUMBER	0	2147483647	beginning time for last change
2002	trc_status_table	ffi_speed_time_2	TIME8	seconds	%d.%09d	NUMBER	0	2147483647	ending time for last change
2003	trc_status_table	ffi_filter_ref_pos	INT4	N/A	%d	ENUM	-1	1	status of FFI filter position(-1: UNDEFINED), (1: DEFINED),

	A	B	C	D	E	F	G	H	I
2004	trc_status_table	ffi_filter_act_pos	INT4	N/A	%d	ENUM	-1	6	current FFI filter position(-1: UNDEFINED), (0: HOME), (1: CLOSED), (2: FILTER_1), (3: FILTER_2), (4: FILTER_3), (5: FILTER_4), (6: FILTER_5),
2005	trc_status_table	ffi_filter_time_1	TIME8	seconds	%d.%09d	NUMBER	0	2147483647	beginning time for last change
2006	trc_status_table	ffi_filter_time_2	TIME8	seconds	%d.%09d	NUMBER	0	2147483647	ending time for last change
2007	trc_status_table	ffi_focus_position	FLOAT4	millimeters	%f	NUMBER	-300	300	current FFI focus position
2008	trc_status_table	ffi_focus_time_1	TIME8	seconds	%d.%09d	NUMBER	0	2147483647	beginning time for last change
2009	trc_status_table	ffi_focus_time_2	TIME8	seconds	%d.%09d	NUMBER	0	2147483647	ending time for last change
2010	trc_status_table	ffi_focal_len	FLOAT4	millimeters	%f	NUMBER	100	100000	focal length of FFI camera
2011	trc_status_table	ffi_reticle_brightness	FLOAT4	N/A	%f	NUMBER	0	1	current FFI reticle brightness
2012	trc_status_table	ffi_reticle_time_1	TIME8	seconds	%d.%09d	NUMBER	0	2147483647	beginning time for last change
2013	trc_status_table	ffi_reticle_time_2	TIME8	seconds	%d.%09d	NUMBER	0	2147483647	ending time for last change
2014	trc_status_table	ffi_camera_start_time_1	TIME8	seconds	%d.%09d	NUMBER	0	2147483647	beginning time for last FFI camera START
2015	trc_status_table	ffi_camera_start_time_2	TIME8	seconds	%d.%09d	NUMBER	0	2147483647	ending time for last FFI camera START
2016	trc_status_table	ffi_camera_hold_time_1	TIME8	seconds	%d.%09d	NUMBER	0	2147483647	beginning time for last FFI camera HOLD
2017	trc_status_table	ffi_camera_hold_time_2	TIME8	seconds	%d.%09d	NUMBER	0	2147483647	ending time for last FFI camera HOLD
2018	trc_status_table	ffi_dark_image_time_1	TIME8	seconds	%d.%09d	NUMBER	0	2147483647	beginning time for last FFI camera dark image acquisition
2019	trc_status_table	ffi_dark_image_time_2	TIME8	seconds	%d.%09d	NUMBER	0	2147483647	ending time for last FFI camera dark image acquisition
2020	trc_status_table	ffi_flatfield_get_time_1	TIME8	seconds	%d.%09d	NUMBER	0	2147483647	beginning time for last FFI camera flatfield transfer
2021	trc_status_table	ffi_flatfield_get_time_2	TIME8	seconds	%d.%09d	NUMBER	0	2147483647	ending time for last FFI camera flatfield transfer
2022	trc_status_table	ffi_darkfield_get_time_1	TIME8	seconds	%d.%09d	NUMBER	0	2147483647	beginning time for last FFI camera darkfield transfer
2023	trc_status_table	ffi_darkfield_get_time_2	TIME8	seconds	%d.%09d	NUMBER	0	2147483647	ending time for last FFI camera darkfield transfer
2024	trc_status_table	ffi_camera_test_time_1	TIME8	seconds	%d.%09d	NUMBER	0	2147483647	beginning time for last FFI camera test procedure
2025	trc_status_table	ffi_camera_test_time_2	TIME8	seconds	%d.%09d	NUMBER	0	2147483647	ending time for last FFI camera test procedure
2026	trc_status_table	fpi_time_new_expo_time	INT4	milliseconds	%d	NUMBER	10	10000	current exposure time for FPI
2027	trc_status_table	fpi_time_new_time_1	TIME8	seconds	%d.%09d	NUMBER	0	2147483647	beginning time for current exposure change
2028	trc_status_table	fpi_time_new_time_2	TIME8	seconds	%d.%09d	NUMBER	0	2147483647	ending time for current exposure change

	A	B	C	D	E	F	G	H	I
2029	trc_status_table	fpi_time_old_expo_time	INT4	milliseconds	%d	NUMBER	10	10000	previous exposure time for FPI
2030	trc_status_table	fpi_time_old_time_1	TIME8	seconds	%d.%09d	NUMBER	0	2147483647	beginning time for previous exposure change
2031	trc_status_table	fpi_time_old_time_2	TIME8	seconds	%d.%09d	NUMBER	0	2147483647	ending time for previous exposure change
2032	trc_status_table	fpi_pixel_group	INT4	N/A	%d	ENUM	-1	2	current pixel grouping for FPI(-1: UNDEFINED), (0: 1x1), (1: 2x2), (2: 4x4),
2033	trc_status_table	fpi_pixel_time_1	TIME8	seconds	%d.%09d	NUMBER	0	2147483647	beginning time for last change
2034	trc_status_table	fpi_pixel_time_2	TIME8	seconds	%d.%09d	NUMBER	0	2147483647	ending time for last change
2035	trc_status_table	fpi_speed_format	INT4	N/A	%d	ENUM	-1	1	current FPI camera speed(-1: UNDEFINED), (0: 8_BIT), (1: 14_BIT),
2036	trc_status_table	fpi_speed_time_1	TIME8	seconds	%d.%09d	NUMBER	0	2147483647	beginning time for last change
2037	trc_status_table	fpi_speed_time_2	TIME8	seconds	%d.%09d	NUMBER	0	2147483647	ending time for last change
2038	trc_status_table	fpi_filter_ref_pos	INT4	N/A	%d	ENUM	-1	1	status of FPI filter position(-1: UNDEFINED), (1: DEFINED),
2039	trc_status_table	fpi_filter_act_pos	INT4	N/A	%d	ENUM	-1	6	current FPI filter position(-1: UNDEFINED), (0: HOME), (1: CLOSED), (2: FILTER_1), (3: FILTER_2), (4: FILTER_3), (5: FILTER_4), (6: FILTER_5),
2040	trc_status_table	fpi_filter_time_1	TIME8	seconds	%d.%09d	NUMBER	0	2147483647	beginning time for last change
2041	trc_status_table	fpi_filter_time_2	TIME8	seconds	%d.%09d	NUMBER	0	2147483647	ending time for last change
2042	trc_status_table	fpi_focus_position	FLOAT4	millimeters	%f	NUMBER	-300	300	current FPI focus position
2043	trc_status_table	fpi_focus_time_1	TIME8	seconds	%d.%09d	NUMBER	0	2147483647	beginning time for last change
2044	trc_status_table	fpi_focus_time_2	TIME8	seconds	%d.%09d	NUMBER	0	2147483647	ending time for last change
2045	trc_status_table	fpi_focal_len	FLOAT4	millimeters	%f	NUMBER	100	100000	focal length of FPI camera
2046	trc_status_table	fpi_reticle_brightness	FLOAT4	N/A	%f	NUMBER	0	1	current FPI reticle brightness
2047	trc_status_table	fpi_reticle_time_1	TIME8	seconds	%d.%09d	NUMBER	0	2147483647	beginning time for last change
2048	trc_status_table	fpi_reticle_time_2	TIME8	seconds	%d.%09d	NUMBER	0	2147483647	ending time for last change
2049	trc_status_table	fpi_camera_start_time_1	TIME8	seconds	%d.%09d	NUMBER	0	2147483647	beginning time for last FPI camera START
2050	trc_status_table	fpi_camera_start_time_2	TIME8	seconds	%d.%09d	NUMBER	0	2147483647	ending time for last FPI camera START
2051	trc_status_table	fpi_camera_hold_time_1	TIME8	seconds	%d.%09d	NUMBER	0	2147483647	beginning time for last FPI camera HOLD
2052	trc_status_table	fpi_camera_hold_time_2	TIME8	seconds	%d.%09d	NUMBER	0	2147483647	ending time for last FPI camera HOLD
2053	trc_status_table	fpi_dark_image_time_1	TIME8	seconds	%d.%09d	NUMBER	0	2147483647	beginning time for last FPI camera dark image acquisition
2054	trc_status_table	fpi_dark_image_time_2	TIME8	seconds	%d.%09d	NUMBER	0	2147483647	ending time for last FPI camera dark image acquisition

	A	B	C	D	E	F	G	H	I
2055	trc_status_table	fpi_flatfield_get_time_1	TIME8	seconds	%d.%09d	NUMBER	0	2147483647	beginning time for last FPI camera flatfield transfer
2056	trc_status_table	fpi_flatfield_get_time_2	TIME8	seconds	%d.%09d	NUMBER	0	2147483647	ending time for last FPI camera flatfield transfer
2057	trc_status_table	fpi_darkfield_get_time_1	TIME8	seconds	%d.%09d	NUMBER	0	2147483647	beginning time for last FPI camera darkfield transfer
2058	trc_status_table	fpi_darkfield_get_time_2	TIME8	seconds	%d.%09d	NUMBER	0	2147483647	ending time for last FPI camera darkfield transfer
2059	trc_status_table	fpi_camera_test_time_1	TIME8	seconds	%d.%09d	NUMBER	0	2147483647	beginning time for last FPI camera test procedure
2060	trc_status_table	fpi_camera_test_time_2	TIME8	seconds	%d.%09d	NUMBER	0	2147483647	ending time for last FPI camera test procedure
2061	trc_main_aoi_table								tracker AOI table data
2062	trc_main_aoi_table	packet	BINARY	N/A	%s	NUMBER			data packet as it was received from the TA
2063	trc_main_aoi_table	pkt_timestamp	TIME8	seconds	%d.%09d	NUMBER	0	2147483647	time data packet was constructed by TA
2064	trc_main_aoi_table	timestamp	TIME8	seconds	%d.%09d	NUMBER	0	2147483647	time at which the event happened or was captured
2065	trc_main_aoi_table	table_id	UINT4	N/A	%u	NUMBER	0	4294967295	ID of the current table
2066	trc_main_aoi_table	aoi_1_sn	UINT4	N/A	%u	NUMBER	0	999	serial number of AOI 1
2067	trc_main_aoi_table	aoi_1_state	UINT4	N/A	%u	ENUM	0	1	current definition status of AOI 1(0: CLEARED), (1: DEFINED),
2068	trc_main_aoi_table	aoi_1_ts_def_time	TIME8	seconds	%d.%09d	NUMBER	0	2147483647	timestamp for last define/clear of AOI 1
2069	trc_main_aoi_table	aoi_1_camera	INT4	N/A	%d	ENUM	0	2	specifies camera on which AOI 1 is defined(0: WFI), (1: FFI), (2: FPI),
2070	trc_main_aoi_table	aoi_1_image_snr	INT4	N/A	%d	NUMBER	10000	39999	serial number of the image referring to AOI 1 data
2071	trc_main_aoi_table	aoi_1_size_pixel_rows	UINT4	N/A	%u	NUMBER	0	150	size of AOI 1 in pixel row values, specified during AOI definition
2072	trc_main_aoi_table	aoi_1_size_pixel_cols	UINT4	N/A	%u	NUMBER	0	150	size of AOI 1 in pixel column values, specified during AOI definition
2073	trc_main_aoi_table	aoi_1_pos_pixel_status	UINT4	N/A	%u	ENUM	0	1	status of AOI 1 pixel coordinates(0: NOT_VALID), (1: VALID),
2074	trc_main_aoi_table	aoi_1_pos_pixel_row_start	UINT4	N/A	%u	NUMBER	0	1023	row position of AOI 1 in pixel coordinates, specified during AOI definition and updated for each new image
2075	trc_main_aoi_table	aoi_1_pos_pixel_col_start	UINT4	N/A	%u	NUMBER	0	1023	column position of AOI 1 in pixel coordinates, specified during AOI definition and updated for each new image
2076	trc_main_aoi_table	aoi_1_pos_pixel_size_rows	UINT4	N/A	%u	NUMBER	0	150	row size of AOI 1 in pixel coordinates, specified during AOI definition and updated for each new image
2077	trc_main_aoi_table	aoi_1_pos_pixel_size_cols	UINT4	N/A	%u	NUMBER	0	150	column size of AOI 1 in pixel coordinates, specified during AOI definition and updated for each new image
2078	trc_main_aoi_table	aoi_1_pos_pixel_aoi_1_fov	UINT4	N/A	%u	ENUM	0	2	indicates the position of the AOI relative to the image(0: ON_FOV), (1: PART_FOV), (2: OFF_FOV),
2079	trc_main_aoi_table	aoi_1_pos_crf_status	INT4	N/A	%d	ENUM	0	1	status of AOI 1 position in the camera reference frame(0: NOT_VALID), (1: VALID),
2080	trc_main_aoi_table	aoi_1_pos_crf_axis_u	FLOAT8	N/A	%f	NUMBER	-1	1	AOI 1 U axis position in the camera reference frame
2081	trc_main_aoi_table	aoi_1_pos_crf_axis_v	FLOAT8	N/A	%f	NUMBER	-1	1	AOI 1 V axis position in the camera reference frame
2082	trc_main_aoi_table	aoi_1_pos_crf_axis_w	FLOAT8	N/A	%f	NUMBER	-1	1	AOI 1 W axis position in the camera reference frame
2083	trc_main_aoi_table	aoi_1_pos_irf_status	INT4	N/A	%d	ENUM	0	1	status of AOI 1 position in the inertial reference frame(0: NOT_VALID), (1: VALID),
2084	trc_main_aoi_table	aoi_1_pos_irf_axis_u	FLOAT8	N/A	%f	NUMBER	-1	1	AOI 1 U axis position in the inertial reference frame

	A	B	C	D	E	F	G	H	I
2085	trc_main_aoi_table	aoi_1_pos_irf_axis_v	FLOAT8	N/A	%f	NUMBER	-1	1	AOI 1 V axis position in the inertial reference frame
2086	trc_main_aoi_table	aoi_1_pos_irf_axis_w	FLOAT8	N/A	%f	NUMBER	-1	1	AOI 1 W axis position in the inertial reference frame
2087	trc_main_aoi_table	aoi_1_pos_tarf_status	INT4	N/A	%d	ENUM	0	1	status of AOI 1 position in the TA reference frame(0: NOT_VALID), (1: VALID),
2088	trc_main_aoi_table	aoi_1_pos_tarf_axis_u	FLOAT8	N/A	%f	NUMBER	-1	1	AOI 1 U axis position in the TA reference frame
2089	trc_main_aoi_table	aoi_1_pos_tarf_axis_v	FLOAT8	N/A	%f	NUMBER	-1	1	AOI 1 V axis position in the TA reference frame
2090	trc_main_aoi_table	aoi_1_pos_tarf_axis_w	FLOAT8	N/A	%f	NUMBER	-1	1	AOI 1 W axis position in the TA reference frame
2091	trc_main_aoi_table	aoi_1_calc_par_type	UINT4	N/A	%u	ENUM	0	2	kind of calculation performed on AOI 1(0: OFF), (1: CENTROID), (2: LIMB),
2092	trc_main_aoi_table	aoi_1_calc_par_prio	UINT4	N/A	%u	ENUM	1	4	priority of calculation on AOI 1: 1(highest)=tracking, 2=ROF calculation, 3=centroid/limb calculation, 4(lowest)=no calculation(1: HIGHEST), (2: HIGH), (3: LOW), (4: LOWEST),
2093	trc_main_aoi_table	aoi_1_calc_par_threshold	FLOAT4	N/A	%f	NUMBER	0	1	current threshold value for centroid or limb calculation
2094	trc_main_aoi_table	aoi_1_calc_par_range	FLOAT4	pixels	%f	NUMBER	0	100	current range limit value for centroid calculation
2095	trc_main_aoi_table	aoi_1_correct_darkfield	UINT4	N/A	%u	ENUM	0	1	indicates whether darkfield correction is used during centroid/limb and AOI position calculation(0: OFF), (1: ON),
2096	trc_main_aoi_table	aoi_1_correct_flatfield	UINT4	N/A	%u	ENUM	0	1	indicates whether flatfield correction is used during centroid/limb and AOI position calculation(0: OFF), (1: ON),
2097	trc_main_aoi_table	aoi_1_correct_distortion	UINT4	N/A	%u	ENUM	0	1	indicates whether distortion correction is used during centroid/limb and AOI position calculation(0: OFF), (1: ON),
2098	trc_main_aoi_table	aoi_2_sn	UINT4	N/A	%u	NUMBER	0	999	serial number of AOI 2
2099	trc_main_aoi_table	aoi_2_state	UINT4	N/A	%u	ENUM	0	1	current definition status of AOI 2(0: CLEARED), (1: DEFINED),
2100	trc_main_aoi_table	aoi_2_ts_def_time	TIME8	seconds	%d.%09d	NUMBER	0	2147483647	timestamp for last define/clear of AOI 2
2101	trc_main_aoi_table	aoi_2_camera	INT4	N/A	%d	ENUM	0	2	specifies camera on which AOI 2 is defined(0: WFI), (1: FFI), (2: FPI),
2102	trc_main_aoi_table	aoi_2_image_snr	INT4	N/A	%d	NUMBER	10000	39999	serial number of the image referring to AOI 2 data
2103	trc_main_aoi_table	aoi_2_size_pixel_rows	UINT4	N/A	%u	NUMBER	0	150	size of AOI 2 in pixel row values, specified during AOI definition
2104	trc_main_aoi_table	aoi_2_size_pixel_cols	UINT4	N/A	%u	NUMBER	0	150	size of AOI 2 in pixel column values, specified during AOI definition
2105	trc_main_aoi_table	aoi_2_pos_pixel_status	UINT4	N/A	%u	ENUM	0	1	status of AOI 2 pixel coordinates(0: NOT_VALID), (1: VALID),
2106	trc_main_aoi_table	aoi_2_pos_pixel_row_start	UINT4	N/A	%u	NUMBER	0	1023	row position of AOI 2 in pixel coordinates, specified during AOI definition and updated for each new image
2107	trc_main_aoi_table	aoi_2_pos_pixel_col_start	UINT4	N/A	%u	NUMBER	0	1023	column position of AOI 2 in pixel coordinates, specified during AOI definition and updated for each new image
2108	trc_main_aoi_table	aoi_2_pos_pixel_size_rows	UINT4	N/A	%u	NUMBER	0	150	row size of AOI 2 in pixel coordinates, specified during AOI definition and updated for each new image
2109	trc_main_aoi_table	aoi_2_pos_pixel_size_cols	UINT4	N/A	%u	NUMBER	0	150	column size of AOI 2 in pixel coordinates, specified during AOI definition and updated for each new image
2110	trc_main_aoi_table	aoi_2_pos_pixel_aoi_2_fov	UINT4	N/A	%u	ENUM	0	2	indicates the position of the AOI relative to the image(0: ON_FOV), (1: PART_FOV), (2: OFF_FOV),
2111	trc_main_aoi_table	aoi_2_pos_crf_status	INT4	N/A	%d	ENUM	0	1	status of AOI 2 position in the camera reference frame(0: NOT_VALID), (1: VALID),
2112	trc_main_aoi_table	aoi_2_pos_crf_axis_u	FLOAT8	N/A	%f	NUMBER	-1	1	AOI 2 U axis position in the camera reference frame
2113	trc_main_aoi_table	aoi_2_pos_crf_axis_v	FLOAT8	N/A	%f	NUMBER	-1	1	AOI 2 V axis position in the camera reference frame
2114	trc_main_aoi_table	aoi_2_pos_crf_axis_w	FLOAT8	N/A	%f	NUMBER	-1	1	AOI 2 W axis position in the camera reference frame

	A	B	C	D	E	F	G	H	I
2115	trc_main_aoi_table	aoi_2_pos_irf_status	INT4	N/A	%d	ENUM	0	1	status of AOI 2 position in the inertial reference frame(0: NOT_VALID), (1: VALID),
2116	trc_main_aoi_table	aoi_2_pos_irf_axis_u	FLOAT8	N/A	%f	NUMBER	-1	1	AOI 2 U axis position in the inertial reference frame
2117	trc_main_aoi_table	aoi_2_pos_irf_axis_v	FLOAT8	N/A	%f	NUMBER	-1	1	AOI 2 V axis position in the inertial reference frame
2118	trc_main_aoi_table	aoi_2_pos_irf_axis_w	FLOAT8	N/A	%f	NUMBER	-1	1	AOI 2 W axis position in the inertial reference frame
2119	trc_main_aoi_table	aoi_2_pos_tarf_status	INT4	N/A	%d	ENUM	0	1	status of AOI 2 position in the TA reference frame(0: NOT_VALID), (1: VALID),
2120	trc_main_aoi_table	aoi_2_pos_tarf_axis_u	FLOAT8	N/A	%f	NUMBER	-1	1	AOI 2 U axis position in the TA reference frame
2121	trc_main_aoi_table	aoi_2_pos_tarf_axis_v	FLOAT8	N/A	%f	NUMBER	-1	1	AOI 2 V axis position in the TA reference frame
2122	trc_main_aoi_table	aoi_2_pos_tarf_axis_w	FLOAT8	N/A	%f	NUMBER	-1	1	AOI 2 W axis position in the TA reference frame
2123	trc_main_aoi_table	aoi_2_calc_par_type	UINT4	N/A	%u	ENUM	0	2	kind of calculation performed on AOI 2(0: OFF), (1: CENTROID), (2: LIMB),
2124	trc_main_aoi_table	aoi_2_calc_par_prio	UINT4	N/A	%u	ENUM	1	4	priority of calculation on AOI 2: 1(highest)=tracking, 2=ROF calculation, 3=centroid/limb calculation, 4(lowest)=no calculation(1: HIGHEST), (2: HIGH), (3: LOW), (4: LOWEST),
2125	trc_main_aoi_table	aoi_2_calc_par_threshold	FLOAT4	N/A	%f	NUMBER	0	1	current threshold value for centroid or limb calculation
2126	trc_main_aoi_table	aoi_2_calc_par_range	FLOAT4	pixels	%f	NUMBER	0	100	current range limit value for centroid calculation
2127	trc_main_aoi_table	aoi_2_correct_darkfield	UINT4	N/A	%u	ENUM	0	1	indicates whether darkfield correction is used during centroid/limb and AOI position calculation(0: OFF), (1: ON),
2128	trc_main_aoi_table	aoi_2_correct_flatfield	UINT4	N/A	%u	ENUM	0	1	indicates whether flatfield correction is used during centroid/limb and AOI position calculation(0: OFF), (1: ON),
2129	trc_main_aoi_table	aoi_2_correct_distortion	UINT4	N/A	%u	ENUM	0	1	indicates whether distortion correction is used during centroid/limb and AOI position calculation(0: OFF), (1: ON),
2130	trc_main_aoi_table	aoi_3_sn	UINT4	N/A	%u	NUMBER	0	999	serial number of AOI 3
2131	trc_main_aoi_table	aoi_3_state	UINT4	N/A	%u	ENUM	0	1	current definition status of AOI 3(0: CLEARED), (1: DEFINED),
2132	trc_main_aoi_table	aoi_3_ts_def_time	TIME8	seconds	%d.%09d	NUMBER	0	2147483647	timestamp for last define/clear of AOI 3
2133	trc_main_aoi_table	aoi_3_camera	INT4	N/A	%d	ENUM	0	2	specifies camera on which AOI 3 is defined(0: WFI), (1: FFI), (2: FPI),
2134	trc_main_aoi_table	aoi_3_image_snr	INT4	N/A	%d	NUMBER	10000	39999	serial number of the image referring to AOI 3 data
2135	trc_main_aoi_table	aoi_3_size_pixel_rows	UINT4	N/A	%u	NUMBER	0	150	size of AOI 3 in pixel row values, specified during AOI definition
2136	trc_main_aoi_table	aoi_3_size_pixel_cols	UINT4	N/A	%u	NUMBER	0	150	size of AOI 3 in pixel column values, specified during AOI definition
2137	trc_main_aoi_table	aoi_3_pos_pixel_status	UINT4	N/A	%u	ENUM	0	1	status of AOI 3 pixel coordinates(0: NOT_VALID), (1: VALID),
2138	trc_main_aoi_table	aoi_3_pos_pixel_row_start	UINT4	N/A	%u	NUMBER	0	1023	row position of AOI 3 in pixel coordinates, specified during AOI definition and updated for each new image
2139	trc_main_aoi_table	aoi_3_pos_pixel_col_start	UINT4	N/A	%u	NUMBER	0	1023	column position of AOI 3 in pixel coordinates, specified during AOI definition and updated for each new image
2140	trc_main_aoi_table	aoi_3_pos_pixel_size_rows	UINT4	N/A	%u	NUMBER	0	150	row size of AOI 3 in pixel coordinates, specified during AOI definition and updated for each new image
2141	trc_main_aoi_table	aoi_3_pos_pixel_size_cols	UINT4	N/A	%u	NUMBER	0	150	column size of AOI 3 in pixel coordinates, specified during AOI definition and updated for each new image
2142	trc_main_aoi_table	aoi_3_pos_pixel_aoi_3_fov	UINT4	N/A	%u	ENUM	0	2	indicates the position of the AOI relative to the image(0: ON_FOV), (1: PART_FOV), (2: OFF_FOV),
2143	trc_main_aoi_table	aoi_3_pos_crf_status	INT4	N/A	%d	ENUM	0	1	status of AOI 3 position in the camera reference frame(0: NOT_VALID), (1: VALID),
2144	trc_main_aoi_table	aoi_3_pos_crf_axis_u	FLOAT8	N/A	%f	NUMBER	-1	1	AOI 3 U axis position in the camera reference frame

	A	B	C	D	E	F	G	H	I
2145	trc_main_aoi_table	aoi_3_pos_crf_axis_v	FLOAT8	N/A	%f	NUMBER	-1	1	AOI 3 V axis position in the camera reference frame
2146	trc_main_aoi_table	aoi_3_pos_crf_axis_w	FLOAT8	N/A	%f	NUMBER	-1	1	AOI 3 W axis position in the camera reference frame
2147	trc_main_aoi_table	aoi_3_pos_irf_status	INT4	N/A	%d	ENUM	0	1	status of AOI 3 position in the inertial reference frame(0: NOT_VALID), (1: VALID),
2148	trc_main_aoi_table	aoi_3_pos_irf_axis_u	FLOAT8	N/A	%f	NUMBER	-1	1	AOI 3 U axis position in the inertial reference frame
2149	trc_main_aoi_table	aoi_3_pos_irf_axis_v	FLOAT8	N/A	%f	NUMBER	-1	1	AOI 3 V axis position in the inertial reference frame
2150	trc_main_aoi_table	aoi_3_pos_irf_axis_w	FLOAT8	N/A	%f	NUMBER	-1	1	AOI 3 W axis position in the inertial reference frame
2151	trc_main_aoi_table	aoi_3_pos_tarf_status	INT4	N/A	%d	ENUM	0	1	status of AOI 3 position in the TA reference frame(0: NOT_VALID), (1: VALID),
2152	trc_main_aoi_table	aoi_3_pos_tarf_axis_u	FLOAT8	N/A	%f	NUMBER	-1	1	AOI 3 U axis position in the TA reference frame
2153	trc_main_aoi_table	aoi_3_pos_tarf_axis_v	FLOAT8	N/A	%f	NUMBER	-1	1	AOI 3 V axis position in the TA reference frame
2154	trc_main_aoi_table	aoi_3_pos_tarf_axis_w	FLOAT8	N/A	%f	NUMBER	-1	1	AOI 3 W axis position in the TA reference frame
2155	trc_main_aoi_table	aoi_3_calc_par_type	UINT4	N/A	%u	ENUM	0	2	kind of calculation performed on AOI 3(0: OFF), (1: CENTROID), (2: LIMB),
2156	trc_main_aoi_table	aoi_3_calc_par_prio	UINT4	N/A	%u	ENUM	1	4	priority of calculation on AOI 3: 1(highest)=tracking, 2=ROF calculation, 3=centroid/limb calculation, 4(lowest)=no calculation(1: HIGHEST), (2: HIGH), (3: LOW), (4: LOWEST),
2157	trc_main_aoi_table	aoi_3_calc_par_threshold	FLOAT4	N/A	%f	NUMBER	0	1	current threshold value for centroid or limb calculation
2158	trc_main_aoi_table	aoi_3_calc_par_range	FLOAT4	pixels	%f	NUMBER	0	100	current range limit value for centroid calculation
2159	trc_main_aoi_table	aoi_3_correct_darkfield	UINT4	N/A	%u	ENUM	0	1	indicates whether darkfield correction is used during centroid/limb and AOI position calculation(0: OFF), (1: ON),
2160	trc_main_aoi_table	aoi_3_correct_flatfield	UINT4	N/A	%u	ENUM	0	1	indicates whether flatfield correction is used during centroid/limb and AOI position calculation(0: OFF), (1: ON),
2161	trc_main_aoi_table	aoi_3_correct_distortion	UINT4	N/A	%u	ENUM	0	1	indicates whether distortion correction is used during centroid/limb and AOI position calculation(0: OFF), (1: ON),
2162	trc_main_aoi_table	aoi_4_sn	UINT4	N/A	%u	NUMBER	0	999	serial number of AOI 4
2163	trc_main_aoi_table	aoi_4_state	UINT4	N/A	%u	ENUM	0	1	current definition status of AOI 4(0: CLEARED), (1: DEFINED),
2164	trc_main_aoi_table	aoi_4_ts_def_time	TIME8	seconds	%d.%09d	NUMBER	0	2147483647	timestamp for last define/clear of AOI 4
2165	trc_main_aoi_table	aoi_4_camera	INT4	N/A	%d	ENUM	0	2	specifies camera on which AOI 4 is defined(0: WFI), (1: FFI), (2: FPI),
2166	trc_main_aoi_table	aoi_4_image_snr	INT4	N/A	%d	NUMBER	10000	39999	serial number of the image referring to AOI 4 data
2167	trc_main_aoi_table	aoi_4_size_pixel_rows	UINT4	N/A	%u	NUMBER	0	150	size of AOI 4 in pixel row values, specified during AOI definition
2168	trc_main_aoi_table	aoi_4_size_pixel_cols	UINT4	N/A	%u	NUMBER	0	150	size of AOI 4 in pixel column values, specified during AOI definition
2169	trc_main_aoi_table	aoi_4_pos_pixel_status	UINT4	N/A	%u	ENUM	0	1	status of AOI 4 pixel coordinates(0: NOT_VALID), (1: VALID),
2170	trc_main_aoi_table	aoi_4_pos_pixel_row_start	UINT4	N/A	%u	NUMBER	0	1023	row position of AOI 4 in pixel coordinates, specified during AOI definition and updated for each new image
2171	trc_main_aoi_table	aoi_4_pos_pixel_col_start	UINT4	N/A	%u	NUMBER	0	1023	column position of AOI 4 in pixel coordinates, specified during AOI definition and updated for each new image
2172	trc_main_aoi_table	aoi_4_pos_pixel_size_rows	UINT4	N/A	%u	NUMBER	0	150	row size of AOI 4 in pixel coordinates, specified during AOI definition and updated for each new image
2173	trc_main_aoi_table	aoi_4_pos_pixel_size_cols	UINT4	N/A	%u	NUMBER	0	150	column size of AOI 4 in pixel coordinates, specified during AOI definition and updated for each new image
2174	trc_main_aoi_table	aoi_4_pos_pixel_aoi_4_fov	UINT4	N/A	%u	ENUM	0	2	indicates the position of the AOI relative to the image(0: ON_FOV), (1: PART_FOV), (2: OFF_FOV),

	A	B	C	D	E	F	G	H	I
2175	trc_main_aoi_table	aoi_4_pos_crf_status	INT4	N/A	%d	ENUM	0	1	status of AOI 4 position in the camera reference frame(0: NOT_VALID), (1: VALID),
2176	trc_main_aoi_table	aoi_4_pos_crf_axis_u	FLOAT8	N/A	%f	NUMBER	-1	1	AOI 4 U axis position in the camera reference frame
2177	trc_main_aoi_table	aoi_4_pos_crf_axis_v	FLOAT8	N/A	%f	NUMBER	-1	1	AOI 4 V axis position in the camera reference frame
2178	trc_main_aoi_table	aoi_4_pos_crf_axis_w	FLOAT8	N/A	%f	NUMBER	-1	1	AOI 4 W axis position in the camera reference frame
2179	trc_main_aoi_table	aoi_4_pos_irf_status	INT4	N/A	%d	ENUM	0	1	status of AOI 4 position in the inertial reference frame(0: NOT_VALID), (1: VALID),
2180	trc_main_aoi_table	aoi_4_pos_irf_axis_u	FLOAT8	N/A	%f	NUMBER	-1	1	AOI 4 U axis position in the inertial reference frame
2181	trc_main_aoi_table	aoi_4_pos_irf_axis_v	FLOAT8	N/A	%f	NUMBER	-1	1	AOI 4 V axis position in the inertial reference frame
2182	trc_main_aoi_table	aoi_4_pos_irf_axis_w	FLOAT8	N/A	%f	NUMBER	-1	1	AOI 4 W axis position in the inertial reference frame
2183	trc_main_aoi_table	aoi_4_pos_tarf_status	INT4	N/A	%d	ENUM	0	1	status of AOI 4 position in the TA reference frame(0: NOT_VALID), (1: VALID),
2184	trc_main_aoi_table	aoi_4_pos_tarf_axis_u	FLOAT8	N/A	%f	NUMBER	-1	1	AOI 4 U axis position in the TA reference frame
2185	trc_main_aoi_table	aoi_4_pos_tarf_axis_v	FLOAT8	N/A	%f	NUMBER	-1	1	AOI 4 V axis position in the TA reference frame
2186	trc_main_aoi_table	aoi_4_pos_tarf_axis_w	FLOAT8	N/A	%f	NUMBER	-1	1	AOI 4 W axis position in the TA reference frame
2187	trc_main_aoi_table	aoi_4_calc_par_type	UINT4	N/A	%u	ENUM	0	2	kind of calculation performed on AOI 4(0: OFF), (1: CENTROID), (2: LIMB),
2188	trc_main_aoi_table	aoi_4_calc_par_prio	UINT4	N/A	%u	ENUM	1	4	priority of calculation on AOI 4: 1(highest)=tracking, 2=ROF calculation, 3=centroid/limb calculation, 4(lowest)=no calculation(1: HIGHEST), (2: HIGH), (3: LOW), (4: LOWEST),
2189	trc_main_aoi_table	aoi_4_calc_par_threshold	FLOAT4	N/A	%f	NUMBER	0	1	current threshold value for centroid or limb calculation
2190	trc_main_aoi_table	aoi_4_calc_par_range	FLOAT4	pixels	%f	NUMBER	0	100	current range limit value for centroid calculation
2191	trc_main_aoi_table	aoi_4_correct_darkfield	UINT4	N/A	%u	ENUM	0	1	indicates whether darkfield correction is used during centroid/limb and AOI position calculation(0: OFF), (1: ON),
2192	trc_main_aoi_table	aoi_4_correct_flatfield	UINT4	N/A	%u	ENUM	0	1	indicates whether flatfield correction is used during centroid/limb and AOI position calculation(0: OFF), (1: ON),
2193	trc_main_aoi_table	aoi_4_correct_distortion	UINT4	N/A	%u	ENUM	0	1	indicates whether distortion correction is used during centroid/limb and AOI position calculation(0: OFF), (1: ON),
2194	trc_main_aoi_table	aoi_5_sn	UINT4	N/A	%u	NUMBER	0	999	serial number of AOI 5
2195	trc_main_aoi_table	aoi_5_state	UINT4	N/A	%u	ENUM	0	1	current definition status of AOI 5(0: CLEARED), (1: DEFINED),
2196	trc_main_aoi_table	aoi_5_ts_def_time	TIME8	seconds	%d.%09d	NUMBER	0	2147483647	timestamp for last define/clear of AOI 5
2197	trc_main_aoi_table	aoi_5_camera	INT4	N/A	%d	ENUM	0	2	specifies camera on which AOI 5 is defined(0: WFI), (1: FFI), (2: FPI),
2198	trc_main_aoi_table	aoi_5_image_snr	INT4	N/A	%d	NUMBER	10000	39999	serial number of the image referring to AOI 5 data
2199	trc_main_aoi_table	aoi_5_size_pixel_rows	UINT4	N/A	%u	NUMBER	0	150	size of AOI 5 in pixel row values, specified during AOI definition
2200	trc_main_aoi_table	aoi_5_size_pixel_cols	UINT4	N/A	%u	NUMBER	0	150	size of AOI 5 in pixel column values, specified during AOI definition
2201	trc_main_aoi_table	aoi_5_pos_pixel_status	UINT4	N/A	%u	ENUM	0	1	status of AOI 5 pixel coordinates(0: NOT_VALID), (1: VALID),
2202	trc_main_aoi_table	aoi_5_pos_pixel_row_start	UINT4	N/A	%u	NUMBER	0	1023	row position of AOI 5 in pixel coordinates, specified during AOI definition and updated for each new image
2203	trc_main_aoi_table	aoi_5_pos_pixel_col_start	UINT4	N/A	%u	NUMBER	0	1023	column position of AOI 5 in pixel coordinates, specified during AOI definition and updated for each new image
2204	trc_main_aoi_table	aoi_5_pos_pixel_size_rows	UINT4	N/A	%u	NUMBER	0	150	row size of AOI 5 in pixel coordinates, specified during AOI definition and updated for each new image
2205	trc_main_aoi_table	aoi_5_pos_pixel_size_cols	UINT4	N/A	%u	NUMBER	0	150	column size of AOI 5 in pixel coordinates, specified during AOI definition and updated for each new image

	A	B	C	D	E	F	G	H	I
2206	trc_main_aoi_table	aoi_5_pos_pixel_aoi_5_fov	UINT4	N/A	%u	ENUM	0	2	indicates the position of the AOI relative to the image(0: ON_FOV), (1: PART_FOV), (2: OFF_FOV),
2207	trc_main_aoi_table	aoi_5_pos_crf_status	INT4	N/A	%d	ENUM	0	1	status of AOI 5 position in the camera reference frame(0: NOT_VALID), (1: VALID),
2208	trc_main_aoi_table	aoi_5_pos_crf_axis_u	FLOAT8	N/A	%f	NUMBER	-1	1	AOI 5 U axis position in the camera reference frame
2209	trc_main_aoi_table	aoi_5_pos_crf_axis_v	FLOAT8	N/A	%f	NUMBER	-1	1	AOI 5 V axis position in the camera reference frame
2210	trc_main_aoi_table	aoi_5_pos_crf_axis_w	FLOAT8	N/A	%f	NUMBER	-1	1	AOI 5 W axis position in the camera reference frame
2211	trc_main_aoi_table	aoi_5_pos_irf_status	INT4	N/A	%d	ENUM	0	1	status of AOI 5 position in the inertial reference frame(0: NOT_VALID), (1: VALID),
2212	trc_main_aoi_table	aoi_5_pos_irf_axis_u	FLOAT8	N/A	%f	NUMBER	-1	1	AOI 5 U axis position in the inertial reference frame
2213	trc_main_aoi_table	aoi_5_pos_irf_axis_v	FLOAT8	N/A	%f	NUMBER	-1	1	AOI 5 V axis position in the inertial reference frame
2214	trc_main_aoi_table	aoi_5_pos_irf_axis_w	FLOAT8	N/A	%f	NUMBER	-1	1	AOI 5 W axis position in the inertial reference frame
2215	trc_main_aoi_table	aoi_5_pos_tarf_status	INT4	N/A	%d	ENUM	0	1	status of AOI 5 position in the TA reference frame(0: NOT_VALID), (1: VALID),
2216	trc_main_aoi_table	aoi_5_pos_tarf_axis_u	FLOAT8	N/A	%f	NUMBER	-1	1	AOI 5 U axis position in the TA reference frame
2217	trc_main_aoi_table	aoi_5_pos_tarf_axis_v	FLOAT8	N/A	%f	NUMBER	-1	1	AOI 5 V axis position in the TA reference frame
2218	trc_main_aoi_table	aoi_5_pos_tarf_axis_w	FLOAT8	N/A	%f	NUMBER	-1	1	AOI 5 W axis position in the TA reference frame
2219	trc_main_aoi_table	aoi_5_calc_par_type	UINT4	N/A	%u	ENUM	0	2	kind of calculation performed on AOI 5(0: OFF), (1: CENTROID), (2: LIMB),
2220	trc_main_aoi_table	aoi_5_calc_par_prio	UINT4	N/A	%u	ENUM	1	4	priority of calculation on AOI 5: 1(highest)=tracking, 2=ROF calculation, 3=centroid/limb calculation, 4(lowest)=no calculation(1: HIGHEST), (2: HIGH), (3: LOW), (4: LOWEST),
2221	trc_main_aoi_table	aoi_5_calc_par_threshold	FLOAT4	N/A	%f	NUMBER	0	1	current threshold value for centroid or limb calculation
2222	trc_main_aoi_table	aoi_5_calc_par_range	FLOAT4	pixels	%f	NUMBER	0	100	current range limit value for centroid calculation
2223	trc_main_aoi_table	aoi_5_correct_darkfield	UINT4	N/A	%u	ENUM	0	1	indicates whether darkfield correction is used during centroid/limb and AOI position calculation(0: OFF), (1: ON),
2224	trc_main_aoi_table	aoi_5_correct_flatfield	UINT4	N/A	%u	ENUM	0	1	indicates whether flatfield correction is used during centroid/limb and AOI position calculation(0: OFF), (1: ON),
2225	trc_main_aoi_table	aoi_5_correct_distortion	UINT4	N/A	%u	ENUM	0	1	indicates whether distortion correction is used during centroid/limb and AOI position calculation(0: OFF), (1: ON),
2226	trc_main_aoi_table	aoi_6_sn	UINT4	N/A	%u	NUMBER	0	999	serial number of AOI 6
2227	trc_main_aoi_table	aoi_6_state	UINT4	N/A	%u	ENUM	0	1	current definition status of AOI 6(0: CLEARED), (1: DEFINED),
2228	trc_main_aoi_table	aoi_6_ts_def_time	TIME8	seconds	%d.%09d	NUMBER	0	2147483647	timestamp for last define/clear of AOI 6
2229	trc_main_aoi_table	aoi_6_camera	INT4	N/A	%d	ENUM	0	2	specifies camera on which AOI 6 is defined(0: WFI), (1: FFI), (2: FPI),
2230	trc_main_aoi_table	aoi_6_image_snr	INT4	N/A	%d	NUMBER	10000	39999	serial number of the image referring to AOI 6 data
2231	trc_main_aoi_table	aoi_6_size_pixel_rows	UINT4	N/A	%u	NUMBER	0	150	size of AOI 6 in pixel row values, specified during AOI definition
2232	trc_main_aoi_table	aoi_6_size_pixel_cols	UINT4	N/A	%u	NUMBER	0	150	size of AOI 6 in pixel column values, specified during AOI definition
2233	trc_main_aoi_table	aoi_6_pos_pixel_status	UINT4	N/A	%u	ENUM	0	1	status of AOI 6 pixel coordinates(0: NOT_VALID), (1: VALID),
2234	trc_main_aoi_table	aoi_6_pos_pixel_row_start	UINT4	N/A	%u	NUMBER	0	1023	row position of AOI 6 in pixel coordinates, specified during AOI definition and updated for each new image
2235	trc_main_aoi_table	aoi_6_pos_pixel_col_start	UINT4	N/A	%u	NUMBER	0	1023	column position of AOI 6 in pixel coordinates, specified during AOI definition and updated for each new image
2236	trc_main_aoi_table	aoi_6_pos_pixel_size_rows	UINT4	N/A	%u	NUMBER	0	150	row size of AOI 6 in pixel coordinates, specified during AOI definition and updated for each new image

	A	B	C	D	E	F	G	H	I
2237	trc_main_aoi_table	aoi_6_pos_pixel_size_cols	UINT4	N/A	%u	NUMBER	0	150	column size of AOI 6 in pixel coordinates, specified during AOI definition and updated for each new image
2238	trc_main_aoi_table	aoi_6_pos_pixel_aoi_6_fov	UINT4	N/A	%u	ENUM	0	2	indicates the position of the AOI relative to the image(0: ON_FOV), (1: PART_FOV), (2: OFF_FOV),
2239	trc_main_aoi_table	aoi_6_pos_crf_status	INT4	N/A	%d	ENUM	0	1	status of AOI 6 position in the camera reference frame(0: NOT_VALID), (1: VALID),
2240	trc_main_aoi_table	aoi_6_pos_crf_axis_u	FLOAT8	N/A	%f	NUMBER	-1	1	AOI 6 U axis position in the camera reference frame
2241	trc_main_aoi_table	aoi_6_pos_crf_axis_v	FLOAT8	N/A	%f	NUMBER	-1	1	AOI 6 V axis position in the camera reference frame
2242	trc_main_aoi_table	aoi_6_pos_crf_axis_w	FLOAT8	N/A	%f	NUMBER	-1	1	AOI 6 W axis position in the camera reference frame
2243	trc_main_aoi_table	aoi_6_pos_irf_status	INT4	N/A	%d	ENUM	0	1	status of AOI 6 position in the inertial reference frame(0: NOT_VALID), (1: VALID),
2244	trc_main_aoi_table	aoi_6_pos_irf_axis_u	FLOAT8	N/A	%f	NUMBER	-1	1	AOI 6 U axis position in the inertial reference frame
2245	trc_main_aoi_table	aoi_6_pos_irf_axis_v	FLOAT8	N/A	%f	NUMBER	-1	1	AOI 6 V axis position in the inertial reference frame
2246	trc_main_aoi_table	aoi_6_pos_irf_axis_w	FLOAT8	N/A	%f	NUMBER	-1	1	AOI 6 W axis position in the inertial reference frame
2247	trc_main_aoi_table	aoi_6_pos_tarf_status	INT4	N/A	%d	ENUM	0	1	status of AOI 6 position in the TA reference frame(0: NOT_VALID), (1: VALID),
2248	trc_main_aoi_table	aoi_6_pos_tarf_axis_u	FLOAT8	N/A	%f	NUMBER	-1	1	AOI 6 U axis position in the TA reference frame
2249	trc_main_aoi_table	aoi_6_pos_tarf_axis_v	FLOAT8	N/A	%f	NUMBER	-1	1	AOI 6 V axis position in the TA reference frame
2250	trc_main_aoi_table	aoi_6_pos_tarf_axis_w	FLOAT8	N/A	%f	NUMBER	-1	1	AOI 6 W axis position in the TA reference frame
2251	trc_main_aoi_table	aoi_6_calc_par_type	UINT4	N/A	%u	ENUM	0	2	kind of calculation performed on AOI 6(0: OFF), (1: CENTROID), (2: LIMB),
2252	trc_main_aoi_table	aoi_6_calc_par_prio	UINT4	N/A	%u	ENUM	1	4	priority of calculation on AOI 6: 1(highest)=tracking, 2=ROF calculation, 3=centroid/limb calculation, 4(lowest)=no calculation(1: HIGHEST), (2: HIGH), (3: LOW), (4: LOWEST),
2253	trc_main_aoi_table	aoi_6_calc_par_threshold	FLOAT4	N/A	%f	NUMBER	0	1	current threshold value for centroid or limb calculation
2254	trc_main_aoi_table	aoi_6_calc_par_range	FLOAT4	pixels	%f	NUMBER	0	100	current range limit value for centroid calculation
2255	trc_main_aoi_table	aoi_6_correct_darkfield	UINT4	N/A	%u	ENUM	0	1	indicates whether darkfield correction is used during centroid/limb and AOI position calculation(0: OFF), (1: ON),
2256	trc_main_aoi_table	aoi_6_correct_flatfield	UINT4	N/A	%u	ENUM	0	1	indicates whether flatfield correction is used during centroid/limb and AOI position calculation(0: OFF), (1: ON),
2257	trc_main_aoi_table	aoi_6_correct_distortion	UINT4	N/A	%u	ENUM	0	1	indicates whether distortion correction is used during centroid/limb and AOI position calculation(0: OFF), (1: ON),
2258	trc_main_aoi_table	aoi_7_sn	UINT4	N/A	%u	NUMBER	0	999	serial number of AOI 7
2259	trc_main_aoi_table	aoi_7_state	UINT4	N/A	%u	ENUM	0	1	current definition status of AOI 7(0: CLEARED), (1: DEFINED),
2260	trc_main_aoi_table	aoi_7_ts_def_time	TIME8	seconds	%d.%09d	NUMBER	0	2147483647	timestamp for last define/clear of AOI 7
2261	trc_main_aoi_table	aoi_7_camera	INT4	N/A	%d	ENUM	0	2	specifies camera on which AOI 7 is defined(0: WFI), (1: FFI), (2: FPI),
2262	trc_main_aoi_table	aoi_7_image_snr	INT4	N/A	%d	NUMBER	10000	39999	serial number of the image referring to AOI 7 data
2263	trc_main_aoi_table	aoi_7_size_pixel_rows	UINT4	N/A	%u	NUMBER	0	150	size of AOI 7 in pixel row values, specified during AOI definition
2264	trc_main_aoi_table	aoi_7_size_pixel_cols	UINT4	N/A	%u	NUMBER	0	150	size of AOI 7 in pixel column values, specified during AOI definition
2265	trc_main_aoi_table	aoi_7_pos_pixel_status	UINT4	N/A	%u	ENUM	0	1	status of AOI 7 pixel coordinates(0: NOT_VALID), (1: VALID),
2266	trc_main_aoi_table	aoi_7_pos_pixel_row_start	UINT4	N/A	%u	NUMBER	0	1023	row position of AOI 7 in pixel coordinates, specified during AOI definition and updated for each new image
2267	trc_main_aoi_table	aoi_7_pos_pixel_col_start	UINT4	N/A	%u	NUMBER	0	1023	column position of AOI 7 in pixel coordinates, specified during AOI definition and updated for each new image

	A	B	C	D	E	F	G	H	I
2268	trc_main_aoi_table	aoi_7_pos_pixel_size_rows	UINT4	N/A	%u	NUMBER	0	150	row size of AOI 7 in pixel coordinates, specified during AOI definition and updated for each new image
2269	trc_main_aoi_table	aoi_7_pos_pixel_size_cols	UINT4	N/A	%u	NUMBER	0	150	column size of AOI 7 in pixel coordinates, specified during AOI definition and updated for each new image
2270	trc_main_aoi_table	aoi_7_pos_pixel_aoi_7_fov	UINT4	N/A	%u	ENUM	0	2	indicates the position of the AOI relative to the image(0: ON_FOV), (1: PART_FOV), (2: OFF_FOV),
2271	trc_main_aoi_table	aoi_7_pos_crf_status	INT4	N/A	%d	ENUM	0	1	status of AOI 7 position in the camera reference frame(0: NOT_VALID), (1: VALID),
2272	trc_main_aoi_table	aoi_7_pos_crf_axis_u	FLOAT8	N/A	%f	NUMBER	-1	1	AOI 7 U axis position in the camera reference frame
2273	trc_main_aoi_table	aoi_7_pos_crf_axis_v	FLOAT8	N/A	%f	NUMBER	-1	1	AOI 7 V axis position in the camera reference frame
2274	trc_main_aoi_table	aoi_7_pos_crf_axis_w	FLOAT8	N/A	%f	NUMBER	-1	1	AOI 7 W axis position in the camera reference frame
2275	trc_main_aoi_table	aoi_7_pos_irf_status	INT4	N/A	%d	ENUM	0	1	status of AOI 7 position in the inertial reference frame(0: NOT_VALID), (1: VALID),
2276	trc_main_aoi_table	aoi_7_pos_irf_axis_u	FLOAT8	N/A	%f	NUMBER	-1	1	AOI 7 U axis position in the inertial reference frame
2277	trc_main_aoi_table	aoi_7_pos_irf_axis_v	FLOAT8	N/A	%f	NUMBER	-1	1	AOI 7 V axis position in the inertial reference frame
2278	trc_main_aoi_table	aoi_7_pos_irf_axis_w	FLOAT8	N/A	%f	NUMBER	-1	1	AOI 7 W axis position in the inertial reference frame
2279	trc_main_aoi_table	aoi_7_pos_tarf_status	INT4	N/A	%d	ENUM	0	1	status of AOI 7 position in the TA reference frame(0: NOT_VALID), (1: VALID),
2280	trc_main_aoi_table	aoi_7_pos_tarf_axis_u	FLOAT8	N/A	%f	NUMBER	-1	1	AOI 7 U axis position in the TA reference frame
2281	trc_main_aoi_table	aoi_7_pos_tarf_axis_v	FLOAT8	N/A	%f	NUMBER	-1	1	AOI 7 V axis position in the TA reference frame
2282	trc_main_aoi_table	aoi_7_pos_tarf_axis_w	FLOAT8	N/A	%f	NUMBER	-1	1	AOI 7 W axis position in the TA reference frame
2283	trc_main_aoi_table	aoi_7_calc_par_type	UINT4	N/A	%u	ENUM	0	2	kind of calculation performed on AOI 7(0: OFF), (1: CENTROID), (2: LIMB),
2284	trc_main_aoi_table	aoi_7_calc_par_prio	UINT4	N/A	%u	ENUM	1	4	priority of calculation on AOI 7: 1(highest)=tracking, 2=ROF calculation, 3=centroid/limb calculation, 4(lowest)=no calculation(1: HIGHEST), (2: HIGH), (3: LOW), (4: LOWEST),
2285	trc_main_aoi_table	aoi_7_calc_par_threshold	FLOAT4	N/A	%f	NUMBER	0	1	current threshold value for centroid or limb calculation
2286	trc_main_aoi_table	aoi_7_calc_par_range	FLOAT4	pixels	%f	NUMBER	0	100	current range limit value for centroid calculation
2287	trc_main_aoi_table	aoi_7_correct_darkfield	UINT4	N/A	%u	ENUM	0	1	indicates whether darkfield correction is used during centroid/limb and AOI position calculation(0: OFF), (1: ON),
2288	trc_main_aoi_table	aoi_7_correct_flatfield	UINT4	N/A	%u	ENUM	0	1	indicates whether flatfield correction is used during centroid/limb and AOI position calculation(0: OFF), (1: ON),
2289	trc_main_aoi_table	aoi_7_correct_distortion	UINT4	N/A	%u	ENUM	0	1	indicates whether distortion correction is used during centroid/limb and AOI position calculation(0: OFF), (1: ON),
2290	trc_main_aoi_table	aoi_8_sn	UINT4	N/A	%u	NUMBER	0	999	serial number of AOI 8
2291	trc_main_aoi_table	aoi_8_state	UINT4	N/A	%u	ENUM	0	1	current definition status of AOI 8(0: CLEARED), (1: DEFINED),
2292	trc_main_aoi_table	aoi_8_ts_def_time	TIME8	seconds	%d.%09d	NUMBER	0	2147483647	timestamp for last define/clear of AOI 8
2293	trc_main_aoi_table	aoi_8_camera	INT4	N/A	%d	ENUM	0	2	specifies camera on which AOI 8 is defined(0: WFI), (1: FFI), (2: FPI),
2294	trc_main_aoi_table	aoi_8_image_snr	INT4	N/A	%d	NUMBER	10000	39999	serial number of the image referring to AOI 8 data
2295	trc_main_aoi_table	aoi_8_size_pixel_rows	UINT4	N/A	%u	NUMBER	0	150	size of AOI 8 in pixel row values, specified during AOI definition
2296	trc_main_aoi_table	aoi_8_size_pixel_cols	UINT4	N/A	%u	NUMBER	0	150	size of AOI 8 in pixel column values, specified during AOI definition
2297	trc_main_aoi_table	aoi_8_pos_pixel_status	UINT4	N/A	%u	ENUM	0	1	status of AOI 8 pixel coordinates(0: NOT_VALID), (1: VALID),
2298	trc_main_aoi_table	aoi_8_pos_pixel_row_start	UINT4	N/A	%u	NUMBER	0	1023	row position of AOI 8 in pixel coordinates, specified during AOI definition and updated for each new image

	A	B	C	D	E	F	G	H	I
2299	trc_main_aoi_table	aoi_8_pos_pixel_col_start	UINT4	N/A	%u	NUMBER	0	1023	column position of AOI 8 in pixel coordinates, specified during AOI definition and updated for each new image
2300	trc_main_aoi_table	aoi_8_pos_pixel_size_rows	UINT4	N/A	%u	NUMBER	0	150	row size of AOI 8 in pixel coordinates, specified during AOI definition and updated for each new image
2301	trc_main_aoi_table	aoi_8_pos_pixel_size_cols	UINT4	N/A	%u	NUMBER	0	150	column size of AOI 8 in pixel coordinates, specified during AOI definition and updated for each new image
2302	trc_main_aoi_table	aoi_8_pos_pixel_aoi_8_fov	UINT4	N/A	%u	ENUM	0	2	indicates the position of the AOI relative to the image(0: ON_FOV), (1: PART_FOV), (2: OFF_FOV),
2303	trc_main_aoi_table	aoi_8_pos_crf_status	INT4	N/A	%d	ENUM	0	1	status of AOI 8 position in the camera reference frame(0: NOT_VALID), (1: VALID),
2304	trc_main_aoi_table	aoi_8_pos_crf_axis_u	FLOAT8	N/A	%f	NUMBER	-1	1	AOI 8 U axis position in the camera reference frame
2305	trc_main_aoi_table	aoi_8_pos_crf_axis_v	FLOAT8	N/A	%f	NUMBER	-1	1	AOI 8 V axis position in the camera reference frame
2306	trc_main_aoi_table	aoi_8_pos_crf_axis_w	FLOAT8	N/A	%f	NUMBER	-1	1	AOI 8 W axis position in the camera reference frame
2307	trc_main_aoi_table	aoi_8_pos_irf_status	INT4	N/A	%d	ENUM	0	1	status of AOI 8 position in the inertial reference frame(0: NOT_VALID), (1: VALID),
2308	trc_main_aoi_table	aoi_8_pos_irf_axis_u	FLOAT8	N/A	%f	NUMBER	-1	1	AOI 8 U axis position in the inertial reference frame
2309	trc_main_aoi_table	aoi_8_pos_irf_axis_v	FLOAT8	N/A	%f	NUMBER	-1	1	AOI 8 V axis position in the inertial reference frame
2310	trc_main_aoi_table	aoi_8_pos_irf_axis_w	FLOAT8	N/A	%f	NUMBER	-1	1	AOI 8 W axis position in the inertial reference frame
2311	trc_main_aoi_table	aoi_8_pos_tarf_status	INT4	N/A	%d	ENUM	0	1	status of AOI 8 position in the TA reference frame(0: NOT_VALID), (1: VALID),
2312	trc_main_aoi_table	aoi_8_pos_tarf_axis_u	FLOAT8	N/A	%f	NUMBER	-1	1	AOI 8 U axis position in the TA reference frame
2313	trc_main_aoi_table	aoi_8_pos_tarf_axis_v	FLOAT8	N/A	%f	NUMBER	-1	1	AOI 8 V axis position in the TA reference frame
2314	trc_main_aoi_table	aoi_8_pos_tarf_axis_w	FLOAT8	N/A	%f	NUMBER	-1	1	AOI 8 W axis position in the TA reference frame
2315	trc_main_aoi_table	aoi_8_calc_par_type	UINT4	N/A	%u	ENUM	0	2	kind of calculation performed on AOI 8(0: OFF), (1: CENTROID), (2: LIMB),
2316	trc_main_aoi_table	aoi_8_calc_par_prio	UINT4	N/A	%u	ENUM	1	4	priority of calculation on AOI 8: 1(highest)=tracking, 2=ROF calculation, 3=centroid/limb calculation, 4(lowest)=no calculation(1: HIGHEST), (2: HIGH), (3: LOW), (4: LOWEST),
2317	trc_main_aoi_table	aoi_8_calc_par_threshold	FLOAT4	N/A	%f	NUMBER	0	1	current threshold value for centroid or limb calculation
2318	trc_main_aoi_table	aoi_8_calc_par_range	FLOAT4	pixels	%f	NUMBER	0	100	current range limit value for centroid calculation
2319	trc_main_aoi_table	aoi_8_correct_darkfield	UINT4	N/A	%u	ENUM	0	1	indicates whether darkfield correction is used during centroid/limb and AOI position calculation(0: OFF), (1: ON),
2320	trc_main_aoi_table	aoi_8_correct_flatfield	UINT4	N/A	%u	ENUM	0	1	indicates whether flatfield correction is used during centroid/limb and AOI position calculation(0: OFF), (1: ON),
2321	trc_main_aoi_table	aoi_8_correct_distortion	UINT4	N/A	%u	ENUM	0	1	indicates whether distortion correction is used during centroid/limb and AOI position calculation(0: OFF), (1: ON),
2322	trc_centroid_table								tracker AOI centroid table data
2323	trc_centroid_table	packet	BINARY	N/A	%s	NUMBER			data packet as it was received from the TA
2324	trc_centroid_table	pkt_timestamp	TIME8	seconds	%d.%09d	NUMBER	0	2147483647	time data packet was constructed by TA
2325	trc_centroid_table	timestamp	TIME8	seconds	%d.%09d	NUMBER	0	2147483647	time at which the event happened or was captured
2326	trc_centroid_table	table_id	UINT4	N/A	%u	NUMBER	0	4294967295	ID of the current table
2327	trc_centroid_table	centr_1_state	UINT4	N/A	%u	ENUM	0	1	indicates whether centroid calculation is on/off within this AOI(0: OFF), (1: ON),
2328	trc_centroid_table	centr_1_camera_id	UINT4	N/A	%u	ENUM	0	2	specifies the camera which is related to the centroid data for this AOI(0: WFI), (1: FFI), (2: FPI),

	A	B	C	D	E	F	G	H	I
2329	trc_centroid_table	centr_1_aoi_snr	UINT4	N/A	%u	NUMBER	0	999	serial number of the AOI to which the centroid data applies
2330	trc_centroid_table	centr_1_aoi_fov	UINT4	N/A	%u	ENUM	0	2	reports the position of the AOI relative to the imager FOV(0: ON_FOV), (1: PART_FOV), (2: OFF_FOV),
2331	trc_centroid_table	centr_1_image_snr	INT4	N/A	%d	NUMBER	10000	39999	specifies the image which is related to the centroid data for this AOI
2332	trc_centroid_table	centr_1_ts_exp_cent_time	TIME8	seconds	%d.%09d	NUMBER	0	2147483647	timestamp referring to center of image exposure
2333	trc_centroid_table	centr_1_state_move_exp	UINT4	N/A	%u	ENUM	0	3	reports move status of telescope during image exposure(0: LOCKED), (1: SETTLED), (2: TRANSIENT), (3: NOT_READY),
2334	trc_centroid_table	centr_1_state_tsc_exp	UINT4	N/A	%u	ENUM	0	6	reports TASCU status during image exposure(0: ACTIVE), (1: MOTION_PROG_TRACK), (2: MOTION_SLEW), (3: MOTION_POS_REL), (4: MOTION_POS_ABS), (5: NOT_READY), (6: TSC_DATA_MISSING),
2335	trc_centroid_table	centr_1_pix_row	FLOAT4	N/A	%f	NUMBER	0	1023	calculated centroid data in row coordinate of the raw pixel image
2336	trc_centroid_table	centr_1_pix_col	FLOAT4	N/A	%f	NUMBER	0	1023	calculated centroid data in column coordinate of the raw pixel image
2337	trc_centroid_table	centr_1_crf_axis_u	FLOAT8	N/A	%f	NUMBER	-1	1	calculated centroid data, transformed into the U axis of the respective camera reference frame
2338	trc_centroid_table	centr_1_crf_axis_v	FLOAT8	N/A	%f	NUMBER	-1	1	calculated centroid data, transformed into the V axis of the respective camera reference frame
2339	trc_centroid_table	centr_1_crf_axis_w	FLOAT8	N/A	%f	NUMBER	-1	1	calculated centroid data, transformed into the W axis of the respective camera reference frame
2340	trc_centroid_table	centr_1_irf_axis_u	FLOAT8	N/A	%f	NUMBER	-1	1	calculated centroid data, transformed into the U axis of the inertial reference frame
2341	trc_centroid_table	centr_1_irf_axis_v	FLOAT8	N/A	%f	NUMBER	-1	1	calculated centroid data, transformed into the V axis of the inertial reference frame
2342	trc_centroid_table	centr_1_irf_axis_w	FLOAT8	N/A	%f	NUMBER	-1	1	calculated centroid data, transformed into the W axis of the inertial reference frame
2343	trc_centroid_table	centr_1_tarf_axis_u	FLOAT8	N/A	%f	NUMBER	-1	1	calculated centroid data, transformed into the U axis of the TA reference frame
2344	trc_centroid_table	centr_1_tarf_axis_v	FLOAT8	N/A	%f	NUMBER	-1	1	calculated centroid data, transformed into the V axis of the TA reference frame
2345	trc_centroid_table	centr_1_tarf_axis_w	FLOAT8	N/A	%f	NUMBER	-1	1	calculated centroid data, transformed into the W axis of the TA reference frame
2346	trc_centroid_table	centr_1_pixel_format	INT4	N/A	%d	ENUM	0	1	pixel format of image used for centroid calculation(0: 8_BIT), (1: 14_BIT),
2347	trc_centroid_table	centr_1_pixel_group	INT4	N/A	%d	ENUM	0	2	pixel grouping of image used for centroid calculation(0: 1x1), (1: 2x2), (2: 4x4),
2348	trc_centroid_table	centr_1_quality	FLOAT4	N/A	%f	NUMBER	0	1	quality estimate of centroid calculation
2349	trc_centroid_table	centr_1_darkval	FLOAT4	N/A	%f	NUMBER	0	16383	dark value, median filtered minimum pixel intensity in the AOI
2350	trc_centroid_table	centr_1_th_intens	FLOAT4	N/A	%f	NUMBER	0	16383	threshold intensity, minimum pixel intensity used for centroid or limb calculation
2351	trc_centroid_table	centr_1_aoi_maxval	FLOAT4	N/A	%f	NUMBER	0	16383	max. value, maximum pixel intensity in the AOI
2352	trc_centroid_table	centr_1_height	FLOAT4	N/A	%f	NUMBER	0	16383	estimation of the intensity of the centroid by calculating the mean value of pixels weighted with the CentroidWindow matrix values (CentroidWindow is a 5x5 matrix with values set by configuration command trc_config)
2353	trc_centroid_table	centr_1_usedpix	UINT4	pixels	%u	NUMBER	0	22500	number of pixels in the AOI used for the centroid or limb calculation

	A	B	C	D	E	F	G	H	I
2354	trc_centroid_table	centr_1_intens	FLOAT4	N/A	%f	NUMBER	0	16383	centroid intensity, intensity at centroid position
2355	trc_centroid_table	centr_2_state	UINT4	N/A	%u	ENUM	0	1	indicates whether centroid calculation is on/off within this AOI(0: OFF), (1: ON),
2356	trc_centroid_table	centr_2_camera_id	UINT4	N/A	%u	ENUM	0	2	specifies the camera which is related to the centroid data for this AOI(0: WFI), (1: FFI), (2: FPI),
2357	trc_centroid_table	centr_2_aoi_snr	UINT4	N/A	%u	NUMBER	0	999	serial number of the AOI to which the centroid data applies
2358	trc_centroid_table	centr_2_aoi_fov	UINT4	N/A	%u	ENUM	0	2	reports the position of the AOI relative to the imager FOV(0: ON_FOV), (1: PART_FOV), (2: OFF_FOV),
2359	trc_centroid_table	centr_2_image_snr	INT4	N/A	%d	NUMBER	10000	39999	specifies the image which is related to the centroid data for this AOI
2360	trc_centroid_table	centr_2_ts_exp_cent_time	TIME8	seconds	%d.%09d	NUMBER	0	2147483647	timestamp referring to center of image exposure
2361	trc_centroid_table	centr_2_state_move_exp	UINT4	N/A	%u	ENUM	0	3	reports move status of telescope during image exposure(0: LOCKED), (1: SETTLED), (2: TRANSIENT), (3: NOT_READY),
2362	trc_centroid_table	centr_2_state_tsc_exp	UINT4	N/A	%u	ENUM	0	6	reports TASCU status during image exposure(0: ACTIVE), (1: MOTION_PROG_TRACK), (2: MOTION_SLEW), (3: MOTION_POS_REL), (4: MOTION_POS_ABS), (5: NOT_READY), (6: TSC_DATA_MISSING),
2363	trc_centroid_table	centr_2_pix_row	FLOAT4	N/A	%f	NUMBER	0	1023	calculated centroid data in row coordinate of the raw pixel image
2364	trc_centroid_table	centr_2_pix_col	FLOAT4	N/A	%f	NUMBER	0	1023	calculated centroid data in column coordinate of the raw pixel image
2365	trc_centroid_table	centr_2_crf_axis_u	FLOAT8	N/A	%f	NUMBER	-1	1	calculated centroid data, transformed into the U axis of the respective camera reference frame
2366	trc_centroid_table	centr_2_crf_axis_v	FLOAT8	N/A	%f	NUMBER	-1	1	calculated centroid data, transformed into the V axis of the respective camera reference frame
2367	trc_centroid_table	centr_2_crf_axis_w	FLOAT8	N/A	%f	NUMBER	-1	1	calculated centroid data, transformed into the W axis of the respective camera reference frame
2368	trc_centroid_table	centr_2_irf_axis_u	FLOAT8	N/A	%f	NUMBER	-1	1	calculated centroid data, transformed into the U axis of the inertial reference frame
2369	trc_centroid_table	centr_2_irf_axis_v	FLOAT8	N/A	%f	NUMBER	-1	1	calculated centroid data, transformed into the V axis of the inertial reference frame
2370	trc_centroid_table	centr_2_irf_axis_w	FLOAT8	N/A	%f	NUMBER	-1	1	calculated centroid data, transformed into the W axis of the inertial reference frame
2371	trc_centroid_table	centr_2_tarf_axis_u	FLOAT8	N/A	%f	NUMBER	-1	1	calculated centroid data, transformed into the U axis of the TA reference frame
2372	trc_centroid_table	centr_2_tarf_axis_v	FLOAT8	N/A	%f	NUMBER	-1	1	calculated centroid data, transformed into the V axis of the TA reference frame
2373	trc_centroid_table	centr_2_tarf_axis_w	FLOAT8	N/A	%f	NUMBER	-1	1	calculated centroid data, transformed into the W axis of the TA reference frame
2374	trc_centroid_table	centr_2_pixel_format	INT4	N/A	%d	ENUM	0	1	pixel format of image used for centroid calculation(0: 8_BIT), (1: 14_BIT),
2375	trc_centroid_table	centr_2_pixel_group	INT4	N/A	%d	ENUM	0	2	pixel grouping of image used for centroid calculation(0: 1x1), (1: 2x2), (2: 4x4),
2376	trc_centroid_table	centr_2_quality	FLOAT4	N/A	%f	NUMBER	0	1	quality estimate of centroid calculation
2377	trc_centroid_table	centr_2_darkval	FLOAT4	N/A	%f	NUMBER	0	16383	dark value, median filtered minimum pixel intensity in the AOI
2378	trc_centroid_table	centr_2_th_intens	FLOAT4	N/A	%f	NUMBER	0	16383	threshold intensity, minimum pixel intensity used for centroid or limb calculation
2379	trc_centroid_table	centr_2_aoi_maxval	FLOAT4	N/A	%f	NUMBER	0	16383	max. value, maximum pixel intensity in the AOI

	A	B	C	D	E	F	G	H	I
2380	trc_centroid_table	centr_2_height	FLOAT4	N/A	%f	NUMBER	0	16383	estimation of the intensity of the centroid by calculating the mean value of pixels weighted with the CentroidWindow matrix values (CentroidWindow is a 5x5 matrix with values set by configuration command trc_config)
2381	trc_centroid_table	centr_2_usedpix	UINT4	pixels	%u	NUMBER	0	22500	number of pixels in the AOI used for the centroid or limb calculation
2382	trc_centroid_table	centr_2_intens	FLOAT4	N/A	%f	NUMBER	0	16383	centroid intensity, intensity at centroid position
2383	trc_centroid_table	centr_3_state	UINT4	N/A	%u	ENUM	0	1	indicates whether centroid calculation is on/off within this AOI(0: OFF), (1: ON),
2384	trc_centroid_table	centr_3_camera_id	UINT4	N/A	%u	ENUM	0	2	specifies the camera which is related to the centroid data for this AOI(0: WFI), (1: FFI), (2: FPI),
2385	trc_centroid_table	centr_3_aoi_snr	UINT4	N/A	%u	NUMBER	0	999	serial number of the AOI to which the centroid data applies
2386	trc_centroid_table	centr_3_aoi_fov	UINT4	N/A	%u	ENUM	0	2	reports the position of the AOI relative to the imager FOV(0: ON_FOV), (1: PART_FOV), (2: OFF_FOV),
2387	trc_centroid_table	centr_3_image_snr	INT4	N/A	%d	NUMBER	10000	39999	specifies the image which is related to the centroid data for this AOI
2388	trc_centroid_table	centr_3_ts_exp_cent_time	TIME8	seconds	%d.%09d	NUMBER	0	2147483647	timestamp referring to center of image exposure
2389	trc_centroid_table	centr_3_state_move_exp	UINT4	N/A	%u	ENUM	0	3	reports move status of telescope during image exposure(0: LOCKED), (1: SETTLED), (2: TRANSIENT), (3: NOT_READY),
2390	trc_centroid_table	centr_3_state_tsc_exp	UINT4	N/A	%u	ENUM	0	6	reports TASCU status during image exposure(0: ACTIVE), (1: MOTION_PROG_TRACK), (2: MOTION_SLEW), (3: MOTION_POS_REL), (4: MOTION_POS_ABS), (5: NOT_READY), (6: TSC_DATA_MISSING),
2391	trc_centroid_table	centr_3_pix_row	FLOAT4	N/A	%f	NUMBER	0	1023	calculated centroid data in row coordinate of the raw pixel image
2392	trc_centroid_table	centr_3_pix_col	FLOAT4	N/A	%f	NUMBER	0	1023	calculated centroid data in column coordinate of the raw pixel image
2393	trc_centroid_table	centr_3_crf_axis_u	FLOAT8	N/A	%f	NUMBER	-1	1	calculated centroid data, transformed into the U axis of the respective camera reference frame
2394	trc_centroid_table	centr_3_crf_axis_v	FLOAT8	N/A	%f	NUMBER	-1	1	calculated centroid data, transformed into the V axis of the respective camera reference frame
2395	trc_centroid_table	centr_3_crf_axis_w	FLOAT8	N/A	%f	NUMBER	-1	1	calculated centroid data, transformed into the W axis of the respective camera reference frame
2396	trc_centroid_table	centr_3_irf_axis_u	FLOAT8	N/A	%f	NUMBER	-1	1	calculated centroid data, transformed into the U axis of the inertial reference frame
2397	trc_centroid_table	centr_3_irf_axis_v	FLOAT8	N/A	%f	NUMBER	-1	1	calculated centroid data, transformed into the V axis of the inertial reference frame
2398	trc_centroid_table	centr_3_irf_axis_w	FLOAT8	N/A	%f	NUMBER	-1	1	calculated centroid data, transformed into the W axis of the inertial reference frame
2399	trc_centroid_table	centr_3_tarf_axis_u	FLOAT8	N/A	%f	NUMBER	-1	1	calculated centroid data, transformed into the U axis of the TA reference frame
2400	trc_centroid_table	centr_3_tarf_axis_v	FLOAT8	N/A	%f	NUMBER	-1	1	calculated centroid data, transformed into the V axis of the TA reference frame
2401	trc_centroid_table	centr_3_tarf_axis_w	FLOAT8	N/A	%f	NUMBER	-1	1	calculated centroid data, transformed into the W axis of the TA reference frame
2402	trc_centroid_table	centr_3_pixel_format	INT4	N/A	%d	ENUM	0	1	pixel format of image used for centroid calculation(0: 8_BIT), (1: 14_BIT),
2403	trc_centroid_table	centr_3_pixel_group	INT4	N/A	%d	ENUM	0	2	pixel grouping of image used for centroid calculation(0: 1x1), (1: 2x2), (2: 4x4),
2404	trc_centroid_table	centr_3_quality	FLOAT4	N/A	%f	NUMBER	0	1	quality estimate of centroid calculation

	A	B	C	D	E	F	G	H	I
2405	trc_centroid_table	centr_3_darkval	FLOAT4	N/A	%f	NUMBER	0	16383	dark value, median filtered minimum pixel intensity in the AOI
2406	trc_centroid_table	centr_3_th_intens	FLOAT4	N/A	%f	NUMBER	0	16383	threshold intensity, minimum pixel intensity used for centroid or limb calculation
2407	trc_centroid_table	centr_3_aoi_maxval	FLOAT4	N/A	%f	NUMBER	0	16383	max. value, maximum pixel intensity in the AOI
2408	trc_centroid_table	centr_3_height	FLOAT4	N/A	%f	NUMBER	0	16383	estimation of the intensity of the centroid by calculating the mean value of pixels weighted with the CentroidWindow matrix values (CentroidWindow is a 5x5 matrix with values set by configuration command trc_config)
2409	trc_centroid_table	centr_3_usedpix	UINT4	pixels	%u	NUMBER	0	22500	number of pixels in the AOI used for the centroid or limb calculation
2410	trc_centroid_table	centr_3_intens	FLOAT4	N/A	%f	NUMBER	0	16383	centroid intensity, intensity at centroid position
2411	trc_centroid_table	centr_4_state	UINT4	N/A	%u	ENUM	0	1	indicates whether centroid calculation is on/off within this AOI(0: OFF), (1: ON),
2412	trc_centroid_table	centr_4_camera_id	UINT4	N/A	%u	ENUM	0	2	specifies the camera which is related to the centroid data for this AOI(0: WFI), (1: FFI), (2: FPI),
2413	trc_centroid_table	centr_4_aoi_snr	UINT4	N/A	%u	NUMBER	0	999	serial number of the AOI to which the centroid data applies
2414	trc_centroid_table	centr_4_aoi_fov	UINT4	N/A	%u	ENUM	0	2	reports the position of the AOI relative to the imager FOV(0: ON_FOV), (1: PART_FOV), (2: OFF_FOV),
2415	trc_centroid_table	centr_4_image_snr	INT4	N/A	%d	NUMBER	10000	39999	specifies the image which is related to the centroid data for this AOI
2416	trc_centroid_table	centr_4_ts_exp_cent_time	TIME8	seconds	%d.%09d	NUMBER	0	2147483647	timestamp referring to center of image exposure
2417	trc_centroid_table	centr_4_state_move_exp	UINT4	N/A	%u	ENUM	0	3	reports move status of telescope during image exposure(0: LOCKED), (1: SETTLED), (2: TRANSIENT), (3: NOT_READY),
2418	trc_centroid_table	centr_4_state_tsc_exp	UINT4	N/A	%u	ENUM	0	6	reports TASCU status during image exposure(0: ACTIVE), (1: MOTION_PROG_TRACK), (2: MOTION_SLEW), (3: MOTION_POS_REL), (4: MOTION_POS_ABS), (5: NOT_READY), (6: TSC_DATA_MISSING),
2419	trc_centroid_table	centr_4_pix_row	FLOAT4	N/A	%f	NUMBER	0	1023	calculated centroid data in row coordinate of the raw pixel image
2420	trc_centroid_table	centr_4_pix_col	FLOAT4	N/A	%f	NUMBER	0	1023	calculated centroid data in column coordinate of the raw pixel image
2421	trc_centroid_table	centr_4_crf_axis_u	FLOAT8	N/A	%f	NUMBER	-1	1	calculated centroid data, transformed into the U axis of the respective camera reference frame
2422	trc_centroid_table	centr_4_crf_axis_v	FLOAT8	N/A	%f	NUMBER	-1	1	calculated centroid data, transformed into the V axis of the respective camera reference frame
2423	trc_centroid_table	centr_4_crf_axis_w	FLOAT8	N/A	%f	NUMBER	-1	1	calculated centroid data, transformed into the W axis of the respective camera reference frame
2424	trc_centroid_table	centr_4_irf_axis_u	FLOAT8	N/A	%f	NUMBER	-1	1	calculated centroid data, transformed into the U axis of the inertial reference frame
2425	trc_centroid_table	centr_4_irf_axis_v	FLOAT8	N/A	%f	NUMBER	-1	1	calculated centroid data, transformed into the V axis of the inertial reference frame
2426	trc_centroid_table	centr_4_irf_axis_w	FLOAT8	N/A	%f	NUMBER	-1	1	calculated centroid data, transformed into the W axis of the inertial reference frame
2427	trc_centroid_table	centr_4_tarf_axis_u	FLOAT8	N/A	%f	NUMBER	-1	1	calculated centroid data, transformed into the U axis of the TA reference frame
2428	trc_centroid_table	centr_4_tarf_axis_v	FLOAT8	N/A	%f	NUMBER	-1	1	calculated centroid data, transformed into the V axis of the TA reference frame
2429	trc_centroid_table	centr_4_tarf_axis_w	FLOAT8	N/A	%f	NUMBER	-1	1	calculated centroid data, transformed into the W axis of the TA reference frame

	A	B	C	D	E	F	G	H	I
2430	trc_centroid_table	centr_4_pixel_format	INT4	N/A	%d	ENUM	0	1	pixel format of image used for centroid calculation(0: 8_BIT), (1: 14_BIT),
2431	trc_centroid_table	centr_4_pixel_group	INT4	N/A	%d	ENUM	0	2	pixel grouping of image used for centroid calculation(0: 1x1), (1: 2x2), (2: 4x4),
2432	trc_centroid_table	centr_4_quality	FLOAT4	N/A	%f	NUMBER	0	1	quality estimate of centroid calculation
2433	trc_centroid_table	centr_4_darkval	FLOAT4	N/A	%f	NUMBER	0	16383	dark value, median filtered minimum pixel intensity in the AOI
2434	trc_centroid_table	centr_4_th_intens	FLOAT4	N/A	%f	NUMBER	0	16383	threshold intensity, minimum pixel intensity used for centroid or limb calculation
2435	trc_centroid_table	centr_4_aoi_maxval	FLOAT4	N/A	%f	NUMBER	0	16383	max. value, maximum pixel intensity in the AOI
2436	trc_centroid_table	centr_4_height	FLOAT4	N/A	%f	NUMBER	0	16383	estimation of the intensity of the centroid by calculating the mean value of pixels weighted with the CentroidWindow matrix values (CentroidWindow is a 5x5 matrix with values set by configuration command trc_config)
2437	trc_centroid_table	centr_4_usedpix	UINT4	pixels	%u	NUMBER	0	22500	number of pixels in the AOI used for the centroid or limb calculation
2438	trc_centroid_table	centr_4_intens	FLOAT4	N/A	%f	NUMBER	0	16383	centroid intensity, intensity at centroid position
2439	trc_centroid_table	centr_5_state	UINT4	N/A	%u	ENUM	0	1	indicates whether centroid calculation is on/off within this AOI(0: OFF), (1: ON),
2440	trc_centroid_table	centr_5_camera_id	UINT4	N/A	%u	ENUM	0	2	specifies the camera which is related to the centroid data for this AOI(0: WFI), (1: FFI), (2: FPI),
2441	trc_centroid_table	centr_5_aoi_snr	UINT4	N/A	%u	NUMBER	0	999	serial number of the AOI to which the centroid data applies
2442	trc_centroid_table	centr_5_aoi_fov	UINT4	N/A	%u	ENUM	0	2	reports the position of the AOI relative to the imager FOV(0: ON_FOV), (1: PART_FOV), (2: OFF_FOV),
2443	trc_centroid_table	centr_5_image_snr	INT4	N/A	%d	NUMBER	10000	39999	specifies the image which is related to the centroid data for this AOI
2444	trc_centroid_table	centr_5_ts_exp_cent_time	TIME8	seconds	%d.%09d	NUMBER	0	2147483647	timestamp referring to center of image exposure
2445	trc_centroid_table	centr_5_state_move_exp	UINT4	N/A	%u	ENUM	0	3	reports move status of telescope during image exposure(0: LOCKED), (1: SETTLED), (2: TRANSIENT), (3: NOT_READY),
2446	trc_centroid_table	centr_5_state_tsc_exp	UINT4	N/A	%u	ENUM	0	6	reports TASCU status during image exposure(0: ACTIVE), (1: MOTION_PROG_TRACK), (2: MOTION_SLEW), (3: MOTION_POS_REL), (4: MOTION_POS_ABS), (5: NOT_READY), (6: TSC_DATA_MISSING),
2447	trc_centroid_table	centr_5_pix_row	FLOAT4	N/A	%f	NUMBER	0	1023	calculated centroid data in row coordinate of the raw pixel image
2448	trc_centroid_table	centr_5_pix_col	FLOAT4	N/A	%f	NUMBER	0	1023	calculated centroid data in column coordinate of the raw pixel image
2449	trc_centroid_table	centr_5_crf_axis_u	FLOAT8	N/A	%f	NUMBER	-1	1	calculated centroid data, transformed into the U axis of the respective camera reference frame
2450	trc_centroid_table	centr_5_crf_axis_v	FLOAT8	N/A	%f	NUMBER	-1	1	calculated centroid data, transformed into the V axis of the respective camera reference frame
2451	trc_centroid_table	centr_5_crf_axis_w	FLOAT8	N/A	%f	NUMBER	-1	1	calculated centroid data, transformed into the W axis of the respective camera reference frame
2452	trc_centroid_table	centr_5_irf_axis_u	FLOAT8	N/A	%f	NUMBER	-1	1	calculated centroid data, transformed into the U axis of the inertial reference frame
2453	trc_centroid_table	centr_5_irf_axis_v	FLOAT8	N/A	%f	NUMBER	-1	1	calculated centroid data, transformed into the V axis of the inertial reference frame
2454	trc_centroid_table	centr_5_irf_axis_w	FLOAT8	N/A	%f	NUMBER	-1	1	calculated centroid data, transformed into the W axis of the inertial reference frame

	A	B	C	D	E	F	G	H	I
2455	trc_centroid_table	centr_5_tarf_axis_u	FLOAT8	N/A	%f	NUMBER	-1	1	calculated centroid data, transformed into the U axis of the TA reference frame
2456	trc_centroid_table	centr_5_tarf_axis_v	FLOAT8	N/A	%f	NUMBER	-1	1	calculated centroid data, transformed into the V axis of the TA reference frame
2457	trc_centroid_table	centr_5_tarf_axis_w	FLOAT8	N/A	%f	NUMBER	-1	1	calculated centroid data, transformed into the W axis of the TA reference frame
2458	trc_centroid_table	centr_5_pixel_format	INT4	N/A	%d	ENUM	0	1	pixel format of image used for centroid calculation(0: 8_BIT), (1: 14_BIT),
2459	trc_centroid_table	centr_5_pixel_group	INT4	N/A	%d	ENUM	0	2	pixel grouping of image used for centroid calculation(0: 1x1), (1: 2x2), (2: 4x4),
2460	trc_centroid_table	centr_5_quality	FLOAT4	N/A	%f	NUMBER	0	1	quality estimate of centroid calculation
2461	trc_centroid_table	centr_5_darkval	FLOAT4	N/A	%f	NUMBER	0	16383	dark value, median filtered minimum pixel intensity in the AOI
2462	trc_centroid_table	centr_5_th_intens	FLOAT4	N/A	%f	NUMBER	0	16383	threshold intensity, minimum pixel intensity used for centroid or limb calculation
2463	trc_centroid_table	centr_5_aoi_maxval	FLOAT4	N/A	%f	NUMBER	0	16383	max. value, maximum pixel intensity in the AOI
2464	trc_centroid_table	centr_5_height	FLOAT4	N/A	%f	NUMBER	0	16383	estimation of the intensity of the centroid by calculating the mean value of pixels weighted with the CentroidWindow matrix values (CentroidWindow is a 5x5 matrix with values set by configuration command trc_config)
2465	trc_centroid_table	centr_5_usedpix	UINT4	pixels	%u	NUMBER	0	22500	number of pixels in the AOI used for the centroid or limb calculation
2466	trc_centroid_table	centr_5_intens	FLOAT4	N/A	%f	NUMBER	0	16383	centroid intensity, intensity at centroid position
2467	trc_centroid_table	centr_6_state	UINT4	N/A	%u	ENUM	0	1	indicates whether centroid calculation is on/off within this AOI(0: OFF), (1: ON),
2468	trc_centroid_table	centr_6_camera_id	UINT4	N/A	%u	ENUM	0	2	specifies the camera which is related to the centroid data for this AOI(0: WFI), (1: FFI), (2: FPI),
2469	trc_centroid_table	centr_6_aoi_snr	UINT4	N/A	%u	NUMBER	0	999	serial number of the AOI to which the centroid data applies
2470	trc_centroid_table	centr_6_aoi_fov	UINT4	N/A	%u	ENUM	0	2	reports the position of the AOI relative to the imager FOV(0: ON_FOV), (1: PART_FOV), (2: OFF_FOV),
2471	trc_centroid_table	centr_6_image_snr	INT4	N/A	%d	NUMBER	10000	39999	specifies the image which is related to the centroid data for this AOI
2472	trc_centroid_table	centr_6_ts_exp_cent_time	TIME8	seconds	%d.%09d	NUMBER	0	2147483647	timestamp referring to center of image exposure
2473	trc_centroid_table	centr_6_state_move_exp	UINT4	N/A	%u	ENUM	0	3	reports move status of telescope during image exposure(0: LOCKED), (1: SETTLED), (2: TRANSIENT), (3: NOT_READY),
2474	trc_centroid_table	centr_6_state_tsc_exp	UINT4	N/A	%u	ENUM	0	6	reports TASCU status during image exposure(0: ACTIVE), (1: MOTION_PROG_TRACK), (2: MOTION_SLEW), (3: MOTION_POS_REL), (4: MOTION_POS_ABS), (5: NOT_READY), (6: TSC_DATA_MISSING),
2475	trc_centroid_table	centr_6_pix_row	FLOAT4	N/A	%f	NUMBER	0	1023	calculated centroid data in row coordinate of the raw pixel image
2476	trc_centroid_table	centr_6_pix_col	FLOAT4	N/A	%f	NUMBER	0	1023	calculated centroid data in column coordinate of the raw pixel image
2477	trc_centroid_table	centr_6_crf_axis_u	FLOAT8	N/A	%f	NUMBER	-1	1	calculated centroid data, transformed into the U axis of the respective camera reference frame
2478	trc_centroid_table	centr_6_crf_axis_v	FLOAT8	N/A	%f	NUMBER	-1	1	calculated centroid data, transformed into the V axis of the respective camera reference frame
2479	trc_centroid_table	centr_6_crf_axis_w	FLOAT8	N/A	%f	NUMBER	-1	1	calculated centroid data, transformed into the W axis of the respective camera reference frame

	A	B	C	D	E	F	G	H	I
2480	trc_centroid_table	centr_6_irf_axis_u	FLOAT8	N/A	%f	NUMBER	-1	1	calculated centroid data, transformed into the U axis of the inertial reference frame
2481	trc_centroid_table	centr_6_irf_axis_v	FLOAT8	N/A	%f	NUMBER	-1	1	calculated centroid data, transformed into the V axis of the inertial reference frame
2482	trc_centroid_table	centr_6_irf_axis_w	FLOAT8	N/A	%f	NUMBER	-1	1	calculated centroid data, transformed into the W axis of the inertial reference frame
2483	trc_centroid_table	centr_6_tarf_axis_u	FLOAT8	N/A	%f	NUMBER	-1	1	calculated centroid data, transformed into the U axis of the TA reference frame
2484	trc_centroid_table	centr_6_tarf_axis_v	FLOAT8	N/A	%f	NUMBER	-1	1	calculated centroid data, transformed into the V axis of the TA reference frame
2485	trc_centroid_table	centr_6_tarf_axis_w	FLOAT8	N/A	%f	NUMBER	-1	1	calculated centroid data, transformed into the W axis of the TA reference frame
2486	trc_centroid_table	centr_6_pixel_format	INT4	N/A	%d	ENUM	0	1	pixel format of image used for centroid calculation(0: 8_BIT), (1: 14_BIT),
2487	trc_centroid_table	centr_6_pixel_group	INT4	N/A	%d	ENUM	0	2	pixel grouping of image used for centroid calculation(0: 1x1), (1: 2x2), (2: 4x4),
2488	trc_centroid_table	centr_6_quality	FLOAT4	N/A	%f	NUMBER	0	1	quality estimate of centroid calculation
2489	trc_centroid_table	centr_6_darkval	FLOAT4	N/A	%f	NUMBER	0	16383	dark value, median filtered minimum pixel intensity in the AOI
2490	trc_centroid_table	centr_6_th_intens	FLOAT4	N/A	%f	NUMBER	0	16383	threshold intensity, minimum pixel intensity used for centroid or limb calculation
2491	trc_centroid_table	centr_6_aoi_maxval	FLOAT4	N/A	%f	NUMBER	0	16383	max. value, maximum pixel intensity in the AOI
2492	trc_centroid_table	centr_6_height	FLOAT4	N/A	%f	NUMBER	0	16383	estimation of the intensity of the centroid by calculating the mean value of pixels weighted with the CentroidWindow matrix values (CentroidWindow is a 5x5 matrix with values set by configuration command trc_config)
2493	trc_centroid_table	centr_6_usedpix	UINT4	pixels	%u	NUMBER	0	22500	number of pixels in the AOI used for the centroid or limb calculation
2494	trc_centroid_table	centr_6_intens	FLOAT4	N/A	%f	NUMBER	0	16383	centroid intensity, intensity at centroid position
2495	trc_centroid_table	centr_7_state	UINT4	N/A	%u	ENUM	0	1	indicates whether centroid calculation is on/off within this AOI(0: OFF), (1: ON),
2496	trc_centroid_table	centr_7_camera_id	UINT4	N/A	%u	ENUM	0	2	specifies the camera which is related to the centroid data for this AOI(0: WFI), (1: FFI), (2: FPI),
2497	trc_centroid_table	centr_7_aoi_snr	UINT4	N/A	%u	NUMBER	0	999	serial number of the AOI to which the centroid data applies
2498	trc_centroid_table	centr_7_aoi_fov	UINT4	N/A	%u	ENUM	0	2	reports the position of the AOI relative to the imager FOV(0: ON_FOV), (1: PART_FOV), (2: OFF_FOV),
2499	trc_centroid_table	centr_7_image_snr	INT4	N/A	%d	NUMBER	10000	39999	specifies the image which is related to the centroid data for this AOI
2500	trc_centroid_table	centr_7_ts_exp_cent_time	TIME8	seconds	%d.%09d	NUMBER	0	2147483647	timestamp referring to center of image exposure
2501	trc_centroid_table	centr_7_state_move_exp	UINT4	N/A	%u	ENUM	0	3	reports move status of telescope during image exposure(0: LOCKED), (1: SETTLED), (2: TRANSIENT), (3: NOT_READY),
2502	trc_centroid_table	centr_7_state_tsc_exp	UINT4	N/A	%u	ENUM	0	6	reports TASCU status during image exposure(0: ACTIVE), (1: MOTION_PROG_TRACK), (2: MOTION_SLEW), (3: MOTION_POS_REL), (4: MOTION_POS_ABS), (5: NOT_READY), (6: TSC_DATA_MISSING),
2503	trc_centroid_table	centr_7_pix_row	FLOAT4	N/A	%f	NUMBER	0	1023	calculated centroid data in row coordinate of the raw pixel image
2504	trc_centroid_table	centr_7_pix_col	FLOAT4	N/A	%f	NUMBER	0	1023	calculated centroid data in column coordinate of the raw pixel image

	A	B	C	D	E	F	G	H	I
2505	trc_centroid_table	centr_7_crf_axis_u	FLOAT8	N/A	%f	NUMBER	-1	1	calculated centroid data, transformed into the U axis of the respective camera reference frame
2506	trc_centroid_table	centr_7_crf_axis_v	FLOAT8	N/A	%f	NUMBER	-1	1	calculated centroid data, transformed into the V axis of the respective camera reference frame
2507	trc_centroid_table	centr_7_crf_axis_w	FLOAT8	N/A	%f	NUMBER	-1	1	calculated centroid data, transformed into the W axis of the respective camera reference frame
2508	trc_centroid_table	centr_7_irf_axis_u	FLOAT8	N/A	%f	NUMBER	-1	1	calculated centroid data, transformed into the U axis of the inertial reference frame
2509	trc_centroid_table	centr_7_irf_axis_v	FLOAT8	N/A	%f	NUMBER	-1	1	calculated centroid data, transformed into the V axis of the inertial reference frame
2510	trc_centroid_table	centr_7_irf_axis_w	FLOAT8	N/A	%f	NUMBER	-1	1	calculated centroid data, transformed into the W axis of the inertial reference frame
2511	trc_centroid_table	centr_7_tarf_axis_u	FLOAT8	N/A	%f	NUMBER	-1	1	calculated centroid data, transformed into the U axis of the TA reference frame
2512	trc_centroid_table	centr_7_tarf_axis_v	FLOAT8	N/A	%f	NUMBER	-1	1	calculated centroid data, transformed into the V axis of the TA reference frame
2513	trc_centroid_table	centr_7_tarf_axis_w	FLOAT8	N/A	%f	NUMBER	-1	1	calculated centroid data, transformed into the W axis of the TA reference frame
2514	trc_centroid_table	centr_7_pixel_format	INT4	N/A	%d	ENUM	0	1	pixel format of image used for centroid calculation(0: 8_BIT), (1: 14_BIT),
2515	trc_centroid_table	centr_7_pixel_group	INT4	N/A	%d	ENUM	0	2	pixel grouping of image used for centroid calculation(0: 1x1), (1: 2x2), (2: 4x4),
2516	trc_centroid_table	centr_7_quality	FLOAT4	N/A	%f	NUMBER	0	1	quality estimate of centroid calculation
2517	trc_centroid_table	centr_7_darkval	FLOAT4	N/A	%f	NUMBER	0	16383	dark value, median filtered minimum pixel intensity in the AOI
2518	trc_centroid_table	centr_7_th_intens	FLOAT4	N/A	%f	NUMBER	0	16383	threshold intensity, minimum pixel intensity used for centroid or limb calculation
2519	trc_centroid_table	centr_7_aoi_maxval	FLOAT4	N/A	%f	NUMBER	0	16383	max. value, maximum pixel intensity in the AOI
2520	trc_centroid_table	centr_7_height	FLOAT4	N/A	%f	NUMBER	0	16383	estimation of the intensity of the centroid by calculating the mean value of pixels weighted with the CentroidWindow matrix values (CentroidWindow is a 5x5 matrix with values set by configuration command trc_config)
2521	trc_centroid_table	centr_7_usedpix	UINT4	pixels	%u	NUMBER	0	22500	number of pixels in the AOI used for the centroid or limb calculation
2522	trc_centroid_table	centr_7_intens	FLOAT4	N/A	%f	NUMBER	0	16383	centroid intensity, intensity at centroid position
2523	trc_centroid_table	centr_8_state	UINT4	N/A	%u	ENUM	0	1	indicates whether centroid calculation is on/off within this AOI(0: OFF), (1: ON),
2524	trc_centroid_table	centr_8_camera_id	UINT4	N/A	%u	ENUM	0	2	specifies the camera which is related to the centroid data for this AOI(0: WFI), (1: FFI), (2: FPI),
2525	trc_centroid_table	centr_8_aoi_snr	UINT4	N/A	%u	NUMBER	0	999	serial number of the AOI to which the centroid data applies
2526	trc_centroid_table	centr_8_aoi_fov	UINT4	N/A	%u	ENUM	0	2	reports the position of the AOI relative to the imager FOV(0: ON_FOV), (1: PART_FOV), (2: OFF_FOV),
2527	trc_centroid_table	centr_8_image_snr	INT4	N/A	%d	NUMBER	10000	39999	specifies the image which is related to the centroid data for this AOI
2528	trc_centroid_table	centr_8_ts_exp_cent_time	TIME8	seconds	%d.%09d	NUMBER	0	2147483647	timestamp referring to center of image exposure
2529	trc_centroid_table	centr_8_state_move_exp	UINT4	N/A	%u	ENUM	0	3	reports move status of telescope during image exposure(0: LOCKED), (1: SETTLED), (2: TRANSIENT), (3: NOT_READY),

	A	B	C	D	E	F	G	H	I
2530	trc_centroid_table	centr_8_state_tsc_exp	UINT4	N/A	%u	ENUM	0	6	reports TASCU status during image exposure(0: ACTIVE), (1: MOTION_PROG_TRACK), (2: MOTION_SLEW), (3: MOTION_POS_REL), (4: MOTION_POS_ABS), (5: NOT_READY), (6: TSC_DATA_MISSING),
2531	trc_centroid_table	centr_8_pix_row	FLOAT4	N/A	%f	NUMBER	0	1023	calculated centroid data in row coordinate of the raw pixel image
2532	trc_centroid_table	centr_8_pix_col	FLOAT4	N/A	%f	NUMBER	0	1023	calculated centroid data in column coordinate of the raw pixel image
2533	trc_centroid_table	centr_8_crf_axis_u	FLOAT8	N/A	%f	NUMBER	-1	1	calculated centroid data, transformed into the U axis of the respective camera reference frame
2534	trc_centroid_table	centr_8_crf_axis_v	FLOAT8	N/A	%f	NUMBER	-1	1	calculated centroid data, transformed into the V axis of the respective camera reference frame
2535	trc_centroid_table	centr_8_crf_axis_w	FLOAT8	N/A	%f	NUMBER	-1	1	calculated centroid data, transformed into the W axis of the respective camera reference frame
2536	trc_centroid_table	centr_8_irf_axis_u	FLOAT8	N/A	%f	NUMBER	-1	1	calculated centroid data, transformed into the U axis of the inertial reference frame
2537	trc_centroid_table	centr_8_irf_axis_v	FLOAT8	N/A	%f	NUMBER	-1	1	calculated centroid data, transformed into the V axis of the inertial reference frame
2538	trc_centroid_table	centr_8_irf_axis_w	FLOAT8	N/A	%f	NUMBER	-1	1	calculated centroid data, transformed into the W axis of the inertial reference frame
2539	trc_centroid_table	centr_8_tarf_axis_u	FLOAT8	N/A	%f	NUMBER	-1	1	calculated centroid data, transformed into the U axis of the TA reference frame
2540	trc_centroid_table	centr_8_tarf_axis_v	FLOAT8	N/A	%f	NUMBER	-1	1	calculated centroid data, transformed into the V axis of the TA reference frame
2541	trc_centroid_table	centr_8_tarf_axis_w	FLOAT8	N/A	%f	NUMBER	-1	1	calculated centroid data, transformed into the W axis of the TA reference frame
2542	trc_centroid_table	centr_8_pixel_format	INT4	N/A	%d	ENUM	0	1	pixel format of image used for centroid calculation(0: 8_BIT), (1: 14_BIT),
2543	trc_centroid_table	centr_8_pixel_group	INT4	N/A	%d	ENUM	0	2	pixel grouping of image used for centroid calculation(0: 1x1), (1: 2x2), (2: 4x4),
2544	trc_centroid_table	centr_8_quality	FLOAT4	N/A	%f	NUMBER	0	1	quality estimate of centroid calculation
2545	trc_centroid_table	centr_8_darkval	FLOAT4	N/A	%f	NUMBER	0	16383	dark value, median filtered minimum pixel intensity in the AOI
2546	trc_centroid_table	centr_8_th_intens	FLOAT4	N/A	%f	NUMBER	0	16383	threshold intensity, minimum pixel intensity used for centroid or limb calculation
2547	trc_centroid_table	centr_8_aoi_maxval	FLOAT4	N/A	%f	NUMBER	0	16383	max. value, maximum pixel intensity in the AOI
2548	trc_centroid_table	centr_8_height	FLOAT4	N/A	%f	NUMBER	0	16383	estimation of the intensity of the centroid by calculating the mean value of pixels weighted with the CentroidWindow matrix values (CentroidWindow is a 5x5 matrix with values set by configuration command trc_config)
2549	trc_centroid_table	centr_8_usedpix	UINT4	pixels	%u	NUMBER	0	22500	number of pixels in the AOI used for the centroid or limb calculation
2550	trc_centroid_table	centr_8_intens	FLOAT4	N/A	%f	NUMBER	0	16383	centroid intensity, intensity at centroid position
2551	trc_limb_table								tracker AOI limb table data
2552	trc_limb_table	packet	BINARY	N/A	%s	NUMBER			data packet as it was received from the TA
2553	trc_limb_table	pkt_timestamp	TIME8	seconds	%d.%09d	NUMBER	0	2147483647	time data packet was constructed by TA
2554	trc_limb_table	timestamp	TIME8	seconds	%d.%09d	NUMBER	0	2147483647	time at which the event happened or was captured
2555	trc_limb_table	table_id	UINT4	N/A	%u	NUMBER	0	4294967295	ID of the current table

	A	B	C	D	E	F	G	H	I
2556	trc_limb_table	limb_1_state	UINT4	N/A	%u	ENUM	0	1	reports whether limb calculation is on/off within this AOI(0: OFF), (1: ON),
2557	trc_limb_table	limb_1_camera_id	UINT4	N/A	%u	ENUM	0	2	specifies the camera which is related to the limb data for this AOI(0: WFI), (1: FFI), (2: FPI),
2558	trc_limb_table	limb_1_aoi_snr	UINT4	N/A	%u	NUMBER	0	999	serial number of the AOI to which the limb data applies
2559	trc_limb_table	limb_1_aoi_fov	UINT4	N/A	%u	ENUM	0	2	reports the position of the AOI relative to the imager FOV(0: ON_FOV), (1: PART_FOV), (2: OFF_FOV),
2560	trc_limb_table	limb_1_image_snr	INT4	N/A	%d	NUMBER	10000	39999	specifies the image which is related to the limb data for this AOI
2561	trc_limb_table	limb_1_ts_exp_cent_tv	TIME8	seconds	%d.%09d	NUMBER	0	2147483647	timestamp referring to center of image exposure
2562	trc_limb_table	limb_1_state_move_exp	UINT4	N/A	%u	ENUM	0	3	reports move status of telescope during image exposure(0: LOCKED), (1: SETTLED), (2: TRANSIENT), (3: NOT_READY),
2563	trc_limb_table	limb_1_state_tsc_exp	UINT4	N/A	%u	ENUM	0	6	reports TASCU status during image exposure(0: ACTIVE), (1: MOTION_PROG_TRACK), (2: MOTION_SLEW), (3: MOTION_POS_REL), (4: MOTION_POS_ABS), (5: NOT_READY), (6: TSC_DATA_MISSING),
2564	trc_limb_table	limb_1_pix_base_pc_a	FLOAT4	N/A	%f	NUMBER	TBD	TBD	describes parabolic shape for limb fitting in coordinates of the raw pixel image
2565	trc_limb_table	limb_1_pix_base_pc_b	FLOAT4	N/A	%f	NUMBER	TBD	TBD	describes parabolic shape for limb fitting in coordinates of the raw pixel image
2566	trc_limb_table	limb_1_pix_base_pc_c	FLOAT4	N/A	%f	NUMBER	TBD	TBD	describes parabolic shape for limb fitting in coordinates of the raw pixel image
2567	trc_limb_table	limb_1_pix_base_type	UINT4	N/A	%u	ENUM	0	1	describes parabolic shape for limb fitting in coordinates of the raw pixel image(0: U=F(V)), (1: V=F(U)),
2568	trc_limb_table	limb_1_pix_base_start_u	FLOAT4	N/A	%f	NUMBER	TBD	TBD	describes parabolic shape for limb fitting in coordinates of the raw pixel image
2569	trc_limb_table	limb_1_pix_base_start_v	FLOAT4	N/A	%f	NUMBER	TBD	TBD	describes parabolic shape for limb fitting in coordinates of the raw pixel image
2570	trc_limb_table	limb_1_pix_base_stop_u	FLOAT4	N/A	%f	NUMBER	TBD	TBD	describes parabolic shape for limb fitting in coordinates of the raw pixel image
2571	trc_limb_table	limb_1_pix_base_stop_v	FLOAT4	N/A	%f	NUMBER	TBD	TBD	describes parabolic shape for limb fitting in coordinates of the raw pixel image
2572	trc_limb_table	limb_1_pix_base_lc_num	INT4	N/A	%d	NUMBER	TBD	TBD	describes parabolic shape for limb fitting in coordinates of the raw pixel image
2573	trc_limb_table	limb_1_crf_pc_a	FLOAT4	N/A	%f	NUMBER	TBD	TBD	describes parabolic shape for limb fitting in coordinates of the camera reference frame
2574	trc_limb_table	limb_1_crf_pc_b	FLOAT4	N/A	%f	NUMBER	TBD	TBD	describes parabolic shape for limb fitting in coordinates of the camera reference frame
2575	trc_limb_table	limb_1_crf_pc_c	FLOAT4	N/A	%f	NUMBER	TBD	TBD	describes parabolic shape for limb fitting in coordinates of the camera reference frame
2576	trc_limb_table	limb_1_crf_type	UINT4	N/A	%u	ENUM	0	1	describes parabolic shape for limb fitting in coordinates of the camera reference frame(0: U=F(V)), (1: V=F(U)),
2577	trc_limb_table	limb_1_crf_start_u	FLOAT4	N/A	%f	NUMBER	TBD	TBD	describes parabolic shape for limb fitting in coordinates of the camera reference frame
2578	trc_limb_table	limb_1_crf_start_v	FLOAT4	N/A	%f	NUMBER	TBD	TBD	describes parabolic shape for limb fitting in coordinates of the camera reference frame
2579	trc_limb_table	limb_1_crf_stop_u	FLOAT4	N/A	%f	NUMBER	TBD	TBD	describes parabolic shape for limb fitting in coordinates of the camera reference frame
2580	trc_limb_table	limb_1_crf_stop_v	FLOAT4	N/A	%f	NUMBER	TBD	TBD	describes parabolic shape for limb fitting in coordinates of the camera reference frame

	A	B	C	D	E	F	G	H	I
2581	trc_limb_table	limb_1_crf_lc_num	INT4	N/A	%d	NUMBER	TBD	TBD	describes parabolic shape for limb fitting in coordinates of the camera reference frame
2582	trc_limb_table	limb_1_tarf_base_pc_a	FLOAT4	N/A	%f	NUMBER	TBD	TBD	describes parabolic shape for limb fitting in coordinates of TARF
2583	trc_limb_table	limb_1_tarf_base_pc_b	FLOAT4	N/A	%f	NUMBER	TBD	TBD	describes parabolic shape for limb fitting in coordinates of TARF
2584	trc_limb_table	limb_1_tarf_base_pc_c	FLOAT4	N/A	%f	NUMBER	TBD	TBD	describes parabolic shape for limb fitting in coordinates of TARF
2585	trc_limb_table	limb_1_tarf_base_type	UINT4	N/A	%u	ENUM	0	1	describes parabolic shape for limb fitting in coordinates of TARF(0: U=F(V)), (1: V=F(U)),
2586	trc_limb_table	limb_1_tarf_base_start_u	FLOAT4	N/A	%f	NUMBER	TBD	TBD	describes parabolic shape for limb fitting in coordinates of TARF
2587	trc_limb_table	limb_1_tarf_base_start_v	FLOAT4	N/A	%f	NUMBER	TBD	TBD	describes parabolic shape for limb fitting in coordinates of TARF
2588	trc_limb_table	limb_1_tarf_base_stop_u	FLOAT4	N/A	%f	NUMBER	TBD	TBD	describes parabolic shape for limb fitting in coordinates of TARF
2589	trc_limb_table	limb_1_tarf_base_stop_v	FLOAT4	N/A	%f	NUMBER	TBD	TBD	describes parabolic shape for limb fitting in coordinates of TARF
2590	trc_limb_table	limb_1_tarf_base_lc_num	INT4	N/A	%d	NUMBER	TBD	TBD	describes parabolic shape for limb fitting in coordinates of TARF
2591	trc_limb_table	limb_1_tarf_pc_d	FLOAT4	N/A	%f	NUMBER	TBD	TBD	describes parabolic shape for limb fitting in coordinates of TARF
2592	trc_limb_table	limb_1_tarf_pc_e	FLOAT4	N/A	%f	NUMBER	TBD	TBD	describes parabolic shape for limb fitting in coordinates of TARF
2593	trc_limb_table	limb_1_pos_tarf_status	INT4	N/A	%d	ENUM	0	1	current status of reported fixed position in TARF(0: NOT_VALID), (1: VALID),
2594	trc_limb_table	limb_1_pos_tarf_axis_u	FLOAT8	N/A	%f	NUMBER	-1	1	fixed U axis position in TARF, used for AOI positioning (during limb tracking)
2595	trc_limb_table	limb_1_pos_tarf_axis_v	FLOAT8	N/A	%f	NUMBER	-1	1	fixed V axis position in TARF, used for AOI positioning (during limb tracking)
2596	trc_limb_table	limb_1_pos_tarf_axis_w	FLOAT8	N/A	%f	NUMBER	-1	1	fixed W axis position in TARF, used for AOI positioning (during limb tracking)
2597	trc_limb_table	limb_1_pixel_format	INT4	N/A	%d	ENUM	0	1	pixel format of image used for limb calculation(0: 8_BIT), (1: 14_BIT),
2598	trc_limb_table	limb_1_pixel_group	INT4	N/A	%d	ENUM	0	2	pixel grouping of image used for limb calculation(0: 1x1), (1: 2x2), (2: 4x4),
2599	trc_limb_table	limb_1_quality	FLOAT4	N/A	%f	NUMBER	0	1	quality estimate of limb calculation
2600	trc_limb_table	limb_2_state	UINT4	N/A	%u	ENUM	0	1	reports whether limb calculation is on/off within this AOI(0: OFF), (1: ON),
2601	trc_limb_table	limb_2_camera_id	UINT4	N/A	%u	ENUM	0	2	specifies the camera which is related to the limb data for this AOI(0: WFI), (1: FFI), (2: FPI),
2602	trc_limb_table	limb_2_aoi_snr	UINT4	N/A	%u	NUMBER	0	999	serial number of the AOI to which the limb data applies
2603	trc_limb_table	limb_2_aoi_fov	UINT4	N/A	%u	ENUM	0	2	reports the position of the AOI relative to the imager FOV(0: ON_FOV), (1: PART_FOV), (2: OFF_FOV),
2604	trc_limb_table	limb_2_image_snr	INT4	N/A	%d	NUMBER	10000	39999	specifies the image which is related to the limb data for this AOI
2605	trc_limb_table	limb_2_ts_exp_cent_tv	TIME8	seconds	%d.%09d	NUMBER	0	2147483647	timestamp referring to center of image exposure
2606	trc_limb_table	limb_2_state_move_exp	UINT4	N/A	%u	ENUM	0	3	reports move status of telescope during image exposure(0: LOCKED), (1: SETTLED), (2: TRANSIENT), (3: NOT_READY),
2607	trc_limb_table	limb_2_state_tsc_exp	UINT4	N/A	%u	ENUM	0	6	reports TASCU status during image exposure(0: ACTIVE), (1: MOTION_PROG_TRACK), (2: MOTION_SLEW), (3: MOTION_POS_REL), (4: MOTION_POS_ABS), (5: NOT_READY), (6: TSC_DATA_MISSING),
2608	trc_limb_table	limb_2_pix_base_pc_a	FLOAT4	N/A	%f	NUMBER	TBD	TBD	describes parabolic shape for limb fitting in coordinates of the raw pixel image
2609	trc_limb_table	limb_2_pix_base_pc_b	FLOAT4	N/A	%f	NUMBER	TBD	TBD	describes parabolic shape for limb fitting in coordinates of the raw pixel image

	A	B	C	D	E	F	G	H	I
2610	trc_limb_table	limb_2_pix_base_pc_c	FLOAT4	N/A	%f	NUMBER	TBD	TBD	describes parabolic shape for limb fitting in coordinates of the raw pixel image
2611	trc_limb_table	limb_2_pix_base_type	UINT4	N/A	%u	ENUM	0	1	describes parabolic shape for limb fitting in coordinates of the raw pixel image(0: U=F(V)), (1: V=F(U)),
2612	trc_limb_table	limb_2_pix_base_start_u	FLOAT4	N/A	%f	NUMBER	TBD	TBD	describes parabolic shape for limb fitting in coordinates of the raw pixel image
2613	trc_limb_table	limb_2_pix_base_start_v	FLOAT4	N/A	%f	NUMBER	TBD	TBD	describes parabolic shape for limb fitting in coordinates of the raw pixel image
2614	trc_limb_table	limb_2_pix_base_stop_u	FLOAT4	N/A	%f	NUMBER	TBD	TBD	describes parabolic shape for limb fitting in coordinates of the raw pixel image
2615	trc_limb_table	limb_2_pix_base_stop_v	FLOAT4	N/A	%f	NUMBER	TBD	TBD	describes parabolic shape for limb fitting in coordinates of the raw pixel image
2616	trc_limb_table	limb_2_pix_base_lc_num	INT4	N/A	%d	NUMBER	TBD	TBD	describes parabolic shape for limb fitting in coordinates of the raw pixel image
2617	trc_limb_table	limb_2_crf_pc_a	FLOAT4	N/A	%f	NUMBER	TBD	TBD	describes parabolic shape for limb fitting in coordinates of the camera reference frame
2618	trc_limb_table	limb_2_crf_pc_b	FLOAT4	N/A	%f	NUMBER	TBD	TBD	describes parabolic shape for limb fitting in coordinates of the camera reference frame
2619	trc_limb_table	limb_2_crf_pc_c	FLOAT4	N/A	%f	NUMBER	TBD	TBD	describes parabolic shape for limb fitting in coordinates of the camera reference frame
2620	trc_limb_table	limb_2_crf_type	UINT4	N/A	%u	ENUM	0	1	describes parabolic shape for limb fitting in coordinates of the camera reference frame(0: U=F(V)), (1: V=F(U)),
2621	trc_limb_table	limb_2_crf_start_u	FLOAT4	N/A	%f	NUMBER	TBD	TBD	describes parabolic shape for limb fitting in coordinates of the camera reference frame
2622	trc_limb_table	limb_2_crf_start_v	FLOAT4	N/A	%f	NUMBER	TBD	TBD	describes parabolic shape for limb fitting in coordinates of the camera reference frame
2623	trc_limb_table	limb_2_crf_stop_u	FLOAT4	N/A	%f	NUMBER	TBD	TBD	describes parabolic shape for limb fitting in coordinates of the camera reference frame
2624	trc_limb_table	limb_2_crf_stop_v	FLOAT4	N/A	%f	NUMBER	TBD	TBD	describes parabolic shape for limb fitting in coordinates of the camera reference frame
2625	trc_limb_table	limb_2_crf_lc_num	INT4	N/A	%d	NUMBER	TBD	TBD	describes parabolic shape for limb fitting in coordinates of the camera reference frame
2626	trc_limb_table	limb_2_tarf_base_pc_a	FLOAT4	N/A	%f	NUMBER	TBD	TBD	describes parabolic shape for limb fitting in coordinates of TARF
2627	trc_limb_table	limb_2_tarf_base_pc_b	FLOAT4	N/A	%f	NUMBER	TBD	TBD	describes parabolic shape for limb fitting in coordinates of TARF
2628	trc_limb_table	limb_2_tarf_base_pc_c	FLOAT4	N/A	%f	NUMBER	TBD	TBD	describes parabolic shape for limb fitting in coordinates of TARF
2629	trc_limb_table	limb_2_tarf_base_type	UINT4	N/A	%u	ENUM	0	1	describes parabolic shape for limb fitting in coordinates of TARF(0: U=F(V)), (1: V=F(U)),
2630	trc_limb_table	limb_2_tarf_base_start_u	FLOAT4	N/A	%f	NUMBER	TBD	TBD	describes parabolic shape for limb fitting in coordinates of TARF
2631	trc_limb_table	limb_2_tarf_base_start_v	FLOAT4	N/A	%f	NUMBER	TBD	TBD	describes parabolic shape for limb fitting in coordinates of TARF
2632	trc_limb_table	limb_2_tarf_base_stop_u	FLOAT4	N/A	%f	NUMBER	TBD	TBD	describes parabolic shape for limb fitting in coordinates of TARF
2633	trc_limb_table	limb_2_tarf_base_stop_v	FLOAT4	N/A	%f	NUMBER	TBD	TBD	describes parabolic shape for limb fitting in coordinates of TARF
2634	trc_limb_table	limb_2_tarf_base_lc_num	INT4	N/A	%d	NUMBER	TBD	TBD	describes parabolic shape for limb fitting in coordinates of TARF
2635	trc_limb_table	limb_2_tarf_pc_d	FLOAT4	N/A	%f	NUMBER	TBD	TBD	describes parabolic shape for limb fitting in coordinates of TARF
2636	trc_limb_table	limb_2_tarf_pc_e	FLOAT4	N/A	%f	NUMBER	TBD	TBD	describes parabolic shape for limb fitting in coordinates of TARF
2637	trc_limb_table	limb_2_pos_tarf_status	INT4	N/A	%d	ENUM	0	1	current status of reported fixed position in TARF(0: NOT_VALID), (1: VALID),
2638	trc_limb_table	limb_2_pos_tarf_axis_u	FLOAT8	N/A	%f	NUMBER	-1	1	fixed U axis position in TARF, used for AOI positioning (during limb tracking)

	A	B	C	D	E	F	G	H	I
2639	trc_limb_table	limb_2_pos_tarf_axis_v	FLOAT8	N/A	%f	NUMBER	-1	1	fixed V axis position in TARF, used for AOI positioning (during limb tracking)
2640	trc_limb_table	limb_2_pos_tarf_axis_w	FLOAT8	N/A	%f	NUMBER	-1	1	fixed W axis position in TARF, used for AOI positioning (during limb tracking)
2641	trc_limb_table	limb_2_pixel_format	INT4	N/A	%d	ENUM	0	1	pixel format of image used for limb calculation(0: 8_BIT), (1: 14_BIT),
2642	trc_limb_table	limb_2_pixel_group	INT4	N/A	%d	ENUM	0	2	pixel grouping of image used for limb calculation(0: 1x1), (1: 2x2), (2: 4x4),
2643	trc_limb_table	limb_2_quality	FLOAT4	N/A	%f	NUMBER	0	1	quality estimate of limb calculation
2644	trc_limb_table	limb_3_state	UINT4	N/A	%u	ENUM	0	1	reports whether limb calculation is on/off within this AOI(0: OFF), (1: ON),
2645	trc_limb_table	limb_3_camera_id	UINT4	N/A	%u	ENUM	0	2	specifies the camera which is related to the limb data for this AOI(0: WFI), (1: FFI), (2: FPI),
2646	trc_limb_table	limb_3_aoi_snr	UINT4	N/A	%u	NUMBER	0	999	serial number of the AOI to which the limb data applies
2647	trc_limb_table	limb_3_aoi_fov	UINT4	N/A	%u	ENUM	0	2	reports the position of the AOI relative to the imager FOV(0: ON_FOV), (1: PART_FOV), (2: OFF_FOV),
2648	trc_limb_table	limb_3_image_snr	INT4	N/A	%d	NUMBER	10000	39999	specifies the image which is related to the limb data for this AOI
2649	trc_limb_table	limb_3_ts_exp_cent_tv	TIME8	seconds	%d.%09d	NUMBER	0	2147483647	timestamp referring to center of image exposure
2650	trc_limb_table	limb_3_state_move_exp	UINT4	N/A	%u	ENUM	0	3	reports move status of telescope during image exposure(0: LOCKED), (1: SETTLED), (2: TRANSIENT), (3: NOT_READY),
2651	trc_limb_table	limb_3_state_tsc_exp	UINT4	N/A	%u	ENUM	0	6	reports TASCU status during image exposure(0: ACTIVE), (1: MOTION_PROG_TRACK), (2: MOTION_SLEW), (3: MOTION_POS_REL), (4: MOTION_POS_ABS), (5: NOT_READY), (6: TSC_DATA_MISSING),
2652	trc_limb_table	limb_3_pix_base_pc_a	FLOAT4	N/A	%f	NUMBER	TBD	TBD	describes parabolic shape for limb fitting in coordinates of the raw pixel image
2653	trc_limb_table	limb_3_pix_base_pc_b	FLOAT4	N/A	%f	NUMBER	TBD	TBD	describes parabolic shape for limb fitting in coordinates of the raw pixel image
2654	trc_limb_table	limb_3_pix_base_pc_c	FLOAT4	N/A	%f	NUMBER	TBD	TBD	describes parabolic shape for limb fitting in coordinates of the raw pixel image
2655	trc_limb_table	limb_3_pix_base_type	UINT4	N/A	%u	ENUM	0	1	describes parabolic shape for limb fitting in coordinates of the raw pixel image(0: U=F(V)), (1: V=F(U)),
2656	trc_limb_table	limb_3_pix_base_start_u	FLOAT4	N/A	%f	NUMBER	TBD	TBD	describes parabolic shape for limb fitting in coordinates of the raw pixel image
2657	trc_limb_table	limb_3_pix_base_start_v	FLOAT4	N/A	%f	NUMBER	TBD	TBD	describes parabolic shape for limb fitting in coordinates of the raw pixel image
2658	trc_limb_table	limb_3_pix_base_stop_u	FLOAT4	N/A	%f	NUMBER	TBD	TBD	describes parabolic shape for limb fitting in coordinates of the raw pixel image
2659	trc_limb_table	limb_3_pix_base_stop_v	FLOAT4	N/A	%f	NUMBER	TBD	TBD	describes parabolic shape for limb fitting in coordinates of the raw pixel image
2660	trc_limb_table	limb_3_pix_base_lc_num	INT4	N/A	%d	NUMBER	TBD	TBD	describes parabolic shape for limb fitting in coordinates of the raw pixel image
2661	trc_limb_table	limb_3_crf_pc_a	FLOAT4	N/A	%f	NUMBER	TBD	TBD	describes parabolic shape for limb fitting in coordinates of the camera reference frame
2662	trc_limb_table	limb_3_crf_pc_b	FLOAT4	N/A	%f	NUMBER	TBD	TBD	describes parabolic shape for limb fitting in coordinates of the camera reference frame
2663	trc_limb_table	limb_3_crf_pc_c	FLOAT4	N/A	%f	NUMBER	TBD	TBD	describes parabolic shape for limb fitting in coordinates of the camera reference frame

	A	B	C	D	E	F	G	H	I
2664	trc_limb_table	limb_3_crf_type	UINT4	N/A	%u	ENUM	0	1	describes parabolic shape for limb fitting in coordinates of the camera reference frame(0: U=F(V)), (1: V=F(U)),
2665	trc_limb_table	limb_3_crf_start_u	FLOAT4	N/A	%f	NUMBER	TBD	TBD	describes parabolic shape for limb fitting in coordinates of the camera reference frame
2666	trc_limb_table	limb_3_crf_start_v	FLOAT4	N/A	%f	NUMBER	TBD	TBD	describes parabolic shape for limb fitting in coordinates of the camera reference frame
2667	trc_limb_table	limb_3_crf_stop_u	FLOAT4	N/A	%f	NUMBER	TBD	TBD	describes parabolic shape for limb fitting in coordinates of the camera reference frame
2668	trc_limb_table	limb_3_crf_stop_v	FLOAT4	N/A	%f	NUMBER	TBD	TBD	describes parabolic shape for limb fitting in coordinates of the camera reference frame
2669	trc_limb_table	limb_3_crf_lc_num	INT4	N/A	%d	NUMBER	TBD	TBD	describes parabolic shape for limb fitting in coordinates of the camera reference frame
2670	trc_limb_table	limb_3_tarf_base_pc_a	FLOAT4	N/A	%f	NUMBER	TBD	TBD	describes parabolic shape for limb fitting in coordinates of TARF
2671	trc_limb_table	limb_3_tarf_base_pc_b	FLOAT4	N/A	%f	NUMBER	TBD	TBD	describes parabolic shape for limb fitting in coordinates of TARF
2672	trc_limb_table	limb_3_tarf_base_pc_c	FLOAT4	N/A	%f	NUMBER	TBD	TBD	describes parabolic shape for limb fitting in coordinates of TARF
2673	trc_limb_table	limb_3_tarf_base_type	UINT4	N/A	%u	ENUM	0	1	describes parabolic shape for limb fitting in coordinates of TARF(0: U=F(V)), (1: V=F(U)),
2674	trc_limb_table	limb_3_tarf_base_start_u	FLOAT4	N/A	%f	NUMBER	TBD	TBD	describes parabolic shape for limb fitting in coordinates of TARF
2675	trc_limb_table	limb_3_tarf_base_start_v	FLOAT4	N/A	%f	NUMBER	TBD	TBD	describes parabolic shape for limb fitting in coordinates of TARF
2676	trc_limb_table	limb_3_tarf_base_stop_u	FLOAT4	N/A	%f	NUMBER	TBD	TBD	describes parabolic shape for limb fitting in coordinates of TARF
2677	trc_limb_table	limb_3_tarf_base_stop_v	FLOAT4	N/A	%f	NUMBER	TBD	TBD	describes parabolic shape for limb fitting in coordinates of TARF
2678	trc_limb_table	limb_3_tarf_base_lc_num	INT4	N/A	%d	NUMBER	TBD	TBD	describes parabolic shape for limb fitting in coordinates of TARF
2679	trc_limb_table	limb_3_tarf_pc_d	FLOAT4	N/A	%f	NUMBER	TBD	TBD	describes parabolic shape for limb fitting in coordinates of TARF
2680	trc_limb_table	limb_3_tarf_pc_e	FLOAT4	N/A	%f	NUMBER	TBD	TBD	describes parabolic shape for limb fitting in coordinates of TARF
2681	trc_limb_table	limb_3_pos_tarf_status	INT4	N/A	%d	ENUM	0	1	current status of reported fixed position in TARF(0: NOT_VALID), (1: VALID),
2682	trc_limb_table	limb_3_pos_tarf_axis_u	FLOAT8	N/A	%f	NUMBER	-1	1	fixed U axis position in TARF, used for AOI positioning (during limb tracking)
2683	trc_limb_table	limb_3_pos_tarf_axis_v	FLOAT8	N/A	%f	NUMBER	-1	1	fixed V axis position in TARF, used for AOI positioning (during limb tracking)
2684	trc_limb_table	limb_3_pos_tarf_axis_w	FLOAT8	N/A	%f	NUMBER	-1	1	fixed W axis position in TARF, used for AOI positioning (during limb tracking)
2685	trc_limb_table	limb_3_pixel_format	INT4	N/A	%d	ENUM	0	1	pixel format of image used for limb calculation(0: 8_BIT), (1: 14_BIT),
2686	trc_limb_table	limb_3_pixel_group	INT4	N/A	%d	ENUM	0	2	pixel grouping of image used for limb calculation(0: 1x1), (1: 2x2), (2: 4x4),
2687	trc_limb_table	limb_3_quality	FLOAT4	N/A	%f	NUMBER	0	1	quality estimate of limb calculation
2688	trc_limb_table	limb_4_state	UINT4	N/A	%u	ENUM	0	1	reports whether limb calculation is on/off within this AOI(0: OFF), (1: ON),
2689	trc_limb_table	limb_4_camera_id	UINT4	N/A	%u	ENUM	0	2	specifies the camera which is related to the limb data for this AOI(0: WFI), (1: FFI), (2: FPI),
2690	trc_limb_table	limb_4_aoi_snr	UINT4	N/A	%u	NUMBER	0	999	serial number of the AOI to which the limb data applies
2691	trc_limb_table	limb_4_aoi_fov	UINT4	N/A	%u	ENUM	0	2	reports the position of the AOI relative to the imager FOV(0: ON_FOV), (1: PART_FOV), (2: OFF_FOV),
2692	trc_limb_table	limb_4_image_snr	INT4	N/A	%d	NUMBER	10000	39999	specifies the image which is related to the limb data for this AOI
2693	trc_limb_table	limb_4_ts_exp_cent_tv	TIME8	seconds	%d.%09d	NUMBER	0	2147483647	timestamp referring to center of image exposure

	A	B	C	D	E	F	G	H	I
2694	trc_limb_table	limb_4_state_move_exp	UINT4	N/A	%u	ENUM	0	3	reports move status of telescope during image exposure(0: LOCKED), (1: SETTLED), (2: TRANSIENT), (3: NOT_READY),
2695	trc_limb_table	limb_4_state_tsc_exp	UINT4	N/A	%u	ENUM	0	6	reports TASCU status during image exposure(0: ACTIVE), (1: MOTION_PROG_TRACK), (2: MOTION_SLEW), (3: MOTION_POS_REL), (4: MOTION_POS_ABS), (5: NOT_READY), (6: TSC_DATA_MISSING),
2696	trc_limb_table	limb_4_pix_base_pc_a	FLOAT4	N/A	%f	NUMBER	TBD	TBD	describes parabolic shape for limb fitting in coordinates of the raw pixel image
2697	trc_limb_table	limb_4_pix_base_pc_b	FLOAT4	N/A	%f	NUMBER	TBD	TBD	describes parabolic shape for limb fitting in coordinates of the raw pixel image
2698	trc_limb_table	limb_4_pix_base_pc_c	FLOAT4	N/A	%f	NUMBER	TBD	TBD	describes parabolic shape for limb fitting in coordinates of the raw pixel image
2699	trc_limb_table	limb_4_pix_base_type	UINT4	N/A	%u	ENUM	0	1	describes parabolic shape for limb fitting in coordinates of the raw pixel image(0: U=F(V)), (1: V=F(U)),
2700	trc_limb_table	limb_4_pix_base_start_u	FLOAT4	N/A	%f	NUMBER	TBD	TBD	describes parabolic shape for limb fitting in coordinates of the raw pixel image
2701	trc_limb_table	limb_4_pix_base_start_v	FLOAT4	N/A	%f	NUMBER	TBD	TBD	describes parabolic shape for limb fitting in coordinates of the raw pixel image
2702	trc_limb_table	limb_4_pix_base_stop_u	FLOAT4	N/A	%f	NUMBER	TBD	TBD	describes parabolic shape for limb fitting in coordinates of the raw pixel image
2703	trc_limb_table	limb_4_pix_base_stop_v	FLOAT4	N/A	%f	NUMBER	TBD	TBD	describes parabolic shape for limb fitting in coordinates of the raw pixel image
2704	trc_limb_table	limb_4_pix_base_lc_num	INT4	N/A	%d	NUMBER	TBD	TBD	describes parabolic shape for limb fitting in coordinates of the raw pixel image
2705	trc_limb_table	limb_4_crf_pc_a	FLOAT4	N/A	%f	NUMBER	TBD	TBD	describes parabolic shape for limb fitting in coordinates of the camera reference frame
2706	trc_limb_table	limb_4_crf_pc_b	FLOAT4	N/A	%f	NUMBER	TBD	TBD	describes parabolic shape for limb fitting in coordinates of the camera reference frame
2707	trc_limb_table	limb_4_crf_pc_c	FLOAT4	N/A	%f	NUMBER	TBD	TBD	describes parabolic shape for limb fitting in coordinates of the camera reference frame
2708	trc_limb_table	limb_4_crf_type	UINT4	N/A	%u	ENUM	0	1	describes parabolic shape for limb fitting in coordinates of the camera reference frame(0: U=F(V)), (1: V=F(U)),
2709	trc_limb_table	limb_4_crf_start_u	FLOAT4	N/A	%f	NUMBER	TBD	TBD	describes parabolic shape for limb fitting in coordinates of the camera reference frame
2710	trc_limb_table	limb_4_crf_start_v	FLOAT4	N/A	%f	NUMBER	TBD	TBD	describes parabolic shape for limb fitting in coordinates of the camera reference frame
2711	trc_limb_table	limb_4_crf_stop_u	FLOAT4	N/A	%f	NUMBER	TBD	TBD	describes parabolic shape for limb fitting in coordinates of the camera reference frame
2712	trc_limb_table	limb_4_crf_stop_v	FLOAT4	N/A	%f	NUMBER	TBD	TBD	describes parabolic shape for limb fitting in coordinates of the camera reference frame
2713	trc_limb_table	limb_4_crf_lc_num	INT4	N/A	%d	NUMBER	TBD	TBD	describes parabolic shape for limb fitting in coordinates of the camera reference frame
2714	trc_limb_table	limb_4_tarf_base_pc_a	FLOAT4	N/A	%f	NUMBER	TBD	TBD	describes parabolic shape for limb fitting in coordinates of TARF
2715	trc_limb_table	limb_4_tarf_base_pc_b	FLOAT4	N/A	%f	NUMBER	TBD	TBD	describes parabolic shape for limb fitting in coordinates of TARF
2716	trc_limb_table	limb_4_tarf_base_pc_c	FLOAT4	N/A	%f	NUMBER	TBD	TBD	describes parabolic shape for limb fitting in coordinates of TARF
2717	trc_limb_table	limb_4_tarf_base_type	UINT4	N/A	%u	ENUM	0	1	describes parabolic shape for limb fitting in coordinates of TARF(0: U=F(V)), (1: V=F(U)),
2718	trc_limb_table	limb_4_tarf_base_start_u	FLOAT4	N/A	%f	NUMBER	TBD	TBD	describes parabolic shape for limb fitting in coordinates of TARF
2719	trc_limb_table	limb_4_tarf_base_start_v	FLOAT4	N/A	%f	NUMBER	TBD	TBD	describes parabolic shape for limb fitting in coordinates of TARF

	A	B	C	D	E	F	G	H	I
2720	trc_limb_table	limb_4_tarf_base_stop_u	FLOAT4	N/A	%f	NUMBER	TBD	TBD	describes parabolic shape for limb fitting in coordinates of TARF
2721	trc_limb_table	limb_4_tarf_base_stop_v	FLOAT4	N/A	%f	NUMBER	TBD	TBD	describes parabolic shape for limb fitting in coordinates of TARF
2722	trc_limb_table	limb_4_tarf_base_lc_num	INT4	N/A	%d	NUMBER	TBD	TBD	describes parabolic shape for limb fitting in coordinates of TARF
2723	trc_limb_table	limb_4_tarf_pc_d	FLOAT4	N/A	%f	NUMBER	TBD	TBD	describes parabolic shape for limb fitting in coordinates of TARF
2724	trc_limb_table	limb_4_tarf_pc_e	FLOAT4	N/A	%f	NUMBER	TBD	TBD	describes parabolic shape for limb fitting in coordinates of TARF
2725	trc_limb_table	limb_4_pos_tarf_status	INT4	N/A	%d	ENUM	0	1	current status of reported fixed position in TARF(0: NOT_VALID), (1: VALID),
2726	trc_limb_table	limb_4_pos_tarf_axis_u	FLOAT8	N/A	%f	NUMBER	-1	1	fixed U axis position in TARF, used for AOI positioning (during limb tracking)
2727	trc_limb_table	limb_4_pos_tarf_axis_v	FLOAT8	N/A	%f	NUMBER	-1	1	fixed V axis position in TARF, used for AOI positioning (during limb tracking)
2728	trc_limb_table	limb_4_pos_tarf_axis_w	FLOAT8	N/A	%f	NUMBER	-1	1	fixed W axis position in TARF, used for AOI positioning (during limb tracking)
2729	trc_limb_table	limb_4_pixel_format	INT4	N/A	%d	ENUM	0	1	pixel format of image used for limb calculation(0: 8_BIT), (1: 14_BIT),
2730	trc_limb_table	limb_4_pixel_group	INT4	N/A	%d	ENUM	0	2	pixel grouping of image used for limb calculation(0: 1x1), (1: 2x2), (2: 4x4),
2731	trc_limb_table	limb_4_quality	FLOAT4	N/A	%f	NUMBER	0	1	quality estimate of limb calculation
2732	trc_limb_table	limb_5_state	UINT4	N/A	%u	ENUM	0	1	reports whether limb calculation is on/off within this AOI(0: OFF), (1: ON),
2733	trc_limb_table	limb_5_camera_id	UINT4	N/A	%u	ENUM	0	2	specifies the camera which is related to the limb data for this AOI(0: WFI), (1: FFI), (2: FPI),
2734	trc_limb_table	limb_5_aoi_snr	UINT4	N/A	%u	NUMBER	0	999	serial number of the AOI to which the limb data applies
2735	trc_limb_table	limb_5_aoi_fov	UINT4	N/A	%u	ENUM	0	2	reports the position of the AOI relative to the imager FOV(0: ON_FOV), (1: PART_FOV), (2: OFF_FOV),
2736	trc_limb_table	limb_5_image_snr	INT4	N/A	%d	NUMBER	10000	39999	specifies the image which is related to the limb data for this AOI
2737	trc_limb_table	limb_5_ts_exp_cent_tv	TIME8	seconds	%d.%09d	NUMBER	0	2147483647	timestamp referring to center of image exposure
2738	trc_limb_table	limb_5_state_move_exp	UINT4	N/A	%u	ENUM	0	3	reports move status of telescope during image exposure(0: LOCKED), (1: SETTLED), (2: TRANSIENT), (3: NOT_READY),
2739	trc_limb_table	limb_5_state_tsc_exp	UINT4	N/A	%u	ENUM	0	6	reports TASCU status during image exposure(0: ACTIVE), (1: MOTION_PROG_TRACK), (2: MOTION_SLEW), (3: MOTION_POS_REL), (4: MOTION_POS_ABS), (5: NOT_READY), (6: TSC_DATA_MISSING),
2740	trc_limb_table	limb_5_pix_base_pc_a	FLOAT4	N/A	%f	NUMBER	TBD	TBD	describes parabolic shape for limb fitting in coordinates of the raw pixel image
2741	trc_limb_table	limb_5_pix_base_pc_b	FLOAT4	N/A	%f	NUMBER	TBD	TBD	describes parabolic shape for limb fitting in coordinates of the raw pixel image
2742	trc_limb_table	limb_5_pix_base_pc_c	FLOAT4	N/A	%f	NUMBER	TBD	TBD	describes parabolic shape for limb fitting in coordinates of the raw pixel image
2743	trc_limb_table	limb_5_pix_base_type	UINT4	N/A	%u	ENUM	0	1	describes parabolic shape for limb fitting in coordinates of the raw pixel image(0: U=F(V)), (1: V=F(U)),
2744	trc_limb_table	limb_5_pix_base_start_u	FLOAT4	N/A	%f	NUMBER	TBD	TBD	describes parabolic shape for limb fitting in coordinates of the raw pixel image
2745	trc_limb_table	limb_5_pix_base_start_v	FLOAT4	N/A	%f	NUMBER	TBD	TBD	describes parabolic shape for limb fitting in coordinates of the raw pixel image
2746	trc_limb_table	limb_5_pix_base_stop_u	FLOAT4	N/A	%f	NUMBER	TBD	TBD	describes parabolic shape for limb fitting in coordinates of the raw pixel image

	A	B	C	D	E	F	G	H	I
2747	trc_limb_table	limb_5_pix_base_stop_v	FLOAT4	N/A	%f	NUMBER	TBD	TBD	describes parabolic shape for limb fitting in coordinates of the raw pixel image
2748	trc_limb_table	limb_5_pix_base_lc_num	INT4	N/A	%d	NUMBER	TBD	TBD	describes parabolic shape for limb fitting in coordinates of the raw pixel image
2749	trc_limb_table	limb_5_crf_pc_a	FLOAT4	N/A	%f	NUMBER	TBD	TBD	describes parabolic shape for limb fitting in coordinates of the camera reference frame
2750	trc_limb_table	limb_5_crf_pc_b	FLOAT4	N/A	%f	NUMBER	TBD	TBD	describes parabolic shape for limb fitting in coordinates of the camera reference frame
2751	trc_limb_table	limb_5_crf_pc_c	FLOAT4	N/A	%f	NUMBER	TBD	TBD	describes parabolic shape for limb fitting in coordinates of the camera reference frame
2752	trc_limb_table	limb_5_crf_type	UINT4	N/A	%u	ENUM	0	1	describes parabolic shape for limb fitting in coordinates of the camera reference frame(0: U=F(V)), (1: V=F(U)),
2753	trc_limb_table	limb_5_crf_start_u	FLOAT4	N/A	%f	NUMBER	TBD	TBD	describes parabolic shape for limb fitting in coordinates of the camera reference frame
2754	trc_limb_table	limb_5_crf_start_v	FLOAT4	N/A	%f	NUMBER	TBD	TBD	describes parabolic shape for limb fitting in coordinates of the camera reference frame
2755	trc_limb_table	limb_5_crf_stop_u	FLOAT4	N/A	%f	NUMBER	TBD	TBD	describes parabolic shape for limb fitting in coordinates of the camera reference frame
2756	trc_limb_table	limb_5_crf_stop_v	FLOAT4	N/A	%f	NUMBER	TBD	TBD	describes parabolic shape for limb fitting in coordinates of the camera reference frame
2757	trc_limb_table	limb_5_crf_lc_num	INT4	N/A	%d	NUMBER	TBD	TBD	describes parabolic shape for limb fitting in coordinates of the camera reference frame
2758	trc_limb_table	limb_5_tarf_base_pc_a	FLOAT4	N/A	%f	NUMBER	TBD	TBD	describes parabolic shape for limb fitting in coordinates of TARF
2759	trc_limb_table	limb_5_tarf_base_pc_b	FLOAT4	N/A	%f	NUMBER	TBD	TBD	describes parabolic shape for limb fitting in coordinates of TARF
2760	trc_limb_table	limb_5_tarf_base_pc_c	FLOAT4	N/A	%f	NUMBER	TBD	TBD	describes parabolic shape for limb fitting in coordinates of TARF
2761	trc_limb_table	limb_5_tarf_base_type	UINT4	N/A	%u	ENUM	0	1	describes parabolic shape for limb fitting in coordinates of TARF(0: U=F(V)), (1: V=F(U)),
2762	trc_limb_table	limb_5_tarf_base_start_u	FLOAT4	N/A	%f	NUMBER	TBD	TBD	describes parabolic shape for limb fitting in coordinates of TARF
2763	trc_limb_table	limb_5_tarf_base_start_v	FLOAT4	N/A	%f	NUMBER	TBD	TBD	describes parabolic shape for limb fitting in coordinates of TARF
2764	trc_limb_table	limb_5_tarf_base_stop_u	FLOAT4	N/A	%f	NUMBER	TBD	TBD	describes parabolic shape for limb fitting in coordinates of TARF
2765	trc_limb_table	limb_5_tarf_base_stop_v	FLOAT4	N/A	%f	NUMBER	TBD	TBD	describes parabolic shape for limb fitting in coordinates of TARF
2766	trc_limb_table	limb_5_tarf_base_lc_num	INT4	N/A	%d	NUMBER	TBD	TBD	describes parabolic shape for limb fitting in coordinates of TARF
2767	trc_limb_table	limb_5_tarf_pc_d	FLOAT4	N/A	%f	NUMBER	TBD	TBD	describes parabolic shape for limb fitting in coordinates of TARF
2768	trc_limb_table	limb_5_tarf_pc_e	FLOAT4	N/A	%f	NUMBER	TBD	TBD	describes parabolic shape for limb fitting in coordinates of TARF
2769	trc_limb_table	limb_5_pos_tarf_status	INT4	N/A	%d	ENUM	0	1	current status of reported fixed position in TARF(0: NOT_VALID), (1: VALID),
2770	trc_limb_table	limb_5_pos_tarf_axis_u	FLOAT8	N/A	%f	NUMBER	-1	1	fixed U axis position in TARF, used for AOI positioning (during limb tracking)
2771	trc_limb_table	limb_5_pos_tarf_axis_v	FLOAT8	N/A	%f	NUMBER	-1	1	fixed V axis position in TARF, used for AOI positioning (during limb tracking)
2772	trc_limb_table	limb_5_pos_tarf_axis_w	FLOAT8	N/A	%f	NUMBER	-1	1	fixed W axis position in TARF, used for AOI positioning (during limb tracking)
2773	trc_limb_table	limb_5_pixel_format	INT4	N/A	%d	ENUM	0	1	pixel format of image used for limb calculation(0: 8_BIT), (1: 14_BIT),
2774	trc_limb_table	limb_5_pixel_group	INT4	N/A	%d	ENUM	0	2	pixel grouping of image used for limb calculation(0: 1x1), (1: 2x2), (2: 4x4),
2775	trc_limb_table	limb_5_quality	FLOAT4	N/A	%f	NUMBER	0	1	quality estimate of limb calculation
2776	trc_limb_table	limb_6_state	UINT4	N/A	%u	ENUM	0	1	reports whether limb calculation is on/off within this AOI(0: OFF), (1: ON),

	A	B	C	D	E	F	G	H	I
2777	trc_limb_table	limb_6_camera_id	UINT4	N/A	%u	ENUM	0	2	specifies the camera which is related to the limb data for this AOI(0: WFI), (1: FFI), (2: FPI),
2778	trc_limb_table	limb_6_aoi_snr	UINT4	N/A	%u	NUMBER	0	999	serial number of the AOI to which the limb data applies
2779	trc_limb_table	limb_6_aoi_fov	UINT4	N/A	%u	ENUM	0	2	reports the position of the AOI relative to the imager FOV(0: ON_FOV), (1: PART_FOV), (2: OFF_FOV),
2780	trc_limb_table	limb_6_image_snr	INT4	N/A	%d	NUMBER	10000	39999	specifies the image which is related to the limb data for this AOI
2781	trc_limb_table	limb_6_ts_exp_cent_tv	TIME8	seconds	%d.%09d	NUMBER	0	2147483647	timestamp referring to center of image exposure
2782	trc_limb_table	limb_6_state_move_exp	UINT4	N/A	%u	ENUM	0	3	reports move status of telescope during image exposure(0: LOCKED), (1: SETTLED), (2: TRANSIENT), (3: NOT_READY),
2783	trc_limb_table	limb_6_state_tsc_exp	UINT4	N/A	%u	ENUM	0	6	reports TASCU status during image exposure(0: ACTIVE), (1: MOTION_PROG_TRACK), (2: MOTION_SLEW), (3: MOTION_POS_REL), (4: MOTION_POS_ABS), (5: NOT_READY), (6: TSC_DATA_MISSING),
2784	trc_limb_table	limb_6_pix_base_pc_a	FLOAT4	N/A	%f	NUMBER	TBD	TBD	describes parabolic shape for limb fitting in coordinates of the raw pixel image
2785	trc_limb_table	limb_6_pix_base_pc_b	FLOAT4	N/A	%f	NUMBER	TBD	TBD	describes parabolic shape for limb fitting in coordinates of the raw pixel image
2786	trc_limb_table	limb_6_pix_base_pc_c	FLOAT4	N/A	%f	NUMBER	TBD	TBD	describes parabolic shape for limb fitting in coordinates of the raw pixel image
2787	trc_limb_table	limb_6_pix_base_type	UINT4	N/A	%u	ENUM	0	1	describes parabolic shape for limb fitting in coordinates of the raw pixel image(0: U=F(V)), (1: V=F(U)),
2788	trc_limb_table	limb_6_pix_base_start_u	FLOAT4	N/A	%f	NUMBER	TBD	TBD	describes parabolic shape for limb fitting in coordinates of the raw pixel image
2789	trc_limb_table	limb_6_pix_base_start_v	FLOAT4	N/A	%f	NUMBER	TBD	TBD	describes parabolic shape for limb fitting in coordinates of the raw pixel image
2790	trc_limb_table	limb_6_pix_base_stop_u	FLOAT4	N/A	%f	NUMBER	TBD	TBD	describes parabolic shape for limb fitting in coordinates of the raw pixel image
2791	trc_limb_table	limb_6_pix_base_stop_v	FLOAT4	N/A	%f	NUMBER	TBD	TBD	describes parabolic shape for limb fitting in coordinates of the raw pixel image
2792	trc_limb_table	limb_6_pix_base_lc_num	INT4	N/A	%d	NUMBER	TBD	TBD	describes parabolic shape for limb fitting in coordinates of the raw pixel image
2793	trc_limb_table	limb_6_crf_pc_a	FLOAT4	N/A	%f	NUMBER	TBD	TBD	describes parabolic shape for limb fitting in coordinates of the camera reference frame
2794	trc_limb_table	limb_6_crf_pc_b	FLOAT4	N/A	%f	NUMBER	TBD	TBD	describes parabolic shape for limb fitting in coordinates of the camera reference frame
2795	trc_limb_table	limb_6_crf_pc_c	FLOAT4	N/A	%f	NUMBER	TBD	TBD	describes parabolic shape for limb fitting in coordinates of the camera reference frame
2796	trc_limb_table	limb_6_crf_type	UINT4	N/A	%u	ENUM	0	1	describes parabolic shape for limb fitting in coordinates of the camera reference frame(0: U=F(V)), (1: V=F(U)),
2797	trc_limb_table	limb_6_crf_start_u	FLOAT4	N/A	%f	NUMBER	TBD	TBD	describes parabolic shape for limb fitting in coordinates of the camera reference frame
2798	trc_limb_table	limb_6_crf_start_v	FLOAT4	N/A	%f	NUMBER	TBD	TBD	describes parabolic shape for limb fitting in coordinates of the camera reference frame
2799	trc_limb_table	limb_6_crf_stop_u	FLOAT4	N/A	%f	NUMBER	TBD	TBD	describes parabolic shape for limb fitting in coordinates of the camera reference frame
2800	trc_limb_table	limb_6_crf_stop_v	FLOAT4	N/A	%f	NUMBER	TBD	TBD	describes parabolic shape for limb fitting in coordinates of the camera reference frame
2801	trc_limb_table	limb_6_crf_lc_num	INT4	N/A	%d	NUMBER	TBD	TBD	describes parabolic shape for limb fitting in coordinates of the camera reference frame

	A	B	C	D	E	F	G	H	I
2802	trc_limb_table	limb_6_tarf_base_pc_a	FLOAT4	N/A	%f	NUMBER	TBD	TBD	describes parabolic shape for limb fitting in coordinates of TARF
2803	trc_limb_table	limb_6_tarf_base_pc_b	FLOAT4	N/A	%f	NUMBER	TBD	TBD	describes parabolic shape for limb fitting in coordinates of TARF
2804	trc_limb_table	limb_6_tarf_base_pc_c	FLOAT4	N/A	%f	NUMBER	TBD	TBD	describes parabolic shape for limb fitting in coordinates of TARF
2805	trc_limb_table	limb_6_tarf_base_type	UINT4	N/A	%u	ENUM	0	1	describes parabolic shape for limb fitting in coordinates of TARF(0: U=F(V)), (1: V=F(U)),
2806	trc_limb_table	limb_6_tarf_base_start_u	FLOAT4	N/A	%f	NUMBER	TBD	TBD	describes parabolic shape for limb fitting in coordinates of TARF
2807	trc_limb_table	limb_6_tarf_base_start_v	FLOAT4	N/A	%f	NUMBER	TBD	TBD	describes parabolic shape for limb fitting in coordinates of TARF
2808	trc_limb_table	limb_6_tarf_base_stop_u	FLOAT4	N/A	%f	NUMBER	TBD	TBD	describes parabolic shape for limb fitting in coordinates of TARF
2809	trc_limb_table	limb_6_tarf_base_stop_v	FLOAT4	N/A	%f	NUMBER	TBD	TBD	describes parabolic shape for limb fitting in coordinates of TARF
2810	trc_limb_table	limb_6_tarf_base_lc_num	INT4	N/A	%d	NUMBER	TBD	TBD	describes parabolic shape for limb fitting in coordinates of TARF
2811	trc_limb_table	limb_6_tarf_pc_d	FLOAT4	N/A	%f	NUMBER	TBD	TBD	describes parabolic shape for limb fitting in coordinates of TARF
2812	trc_limb_table	limb_6_tarf_pc_e	FLOAT4	N/A	%f	NUMBER	TBD	TBD	describes parabolic shape for limb fitting in coordinates of TARF
2813	trc_limb_table	limb_6_pos_tarf_status	INT4	N/A	%d	ENUM	0	1	current status of reported fixed position in TARF(0: NOT_VALID), (1: VALID),
2814	trc_limb_table	limb_6_pos_tarf_axis_u	FLOAT8	N/A	%f	NUMBER	-1	1	fixed U axis position in TARF, used for AOI positioning (during limb tracking)
2815	trc_limb_table	limb_6_pos_tarf_axis_v	FLOAT8	N/A	%f	NUMBER	-1	1	fixed V axis position in TARF, used for AOI positioning (during limb tracking)
2816	trc_limb_table	limb_6_pos_tarf_axis_w	FLOAT8	N/A	%f	NUMBER	-1	1	fixed W axis position in TARF, used for AOI positioning (during limb tracking)
2817	trc_limb_table	limb_6_pixel_format	INT4	N/A	%d	ENUM	0	1	pixel format of image used for limb calculation(0: 8_BIT), (1: 14_BIT),
2818	trc_limb_table	limb_6_pixel_group	INT4	N/A	%d	ENUM	0	2	pixel grouping of image used for limb calculation(0: 1x1), (1: 2x2), (2: 4x4),
2819	trc_limb_table	limb_6_quality	FLOAT4	N/A	%f	NUMBER	0	1	quality estimate of limb calculation
2820	trc_limb_table	limb_7_state	UINT4	N/A	%u	ENUM	0	1	reports whether limb calculation is on/off within this AOI(0: OFF), (1: ON),
2821	trc_limb_table	limb_7_camera_id	UINT4	N/A	%u	ENUM	0	2	specifies the camera which is related to the limb data for this AOI(0: WFI), (1: FFI), (2: FPI),
2822	trc_limb_table	limb_7_aoi_snr	UINT4	N/A	%u	NUMBER	0	999	serial number of the AOI to which the limb data applies
2823	trc_limb_table	limb_7_aoi_fov	UINT4	N/A	%u	ENUM	0	2	reports the position of the AOI relative to the imager FOV(0: ON_FOV), (1: PART_FOV), (2: OFF_FOV),
2824	trc_limb_table	limb_7_image_snr	INT4	N/A	%d	NUMBER	10000	39999	specifies the image which is related to the limb data for this AOI
2825	trc_limb_table	limb_7_ts_exp_cent_tv	TIME8	seconds	%d.%09d	NUMBER	0	2147483647	timestamp referring to center of image exposure
2826	trc_limb_table	limb_7_state_move_exp	UINT4	N/A	%u	ENUM	0	3	reports move status of telescope during image exposure(0: LOCKED), (1: SETTLED), (2: TRANSIENT), (3: NOT_READY),
2827	trc_limb_table	limb_7_state_tsc_exp	UINT4	N/A	%u	ENUM	0	6	reports TASCU status during image exposure(0: ACTIVE), (1: MOTION_PROG_TRACK), (2: MOTION_SLEW), (3: MOTION_POS_REL), (4: MOTION_POS_ABS), (5: NOT_READY), (6: TSC_DATA_MISSING),
2828	trc_limb_table	limb_7_pix_base_pc_a	FLOAT4	N/A	%f	NUMBER	TBD	TBD	describes parabolic shape for limb fitting in coordinates of the raw pixel image
2829	trc_limb_table	limb_7_pix_base_pc_b	FLOAT4	N/A	%f	NUMBER	TBD	TBD	describes parabolic shape for limb fitting in coordinates of the raw pixel image
2830	trc_limb_table	limb_7_pix_base_pc_c	FLOAT4	N/A	%f	NUMBER	TBD	TBD	describes parabolic shape for limb fitting in coordinates of the raw pixel image

	A	B	C	D	E	F	G	H	I
2831	trc_limb_table	limb_7_pix_base_type	UINT4	N/A	%u	ENUM	0	1	describes parabolic shape for limb fitting in coordinates of the raw pixel image(0: U=F(V)), (1: V=F(U)),
2832	trc_limb_table	limb_7_pix_base_start_u	FLOAT4	N/A	%f	NUMBER	TBD	TBD	describes parabolic shape for limb fitting in coordinates of the raw pixel image
2833	trc_limb_table	limb_7_pix_base_start_v	FLOAT4	N/A	%f	NUMBER	TBD	TBD	describes parabolic shape for limb fitting in coordinates of the raw pixel image
2834	trc_limb_table	limb_7_pix_base_stop_u	FLOAT4	N/A	%f	NUMBER	TBD	TBD	describes parabolic shape for limb fitting in coordinates of the raw pixel image
2835	trc_limb_table	limb_7_pix_base_stop_v	FLOAT4	N/A	%f	NUMBER	TBD	TBD	describes parabolic shape for limb fitting in coordinates of the raw pixel image
2836	trc_limb_table	limb_7_pix_base_lc_num	INT4	N/A	%d	NUMBER	TBD	TBD	describes parabolic shape for limb fitting in coordinates of the raw pixel image
2837	trc_limb_table	limb_7_crf_pc_a	FLOAT4	N/A	%f	NUMBER	TBD	TBD	describes parabolic shape for limb fitting in coordinates of the camera reference frame
2838	trc_limb_table	limb_7_crf_pc_b	FLOAT4	N/A	%f	NUMBER	TBD	TBD	describes parabolic shape for limb fitting in coordinates of the camera reference frame
2839	trc_limb_table	limb_7_crf_pc_c	FLOAT4	N/A	%f	NUMBER	TBD	TBD	describes parabolic shape for limb fitting in coordinates of the camera reference frame
2840	trc_limb_table	limb_7_crf_type	UINT4	N/A	%u	ENUM	0	1	describes parabolic shape for limb fitting in coordinates of the camera reference frame(0: U=F(V)), (1: V=F(U)),
2841	trc_limb_table	limb_7_crf_start_u	FLOAT4	N/A	%f	NUMBER	TBD	TBD	describes parabolic shape for limb fitting in coordinates of the camera reference frame
2842	trc_limb_table	limb_7_crf_start_v	FLOAT4	N/A	%f	NUMBER	TBD	TBD	describes parabolic shape for limb fitting in coordinates of the camera reference frame
2843	trc_limb_table	limb_7_crf_stop_u	FLOAT4	N/A	%f	NUMBER	TBD	TBD	describes parabolic shape for limb fitting in coordinates of the camera reference frame
2844	trc_limb_table	limb_7_crf_stop_v	FLOAT4	N/A	%f	NUMBER	TBD	TBD	describes parabolic shape for limb fitting in coordinates of the camera reference frame
2845	trc_limb_table	limb_7_crf_lc_num	INT4	N/A	%d	NUMBER	TBD	TBD	describes parabolic shape for limb fitting in coordinates of the camera reference frame
2846	trc_limb_table	limb_7_tarf_base_pc_a	FLOAT4	N/A	%f	NUMBER	TBD	TBD	describes parabolic shape for limb fitting in coordinates of TARF
2847	trc_limb_table	limb_7_tarf_base_pc_b	FLOAT4	N/A	%f	NUMBER	TBD	TBD	describes parabolic shape for limb fitting in coordinates of TARF
2848	trc_limb_table	limb_7_tarf_base_pc_c	FLOAT4	N/A	%f	NUMBER	TBD	TBD	describes parabolic shape for limb fitting in coordinates of TARF
2849	trc_limb_table	limb_7_tarf_base_type	UINT4	N/A	%u	ENUM	0	1	describes parabolic shape for limb fitting in coordinates of TARF(0: U=F(V)), (1: V=F(U)),
2850	trc_limb_table	limb_7_tarf_base_start_u	FLOAT4	N/A	%f	NUMBER	TBD	TBD	describes parabolic shape for limb fitting in coordinates of TARF
2851	trc_limb_table	limb_7_tarf_base_start_v	FLOAT4	N/A	%f	NUMBER	TBD	TBD	describes parabolic shape for limb fitting in coordinates of TARF
2852	trc_limb_table	limb_7_tarf_base_stop_u	FLOAT4	N/A	%f	NUMBER	TBD	TBD	describes parabolic shape for limb fitting in coordinates of TARF
2853	trc_limb_table	limb_7_tarf_base_stop_v	FLOAT4	N/A	%f	NUMBER	TBD	TBD	describes parabolic shape for limb fitting in coordinates of TARF
2854	trc_limb_table	limb_7_tarf_base_lc_num	INT4	N/A	%d	NUMBER	TBD	TBD	describes parabolic shape for limb fitting in coordinates of TARF
2855	trc_limb_table	limb_7_tarf_pc_d	FLOAT4	N/A	%f	NUMBER	TBD	TBD	describes parabolic shape for limb fitting in coordinates of TARF
2856	trc_limb_table	limb_7_tarf_pc_e	FLOAT4	N/A	%f	NUMBER	TBD	TBD	describes parabolic shape for limb fitting in coordinates of TARF
2857	trc_limb_table	limb_7_pos_tarf_status	INT4	N/A	%d	ENUM	0	1	current status of reported fixed position in TARF(0: NOT_VALID), (1: VALID),
2858	trc_limb_table	limb_7_pos_tarf_axis_u	FLOAT8	N/A	%f	NUMBER	-1	1	fixed U axis position in TARF, used for AOI positioning (during limb tracking)
2859	trc_limb_table	limb_7_pos_tarf_axis_v	FLOAT8	N/A	%f	NUMBER	-1	1	fixed V axis position in TARF, used for AOI positioning (during limb tracking)

	A	B	C	D	E	F	G	H	I
2860	trc_limb_table	limb_7_pos_tarf_axis_w	FLOAT8	N/A	%f	NUMBER	-1	1	fixed W axis position in TARF, used for AOI positioning (during limb tracking)
2861	trc_limb_table	limb_7_pixel_format	INT4	N/A	%d	ENUM	0	1	pixel format of image used for limb calculation(0: 8_BIT), (1: 14_BIT),
2862	trc_limb_table	limb_7_pixel_group	INT4	N/A	%d	ENUM	0	2	pixel grouping of image used for limb calculation(0: 1x1), (1: 2x2), (2: 4x4),
2863	trc_limb_table	limb_7_quality	FLOAT4	N/A	%f	NUMBER	0	1	quality estimate of limb calculation
2864	trc_limb_table	limb_8_state	UINT4	N/A	%u	ENUM	0	1	reports whether limb calculation is on/off within this AOI(0: OFF), (1: ON),
2865	trc_limb_table	limb_8_camera_id	UINT4	N/A	%u	ENUM	0	2	specifies the camera which is related to the limb data for this AOI(0: WFI), (1: FFI), (2: FPI),
2866	trc_limb_table	limb_8_aoi_snr	UINT4	N/A	%u	NUMBER	0	999	serial number of the AOI to which the limb data applies
2867	trc_limb_table	limb_8_aoi_fov	UINT4	N/A	%u	ENUM	0	2	reports the position of the AOI relative to the imager FOV(0: ON_FOV), (1: PART_FOV), (2: OFF_FOV),
2868	trc_limb_table	limb_8_image_snr	INT4	N/A	%d	NUMBER	10000	39999	specifies the image which is related to the limb data for this AOI
2869	trc_limb_table	limb_8_ts_exp_cent_tv	TIME8	seconds	%d.%09d	NUMBER	0	2147483647	timestamp referring to center of image exposure
2870	trc_limb_table	limb_8_state_move_exp	UINT4	N/A	%u	ENUM	0	3	reports move status of telescope during image exposure(0: LOCKED), (1: SETTLED), (2: TRANSIENT), (3: NOT_READY),
2871	trc_limb_table	limb_8_state_tsc_exp	UINT4	N/A	%u	ENUM	0	6	reports TASCU status during image exposure(0: ACTIVE), (1: MOTION_PROG_TRACK), (2: MOTION_SLEW), (3: MOTION_POS_REL), (4: MOTION_POS_ABS), (5: NOT_READY), (6: TSC_DATA_MISSING),
2872	trc_limb_table	limb_8_pix_base_pc_a	FLOAT4	N/A	%f	NUMBER	TBD	TBD	describes parabolic shape for limb fitting in coordinates of the raw pixel image
2873	trc_limb_table	limb_8_pix_base_pc_b	FLOAT4	N/A	%f	NUMBER	TBD	TBD	describes parabolic shape for limb fitting in coordinates of the raw pixel image
2874	trc_limb_table	limb_8_pix_base_pc_c	FLOAT4	N/A	%f	NUMBER	TBD	TBD	describes parabolic shape for limb fitting in coordinates of the raw pixel image
2875	trc_limb_table	limb_8_pix_base_type	UINT4	N/A	%u	ENUM	0	1	describes parabolic shape for limb fitting in coordinates of the raw pixel image(0: U=F(V)), (1: V=F(U)),
2876	trc_limb_table	limb_8_pix_base_start_u	FLOAT4	N/A	%f	NUMBER	TBD	TBD	describes parabolic shape for limb fitting in coordinates of the raw pixel image
2877	trc_limb_table	limb_8_pix_base_start_v	FLOAT4	N/A	%f	NUMBER	TBD	TBD	describes parabolic shape for limb fitting in coordinates of the raw pixel image
2878	trc_limb_table	limb_8_pix_base_stop_u	FLOAT4	N/A	%f	NUMBER	TBD	TBD	describes parabolic shape for limb fitting in coordinates of the raw pixel image
2879	trc_limb_table	limb_8_pix_base_stop_v	FLOAT4	N/A	%f	NUMBER	TBD	TBD	describes parabolic shape for limb fitting in coordinates of the raw pixel image
2880	trc_limb_table	limb_8_pix_base_lc_num	INT4	N/A	%d	NUMBER	TBD	TBD	describes parabolic shape for limb fitting in coordinates of the raw pixel image
2881	trc_limb_table	limb_8_crf_pc_a	FLOAT4	N/A	%f	NUMBER	TBD	TBD	describes parabolic shape for limb fitting in coordinates of the camera reference frame
2882	trc_limb_table	limb_8_crf_pc_b	FLOAT4	N/A	%f	NUMBER	TBD	TBD	describes parabolic shape for limb fitting in coordinates of the camera reference frame
2883	trc_limb_table	limb_8_crf_pc_c	FLOAT4	N/A	%f	NUMBER	TBD	TBD	describes parabolic shape for limb fitting in coordinates of the camera reference frame
2884	trc_limb_table	limb_8_crf_type	UINT4	N/A	%u	ENUM	0	1	describes parabolic shape for limb fitting in coordinates of the camera reference frame(0: U=F(V)), (1: V=F(U)),

	A	B	C	D	E	F	G	H	I
2885	trc_limb_table	limb_8_crf_start_u	FLOAT4	N/A	%f	NUMBER	TBD	TBD	describes parabolic shape for limb fitting in coordinates of the camera reference frame
2886	trc_limb_table	limb_8_crf_start_v	FLOAT4	N/A	%f	NUMBER	TBD	TBD	describes parabolic shape for limb fitting in coordinates of the camera reference frame
2887	trc_limb_table	limb_8_crf_stop_u	FLOAT4	N/A	%f	NUMBER	TBD	TBD	describes parabolic shape for limb fitting in coordinates of the camera reference frame
2888	trc_limb_table	limb_8_crf_stop_v	FLOAT4	N/A	%f	NUMBER	TBD	TBD	describes parabolic shape for limb fitting in coordinates of the camera reference frame
2889	trc_limb_table	limb_8_crf_lc_num	INT4	N/A	%d	NUMBER	TBD	TBD	describes parabolic shape for limb fitting in coordinates of the camera reference frame
2890	trc_limb_table	limb_8_tarf_base_pc_a	FLOAT4	N/A	%f	NUMBER	TBD	TBD	describes parabolic shape for limb fitting in coordinates of TARF
2891	trc_limb_table	limb_8_tarf_base_pc_b	FLOAT4	N/A	%f	NUMBER	TBD	TBD	describes parabolic shape for limb fitting in coordinates of TARF
2892	trc_limb_table	limb_8_tarf_base_pc_c	FLOAT4	N/A	%f	NUMBER	TBD	TBD	describes parabolic shape for limb fitting in coordinates of TARF
2893	trc_limb_table	limb_8_tarf_base_type	UINT4	N/A	%u	ENUM	0	1	describes parabolic shape for limb fitting in coordinates of TARF(0: U=F(V)), (1: V=F(U)),
2894	trc_limb_table	limb_8_tarf_base_start_u	FLOAT4	N/A	%f	NUMBER	TBD	TBD	describes parabolic shape for limb fitting in coordinates of TARF
2895	trc_limb_table	limb_8_tarf_base_start_v	FLOAT4	N/A	%f	NUMBER	TBD	TBD	describes parabolic shape for limb fitting in coordinates of TARF
2896	trc_limb_table	limb_8_tarf_base_stop_u	FLOAT4	N/A	%f	NUMBER	TBD	TBD	describes parabolic shape for limb fitting in coordinates of TARF
2897	trc_limb_table	limb_8_tarf_base_stop_v	FLOAT4	N/A	%f	NUMBER	TBD	TBD	describes parabolic shape for limb fitting in coordinates of TARF
2898	trc_limb_table	limb_8_tarf_base_lc_num	INT4	N/A	%d	NUMBER	TBD	TBD	describes parabolic shape for limb fitting in coordinates of TARF
2899	trc_limb_table	limb_8_tarf_pc_d	FLOAT4	N/A	%f	NUMBER	TBD	TBD	describes parabolic shape for limb fitting in coordinates of TARF
2900	trc_limb_table	limb_8_tarf_pc_e	FLOAT4	N/A	%f	NUMBER	TBD	TBD	describes parabolic shape for limb fitting in coordinates of TARF
2901	trc_limb_table	limb_8_pos_tarf_status	INT4	N/A	%d	ENUM	0	1	current status of reported fixed position in TARF(0: NOT_VALID), (1: VALID),
2902	trc_limb_table	limb_8_pos_tarf_axis_u	FLOAT8	N/A	%f	NUMBER	-1	1	fixed U axis position in TARF, used for AOI positioning (during limb tracking)
2903	trc_limb_table	limb_8_pos_tarf_axis_v	FLOAT8	N/A	%f	NUMBER	-1	1	fixed V axis position in TARF, used for AOI positioning (during limb tracking)
2904	trc_limb_table	limb_8_pos_tarf_axis_w	FLOAT8	N/A	%f	NUMBER	-1	1	fixed W axis position in TARF, used for AOI positioning (during limb tracking)
2905	trc_limb_table	limb_8_pixel_format	INT4	N/A	%d	ENUM	0	1	pixel format of image used for limb calculation(0: 8_BIT), (1: 14_BIT),
2906	trc_limb_table	limb_8_pixel_group	INT4	N/A	%d	ENUM	0	2	pixel grouping of image used for limb calculation(0: 1x1), (1: 2x2), (2: 4x4),
2907	trc_limb_table	limb_8_quality	FLOAT4	N/A	%f	NUMBER	0	1	quality estimate of limb calculation
2908	trc_distribution_table								contains AOI information to be distributed to other tracker processes
2909	trc_distribution_table	packet	BINARY	N/A	%s	NUMBER			data packet as it was received from the TA
2910	trc_distribution_table	pkt_timestamp	TIME8	seconds	%d.%09d	NUMBER	0	2147483647	time data packet was constructed by TA
2911	trc_distribution_table	timestamp	TIME8	seconds	%d.%09d	NUMBER	0	2147483647	time at which the event happened or was captured
2912	trc_distribution_table	table_id	UINT4	N/A	%u	NUMBER	0	4294967295	ID of the current table
2913	trc_distribution_table	dstr_centr_track	UINT4	N/A	%u	NUMBER	0	8	AOI whose centroid data needs to be sent to the Two-Axis Position calculator process for tracking purposes
2914	trc_distribution_table	dstr_limb1_track	UINT4	N/A	%u	NUMBER	0	8	AOI whose limb data needs to be sent to the Two-Axis Position calculator process for tracking purposes

	A	B	C	D	E	F	G	H	I
2915	trc_distribution_table	dstr_limb2_track	UINT4	N/A	%u	NUMBER	0	8	AOI whose limb data needs to be sent to the Two-Axis Position calculator process for tracking purposes
2916	trc_distribution_table	dstr_centr1_rof	UINT4	N/A	%u	NUMBER	0	8	AOI whose centroid data needs to be sent to the ROF calculator process for ROF calculation
2917	trc_distribution_table	dstr_centr2_rof	UINT4	N/A	%u	NUMBER	0	8	AOI whose centroid data needs to be sent to the ROF calculator process for ROF calculation
2918	trc_distribution_table	dstr_focus	UINT4	N/A	%u	NUMBER	0	8	AOI whose centroid data needs to be sent to the FPI Focus Handler process for auto focus purposes
2919	trc_boresight_table								contains information about boresight positions on the images
2920	trc_boresight_table	packet	BINARY	N/A	%s	NUMBER			data packet as it was received from the TA
2921	trc_boresight_table	pkt_timestamp	TIME8	seconds	%d.%09d	NUMBER	0	2147483647	time data packet was constructed by TA
2922	trc_boresight_table	timestamp	TIME8	seconds	%d.%09d	NUMBER	0	2147483647	time at which the event happened or was captured
2923	trc_boresight_table	table_id	UINT4	N/A	%u	NUMBER	0	4294967295	ID of the current table
2924	trc_boresight_table	head_bs_def	UINT4	N/A	%u	ENUM	0	4	specifies how the current boresight is defined by the Command_Execution process(0: CLEARED), (1: TARF_SET), (2: WFI_PIX_SET), (3: FFI_PIX_SET), (4: FPI_PIX_SET),
2925	trc_boresight_table	head_bs_snr	UINT4	N/A	%u	NUMBER	0	999	serial number of the current boresight definition
2926	trc_boresight_table	head_ts_bs_def_tv	TIME8	seconds	%d.%09d	NUMBER	0	2147483647	timestamp for definition of the current boresight by the Command_Execution process
2927	trc_boresight_table	head_bs_tarf_status	INT4	N/A	%d	ENUM	0	1	status of TARF boresight position information(0: NOT_VALID), (1: VALID),
2928	trc_boresight_table	head_bs_tarf_axis_u	FLOAT8	N/A	%f	NUMBER	-1	1	Boresight position in TARF U axis
2929	trc_boresight_table	head_bs_tarf_axis_v	FLOAT8	N/A	%f	NUMBER	-1	1	Boresight position in TARF V axis
2930	trc_boresight_table	head_bs_tarf_axis_w	FLOAT8	N/A	%f	NUMBER	-1	1	Boresight position in TARF W axis
2931	trc_boresight_table	bs_wfi_bs_pix_status	UINT4	N/A	%u	ENUM	0	1	status of WFI boresight position information given by pixel coordinate values(0: NOT_VALID), (1: VALID),
2932	trc_boresight_table	bs_wfi_bs_pix_row	FLOAT8	N/A	%lf	NUMBER	0	1023	Boresight position in row coordinate of the raw pixel image
2933	trc_boresight_table	bs_wfi_bs_pix_column	FLOAT8	N/A	%lf	NUMBER	0	1023	Boresight position in column coordinate of the raw pixel image
2934	trc_boresight_table	bs_wfi_bs_pix_fov	UINT4	N/A	%u	ENUM	0	1	indicates boresight FOV status(0: ON_FOV), (1: OFF_FOV),
2935	trc_boresight_table	bs_wfi_bs_crf_status	INT4	N/A	%d	ENUM	0	1	status of WFI boresight position information given by camera reference frame coordinates(0: NOT_VALID), (1: VALID),
2936	trc_boresight_table	bs_wfi_bs_crf_axis_u	FLOAT8	N/A	%f	NUMBER	-1	1	Boresight position in camera reference frame U axis
2937	trc_boresight_table	bs_wfi_bs_crf_axis_v	FLOAT8	N/A	%f	NUMBER	-1	1	Boresight position in camera reference frame V axis
2938	trc_boresight_table	bs_wfi_bs_crf_axis_w	FLOAT8	N/A	%f	NUMBER	-1	1	Boresight position in camera reference frame W axis
2939	trc_boresight_table	bs_wfi_bs_irf_status	INT4	N/A	%d	ENUM	0	1	status of WFI boresight position information given by inertial reference frame coordinates(0: NOT_VALID), (1: VALID),
2940	trc_boresight_table	bs_wfi_bs_irf_axis_u	FLOAT8	N/A	%f	NUMBER	-1	1	Boresight position in inertial reference frame U axis
2941	trc_boresight_table	bs_wfi_bs_irf_axis_v	FLOAT8	N/A	%f	NUMBER	-1	1	Boresight position in inertial reference frame V axis
2942	trc_boresight_table	bs_wfi_bs_irf_axis_w	FLOAT8	N/A	%f	NUMBER	-1	1	Boresight position in inertial reference frame W axis
2943	trc_boresight_table	bs_wfi_image_snr	UINT4	N/A	%u	NUMBER	0	39999	identity of the image referring to the boresight data
2944	trc_boresight_table	bs_ffi_bs_pix_status	UINT4	N/A	%u	ENUM	0	1	status of FFI boresight position information given by pixel coordinate values(0: NOT_VALID), (1: VALID),
2945	trc_boresight_table	bs_ffi_bs_pix_row	FLOAT8	N/A	%lf	NUMBER	0	1023	Boresight position in row coordinate of the raw pixel image
2946	trc_boresight_table	bs_ffi_bs_pix_column	FLOAT8	N/A	%lf	NUMBER	0	1023	Boresight position in column coordinate of the raw pixel image
2947	trc_boresight_table	bs_ffi_bs_pix_fov	UINT4	N/A	%u	ENUM	0	1	indicates boresight FOV status(0: ON_FOV), (1: OFF_FOV),

	A	B	C	D	E	F	G	H	I
2948	trc_boresight_table	bs_ffi_bs_crf_status	INT4	N/A	%d	ENUM	0	1	status of FFI boresight position information given by camera reference frame coordinates(0: NOT_VALID), (1: VALID),
2949	trc_boresight_table	bs_ffi_bs_crf_axis_u	FLOAT8	N/A	%f	NUMBER	-1	1	Boresight position in camera reference frame U axis
2950	trc_boresight_table	bs_ffi_bs_crf_axis_v	FLOAT8	N/A	%f	NUMBER	-1	1	Boresight position in camera reference frame V axis
2951	trc_boresight_table	bs_ffi_bs_crf_axis_w	FLOAT8	N/A	%f	NUMBER	-1	1	Boresight position in camera reference frame W axis
2952	trc_boresight_table	bs_ffi_bs_irf_status	INT4	N/A	%d	ENUM	0	1	status of FFI boresight position information given by inertial reference frame coordinates(0: NOT_VALID), (1: VALID),
2953	trc_boresight_table	bs_ffi_bs_irf_axis_u	FLOAT8	N/A	%f	NUMBER	-1	1	Boresight position in inertial reference frame U axis
2954	trc_boresight_table	bs_ffi_bs_irf_axis_v	FLOAT8	N/A	%f	NUMBER	-1	1	Boresight position in inertial reference frame V axis
2955	trc_boresight_table	bs_ffi_bs_irf_axis_w	FLOAT8	N/A	%f	NUMBER	-1	1	Boresight position in inertial reference frame W axis
2956	trc_boresight_table	bs_ffi_image_snr	UINT4	N/A	%u	NUMBER	0	39999	identity of the image referring to the boresight data
2957	trc_boresight_table	bs_fpi_bs_pix_status	UINT4	N/A	%u	ENUM	0	1	status of FPI boresight position information given by pixel coordinate values(0: NOT_VALID), (1: VALID),
2958	trc_boresight_table	bs_fpi_bs_pix_row	FLOAT8	N/A	%lf	NUMBER	0	1023	Boresight position in row coordinate of the raw pixel image
2959	trc_boresight_table	bs_fpi_bs_pix_column	FLOAT8	N/A	%lf	NUMBER	0	1023	Boresight position in column coordinate of the raw pixel image
2960	trc_boresight_table	bs_fpi_bs_pix_fov	UINT4	N/A	%u	ENUM	0	1	indicates boresight FOV status(0: ON_FOV), (1: OFF_FOV),
2961	trc_boresight_table	bs_fpi_bs_crf_status	INT4	N/A	%d	ENUM	0	1	status of FPI boresight position information given by camera reference frame coordinates(0: NOT_VALID), (1: VALID),
2962	trc_boresight_table	bs_fpi_bs_crf_axis_u	FLOAT8	N/A	%f	NUMBER	-1	1	Boresight position in camera reference frame U axis
2963	trc_boresight_table	bs_fpi_bs_crf_axis_v	FLOAT8	N/A	%f	NUMBER	-1	1	Boresight position in camera reference frame V axis
2964	trc_boresight_table	bs_fpi_bs_crf_axis_w	FLOAT8	N/A	%f	NUMBER	-1	1	Boresight position in camera reference frame W axis
2965	trc_boresight_table	bs_fpi_bs_irf_status	INT4	N/A	%d	ENUM	0	1	status of FPI boresight position information given by inertial reference frame coordinates(0: NOT_VALID), (1: VALID),
2966	trc_boresight_table	bs_fpi_bs_irf_axis_u	FLOAT8	N/A	%f	NUMBER	-1	1	Boresight position in inertial reference frame U axis
2967	trc_boresight_table	bs_fpi_bs_irf_axis_v	FLOAT8	N/A	%f	NUMBER	-1	1	Boresight position in inertial reference frame V axis
2968	trc_boresight_table	bs_fpi_bs_irf_axis_w	FLOAT8	N/A	%f	NUMBER	-1	1	Boresight position in inertial reference frame W axis
2969	trc_boresight_table	bs_fpi_image_snr	UINT4	N/A	%u	NUMBER	0	39999	identity of the image referring to the boresight data
2970	trc_tracking_table								contains information used during centroid and limb tracking
2971	trc_tracking_table	packet	BINARY	N/A	%s	NUMBER			data packet as it was received from the TA
2972	trc_tracking_table	pkt_timestamp	TIME8	seconds	%d.%09d	NUMBER	0	2147483647	time data packet was constructed by TA
2973	trc_tracking_table	timestamp	TIME8	seconds	%d.%09d	NUMBER	0	2147483647	time at which the event happened or was captured
2974	trc_tracking_table	table_id	UINT4	N/A	%u	NUMBER	0	4294967295	ID of the current table
2975	trc_tracking_table	track_status	UINT4	N/A	%u	ENUM	0	1	current status of the Two_Axis_Position_Calculator(0: OFF), (1: ON),
2976	trc_tracking_table	head_scheme_axis_mode	UINT4	N/A	%u	ENUM	0	1	current tracking axis mode(0: ON_AXIS), (1: OFFSET),
2977	trc_tracking_table	head_scheme_obj_mode	UINT4	N/A	%u	ENUM	0	1	current tracking object mode(0: CENTROID), (1: LIMB),
2978	trc_tracking_table	head_scheme_boresight	UINT4	N/A	%u	ENUM	0	1	current tracking boresight mode(0: DISABLED), (1: ENABLED),
2979	trc_tracking_table	head_scheme_inertial	UINT4	N/A	%u	ENUM	0	1	current tracking inertial mode(0: DISABLED), (1: ENABLED),
2980	trc_tracking_table	head_ts_time	TIME8	seconds	%d.%09d	NUMBER	0	2147483647	timestamp for last change of header block
2981	trc_tracking_table	cent_ref_track_aoi	UINT4	N/A	%u	NUMBER	0	8	identity of AOI containing tracking star
2982	trc_tracking_table	cent_ref_track_aoi_snr	UINT4	N/A	%u	NUMBER	0	999	serial number of the AOI used for tracking (at start of tracking)
2983	trc_tracking_table	cent_ref_track_camera	UINT4	N/A	%u	ENUM	0	2	identity of the camera used for tracking (according to tracking AOI)(0: WFI), (1: FFI), (2: FPI),

	A	B	C	D	E	F	G	H	I
2984	trc_tracking_table	cent_ref_track_bs_snr	UINT4	N/A	%u	NUMBER	0	999	serial number of the boresight position used as tracking position
2985	trc_tracking_table	cent_ref_pos_tarf_axis_u	FLOAT8	N/A	%f	NUMBER	-1	1	tracking position in TARF U axis
2986	trc_tracking_table	cent_ref_pos_tarf_axis_v	FLOAT8	N/A	%f	NUMBER	-1	1	tracking position in TARF V axis
2987	trc_tracking_table	cent_ref_pos_tarf_axis_w	FLOAT8	N/A	%f	NUMBER	-1	1	tracking position in TARF W axis
2988	trc_tracking_table	cent_ref_image_snr	UINT4	N/A	%u	NUMBER	0	39999	serial number of the image used for calculation of tracking position
2989	trc_tracking_table	cent_ref_offset_quat	UQUAT32	N/A	%lf	NUMBER	-1	1	tracking offset quaternion describing the position of the IR star relative to the tracking star in IRF
2990	trc_tracking_table	cent_ref_aqu_limit	FLOAT4	arcseconds	%f	NUMBER	0	60	acquisition limit used by tracking algorithm
2991	trc_tracking_table	cent_ref_drift_limit	FLOAT4	arcseconds	%f	NUMBER	0	60	drift limit used by tracking algorithm
2992	trc_tracking_table	cent_work_seq_snr	UINT4	N/A	%u	NUMBER	0	999	serial number of current tracking sequence
2993	trc_tracking_table	cent_work_seq_phase	UINT4	N/A	%u	ENUM	0	7	describes current phase of tracking algorithm(0: IDLE), (1: MOVE), (2: MOVE_CORRECT), (3: INERTIAL_LOOP), (4: TRAJECT_EST), (5: NON_INERT_LOOP), (6: MOVE_TWEAK), (7: MOVE_LOS_LIMIT),
2994	trc_tracking_table	cent_work_ts_seq_tv	TIME8	seconds	%d.%09d	NUMBER	0	2147483647	timestamp for start of current tracking sequence
2995	trc_tracking_table	cent_work_image_snr	UINT4	N/A	%u	NUMBER	0	39999	identity of the image referring to the given centroid data
2996	trc_tracking_table	cent_work_exp_time	INT4	milliseconds	%d	NUMBER	10	10000	duration of exposure period
2997	trc_tracking_table	cent_work_exp_cent_time	TIME8	seconds	%d.%09d	NUMBER	0	2147483647	timestamp for center of exposure period
2998	trc_tracking_table	cent_work_cent_irf_axis_u	FLOAT8	N/A	%f	NUMBER	-1	1	calculated centroid data, transformed into the U axis of the IRF
2999	trc_tracking_table	cent_work_cent_irf_axis_v	FLOAT8	N/A	%f	NUMBER	-1	1	calculated centroid data, transformed into the V axis of the IRF
3000	trc_tracking_table	cent_work_cent_irf_axis_w	FLOAT8	N/A	%f	NUMBER	-1	1	calculated centroid data, transformed into the W axis of the IRF
3001	trc_tracking_table	cent_work_cent_tarf_axis_u	FLOAT8	N/A	%f	NUMBER	-1	1	calculated centroid data, transformed into the U axis of the TARF
3002	trc_tracking_table	cent_work_cent_tarf_axis_v	FLOAT8	N/A	%f	NUMBER	-1	1	calculated centroid data, transformed into the V axis of the TARF
3003	trc_tracking_table	cent_work_cent_tarf_axis_w	FLOAT8	N/A	%f	NUMBER	-1	1	calculated centroid data, transformed into the W axis of the TARF
3004	trc_tracking_table	cent_work_cent_quality	FLOAT8	N/A	%lf	NUMBER	0	1	quality estimate of centroid calculation
3005	trc_tracking_table	cent_work_st_move_expo	UINT4	N/A	%u	ENUM	0	3	reports move status of telescope during image exposure(0: LOCKED), (1: SETTLED), (2: TRANSIENT), (3: NOT_READY),
3006	trc_tracking_table	cent_work_st_tsc_expo	UINT4	N/A	%u	ENUM	0	5	reports TASCU move status during image exposure(0: ACTIVE), (1: MOTION_PROG_TRACK), (2: MOTION_SLEW), (3: MOTION_POS_REL), (4: MOTION_POS_ABS), (5: NOT_READY),
3007	trc_tracking_table	cent_work_fd_cmd_att_quat	UQUAT32	N/A	%lf	NUMBER	-1	1	commanded attitude of TARF w.r.t. IRF in quaternion representation
3008	trc_tracking_table	cent_work_fd_act_att_quat	UQUAT32	N/A	%lf	NUMBER	-1	1	actual attitude of TARF w.r.t. IRF in quaternion representation
3009	trc_tracking_table	cent_work_pixel_format	INT4	N/A	%d	ENUM	0	1	pixel format of image data used for centroid calculation(0: 8_BIT), (1: 14_BIT),
3010	trc_tracking_table	cent_work_pixel_grouping	INT4	N/A	%d	ENUM	0	2	pixel grouping of image used for centroid calculation(0: 1x1), (1: 2x2), (2: 4x4),

	A	B	C	D	E	F	G	H	I
3011	trc_tracking_table	cent_work_filter_pos	INT4	N/A	%d	ENUM	-1	6	filter position(-1: UNDEFINED), (0: HOME), (1: CLOSED), (2: FILTER_1), (3: FILTER_2), (4: FILTER_3), (5: FILTER_4), (6: FILTER_5),
3012	trc_tracking_table	cent_work_focus_pos	FLOAT8	millimeters	%lf	NUMBER	0	600	focus position (only valid for FPI)
3013	trc_tracking_table	cent_cmd_head_id	UINT2	N/A	%u	ENUM	10010	12002	ID of the command sent to the TASCU(10010: TSC_FD_TRC_OFFSET), (12001: TSC_ATC_CORR_POS), (12002: TSC_ATC_TRAJ_EST),
3014	trc_tracking_table	cent_cmd_head_version	UINT2	N/A	%u	NUMBER	0	65535	Version of the command sent to the TASCU
3015	trc_tracking_table	cent_cmd_atc_des_pos_quat	UQUAT32	N/A	%lf	NUMBER	-1	1	deviation attitude quaternion with regard to TARF used in the command sent to the TASCU
3016	trc_tracking_table	cent_cmd_drift_quality_index	FLOAT4	N/A	%lf	NUMBER	0	1	noise on deviation measurement argument used in the command sent to the TASCU
3017	trc_tracking_table	cent_cmd_drift_imager_index	FLOAT4	N/A	%lf	NUMBER	0	1	accuracy of imager in use argument used in the command sent to the TASCU
3018	trc_tracking_table	cent_cmd_atc_des_traj_est	UINT1	N/A	%u	ENUM	1	5	trajectory estimation algorithm used in the command sent to the TASCU(1: RESET_EL_XEL), (2: RESET_LOS), (3: CONT_EL_XEL), (4: CONT_LOS), (5: NO_DRIFT),
3019	trc_tracking_table	cent_cmd_traj_time	TIME8	seconds	%d.%09d	NUMBER	0	2147483647	time at center of image exposure used in the command sent to the TASCU
3020	trc_tracking_table	cent_cmd_traj_expo_time	UINT2	milliseconds	%u	NUMBER	10	10000	duration of image exposure used in the command sent to the TASCU
3021	trc_tracking_table	cent_cmd_empty	UINT1	N/A	%u	NUMBER	0	255	this is an empty placeholder byte
3022	trc_tracking_table	cent_work_ts_msg_tascu_tv	TIME8	seconds	%d.%09d	NUMBER	0	2147483647	timestamp for sending the message TASCU_CMD
3023	trc_tracking_table	limb_ref_track_limb1_aoi	UINT4	N/A	%u	NUMBER	0	8	identity of AOI containing limb 1
3024	trc_tracking_table	limb_ref_track_limb2_aoi	UINT4	N/A	%u	NUMBER	0	8	identity of AOI containing limb 2
3025	trc_tracking_table	limb_ref_track_limb1_aoi_snr	UINT4	N/A	%u	NUMBER	0	999	serial number of the AOI used for limb 1 (at start of tracking)
3026	trc_tracking_table	limb_ref_track_limb2_aoi_snr	UINT4	N/A	%u	NUMBER	0	999	serial number of the AOI used for limb 2 (at start of tracking)
3027	trc_tracking_table	limb_ref_track_camera	UINT4	N/A	%u	ENUM	0	2	identity of the camera used for tracking (according to tracking AOIs)(0: WFI), (1: FFI), (2: FPI),
3028	trc_tracking_table	limb_ref_limb1_tarf_axis_u	FLOAT8	N/A	%f	NUMBER	-1	1	limb tracking position 1 in TARF U axis
3029	trc_tracking_table	limb_ref_limb1_tarf_axis_v	FLOAT8	N/A	%f	NUMBER	-1	1	limb tracking position 1 in TARF V axis
3030	trc_tracking_table	limb_ref_limb1_tarf_axis_w	FLOAT8	N/A	%f	NUMBER	-1	1	limb tracking position 1 in TARF W axis
3031	trc_tracking_table	limb_ref_limb2_tarf_axis_u	FLOAT8	N/A	%f	NUMBER	-1	1	limb tracking position 2 in TARF U axis
3032	trc_tracking_table	limb_ref_limb2_tarf_axis_v	FLOAT8	N/A	%f	NUMBER	-1	1	limb tracking position 2 in TARF V axis
3033	trc_tracking_table	limb_ref_limb2_tarf_axis_w	FLOAT8	N/A	%f	NUMBER	-1	1	limb tracking position 2 in TARF W axis
3034	trc_tracking_table	limb_ref_track_image_snr	UINT4	N/A	%u	NUMBER	0	39999	serial number of the image, used for calculation of reference positions
3035	trc_tracking_table	limb_ref_track_aqu_limit	FLOAT4	arcseconds	%f	NUMBER	0	100	acquisition limit used by tracking algorithm
3036	trc_tracking_table	limb_ref_track_drift_limit	FLOAT4	arcseconds	%f	NUMBER	0	100	drift limit used by tracking algorithm

	A	B	C	D	E	F	G	H	I
3037	trc_tracking_table	limb_work_head_track_seq_snr	UINT4	N/A	%u	NUMBER	0	999	serial number of current tracking sequence
3038	trc_tracking_table	limb_work_head_seq_phase	UINT4	N/A	%u	ENUM	0	7	describes current phase of tracking algorithm(0: IDLE), (1: MOVE), (2: MOVE_CORRECT), (3: INERTIAL_LOOP), (4: TRAJECT_EST), (5: NON_INERT_LOOP), (6: MOVE_TWEAK), (7: MOVE_LOS_LIMIT),
3039	trc_tracking_table	limb_work_head_seq_time	TIME8	seconds	%d.%09d	NUMBER	0	2147483647	timestamp for start of current tracking sequence
3040	trc_tracking_table	limb_work_head_image_snr	UINT4	N/A	%u	NUMBER	0	39999	identity of the image referring to the given limb data
3041	trc_tracking_table	limb_work_head_exp_time	INT4	milliseconds	%d	NUMBER	10	10000	duration of exposure period
3042	trc_tracking_table	limb_work_head_exp_cent_time	TIME8	seconds	%d.%09d	NUMBER	0	2147483647	timestamp for center of exposure period
3043	trc_tracking_table	limb_work_limb1_tarf_pc_a	FLOAT4	N/A	%f	NUMBER	TBD	TBD	parameter describing parabolic shape for limb 1 fitting in coordinates of TARF
3044	trc_tracking_table	limb_work_limb1_tarf_pc_b	FLOAT4	N/A	%f	NUMBER	TBD	TBD	parameter describing parabolic shape for limb 1 fitting in coordinates of TARF
3045	trc_tracking_table	limb_work_limb1_tarf_pc_c	FLOAT4	N/A	%f	NUMBER	TBD	TBD	parameter describing parabolic shape for limb 1 fitting in coordinates of TARF
3046	trc_tracking_table	limb_work_limb1_tarf_type	UINT4	N/A	%u	ENUM	0	1	parameter describing parabolic shape for limb 1 fitting in coordinates of TARF(0: U=F(V)), (1: V=F(U)),
3047	trc_tracking_table	limb_work_limb1_tarf_start_u	FLOAT4	N/A	%f	NUMBER	TBD	TBD	parameter describing parabolic shape for limb 1 fitting in coordinates of TARF
3048	trc_tracking_table	limb_work_limb1_tarf_start_v	FLOAT4	N/A	%f	NUMBER	TBD	TBD	parameter describing parabolic shape for limb 1 fitting in coordinates of TARF
3049	trc_tracking_table	limb_work_limb1_tarf_stop_u	FLOAT4	N/A	%f	NUMBER	TBD	TBD	parameter describing parabolic shape for limb 1 fitting in coordinates of TARF
3050	trc_tracking_table	limb_work_limb1_tarf_stop_v	FLOAT4	N/A	%f	NUMBER	TBD	TBD	parameter describing parabolic shape for limb 1 fitting in coordinates of TARF
3051	trc_tracking_table	limb_work_limb1_tarf_lc_num	INT4	N/A	%d	NUMBER	TBD	TBD	parameter describing parabolic shape for limb 1 fitting in coordinates of TARF
3052	trc_tracking_table	limb_work_limb1_tarf_pc_d	FLOAT4	N/A	%f	NUMBER	TBD	TBD	parameter describing parabolic shape for limb 1 fitting in coordinates of TARF
3053	trc_tracking_table	limb_work_limb1_tarf_pc_e	FLOAT4	N/A	%f	NUMBER	TBD	TBD	parameter describing parabolic shape for limb 1 fitting in coordinates of TARF
3054	trc_tracking_table	limb_work_limb2_tarf_pc_a	FLOAT4	N/A	%f	NUMBER	TBD	TBD	parameter describing parabolic shape for limb 2 fitting in coordinates of TARF
3055	trc_tracking_table	limb_work_limb2_tarf_pc_b	FLOAT4	N/A	%f	NUMBER	TBD	TBD	parameter describing parabolic shape for limb 2 fitting in coordinates of TARF
3056	trc_tracking_table	limb_work_limb2_tarf_pc_c	FLOAT4	N/A	%f	NUMBER	TBD	TBD	parameter describing parabolic shape for limb 2 fitting in coordinates of TARF
3057	trc_tracking_table	limb_work_limb2_tarf_type	UINT4	N/A	%u	ENUM	0	1	parameter describing parabolic shape for limb 2 fitting in coordinates of TARF(0: U=F(V)), (1: V=F(U)),
3058	trc_tracking_table	limb_work_limb2_tarf_start_u	FLOAT4	N/A	%f	NUMBER	TBD	TBD	parameter describing parabolic shape for limb 2 fitting in coordinates of TARF
3059	trc_tracking_table	limb_work_limb2_tarf_start_v	FLOAT4	N/A	%f	NUMBER	TBD	TBD	parameter describing parabolic shape for limb 2 fitting in coordinates of TARF
3060	trc_tracking_table	limb_work_limb2_tarf_stop_u	FLOAT4	N/A	%f	NUMBER	TBD	TBD	parameter describing parabolic shape for limb 2 fitting in coordinates of TARF

	A	B	C	D	E	F	G	H	I
3061	trc_tracking_table	limb_work_limb2_tarf_stop_v	FLOAT4	N/A	%f	NUMBER	TBD	TBD	parameter describing parabolic shape for limb 2 fitting in coordinates of TARF
3062	trc_tracking_table	limb_work_limb2_tarf_lc_num	INT4	N/A	%d	NUMBER	TBD	TBD	parameter describing parabolic shape for limb 2 fitting in coordinates of TARF
3063	trc_tracking_table	limb_work_limb2_tarf_pc_d	FLOAT4	N/A	%f	NUMBER	TBD	TBD	parameter describing parabolic shape for limb 2 fitting in coordinates of TARF
3064	trc_tracking_table	limb_work_limb2_tarf_pc_e	FLOAT4	N/A	%f	NUMBER	TBD	TBD	parameter describing parabolic shape for limb 2 fitting in coordinates of TARF
3065	trc_tracking_table	limb_work_limb1_quality	FLOAT8	N/A	%lf	NUMBER	0	1	quality estimate of limb 1 calculation
3066	trc_tracking_table	limb_work_limb2_quality	FLOAT8	N/A	%lf	NUMBER	0	1	quality estimate of limb 2 calculation
3067	trc_tracking_table	limb_work_st_move_expo	UINT4	N/A	%u	ENUM	0	3	reports move status of telescope during image exposure(0: LOCKED), (1: SETTLED), (2: TRANSIENT), (3: NOT_READY),
3068	trc_tracking_table	limb_work_st_tsc_expo	UINT4	N/A	%u	ENUM	0	5	reports TASCU move status during image exposure(0: ACTIVE), (1: MOTION_PROG_TRACK), (2: MOTION_SLEW), (3: MOTION_POS_REL), (4: MOTION_POS_ABS), (5: NOT_READY),
3069	trc_tracking_table	limb_work_fd_cmd_att_quat	UQUAT32	N/A	%lf	NUMBER	-1	1	commanded attitude of TARF w.r.t. IRF in quaternion representation
3070	trc_tracking_table	limb_work_fd_act_att_quat	UQUAT32	N/A	%lf	NUMBER	-1	1	actual attitude of TARF w.r.t. IRF in quaternion representation
3071	trc_tracking_table	limb_work_pixel_format	INT4	N/A	%d	ENUM	0	1	pixel format of image data used for limb calculation(0: 8_BIT), (1: 14_BIT),
3072	trc_tracking_table	limb_work_pixel_grouping	INT4	N/A	%d	ENUM	0	2	pixel grouping of image used for limb calculation(0: 1x1), (1: 2x2), (2: 4x4),
3073	trc_tracking_table	limb_work_filter_pos	INT4	N/A	%d	ENUM	-1	6	filter position(-1: UNDEFINED), (0: HOME), (1: CLOSED), (2: FILTER_1), (3: FILTER_2), (4: FILTER_3), (5: FILTER_4), (6: FILTER_5),
3074	trc_tracking_table	limb_work_focus_pos	FLOAT8	millimeters	%lf	NUMBER	0	600	focus position (only valid for FPI)
3075	trc_tracking_table	limb_cmd_head_id	UINT2	N/A	%u	ENUM	10010	12002	ID of the command sent to the TASCU(10010: TSC_FD_TRC_OFFSET), (12001: TSC_ATC_CORR_POS), (12002: TSC_ATC_TRAJ_EST),
3076	trc_tracking_table	limb_cmd_head_version	UINT2	N/A	%u	NUMBER	0	65535	Version of the command sent to the TASCU
3077	trc_tracking_table	limb_cmd_atc_des_pos_quat	UQUAT32	N/A	%lf	NUMBER	-1	1	deviation attitude quaternion with regard to TARF used in the command sent to the TASCU
3078	trc_tracking_table	limb_cmd_drift_quality_index	FLOAT4	N/A	%lf	NUMBER	0	1	noise on deviation measurement argument used in the command sent to the TASCU
3079	trc_tracking_table	limb_cmd_drift_imager_index	FLOAT4	N/A	%lf	NUMBER	0	1	accuracy of imager in use argument used in the command sent to the TASCU
3080	trc_tracking_table	limb_cmd_atc_des_traj_est	UINT1	N/A	%u	ENUM	1	5	trajectory estimation algorithm used in the command sent to the TASCU(1: RESET_EL_XEL), (2: RESET_LOS), (3: CONT_EL_XEL), (4: CONT_LOS), (5: NO_DRIFT),
3081	trc_tracking_table	limb_cmd_traj_time	TIME8	seconds	%d.%09d	NUMBER	0	2147483647	time at center of image exposure used in the command sent to the TASCU
3082	trc_tracking_table	limb_cmd_traj_expo_time	UINT2	milliseconds	%u	NUMBER	10	10000	duration of image exposure used in the command sent to the TASCU
3083	trc_tracking_table	limb_cmd_empty	UINT1	N/A	%u	NUMBER	0	255	this is an empty placeholder byte
3084	trc_tracking_table	limb_work_ts_msg_tascu_tv	TIME8	seconds	%d.%09d	NUMBER	0	2147483647	timestamp for sending the message TASCU_CMD
3085	trc_rof_table								contains information necessary for ROF calculation
3086	trc_rof_table	packet	BINARY	N/A	%s	NUMBER			data packet as it was received from the TA

	A	B	C	D	E	F	G	H	I
3087	trc_rof_table	pkt_timestamp	TIME8	seconds	%d.%09d	NUMBER	0	2147483647	time data packet was constructed by TA
3088	trc_rof_table	timestamp	TIME8	seconds	%d.%09d	NUMBER	0	2147483647	time at which the event happened or was captured
3089	trc_rof_table	table_id	UINT4	N/A	%u	NUMBER	0	4294967295	ID of the current table
3090	trc_rof_table	head_status	UINT4	N/A	%u	ENUM	0	1	current status of the ROF_Calculator(0: OFF), (1: ON),
3091	trc_rof_table	head_ts_rof_select_tv	TIME8	seconds	%d.%09d	NUMBER	0	2147483647	timestamp for last change of header block
3092	trc_rof_table	ref_rof1_aoi	UINT4	N/A	%u	NUMBER	0	8	identity of AOI containing ROF 1 star
3093	trc_rof_table	ref_rof2_aoi	UINT4	N/A	%u	NUMBER	0	8	identity of AOI containing ROF 2 star
3094	trc_rof_table	ref_rof1_aoi_snr	UINT4	N/A	%u	NUMBER	0	999	serial number of the AOI used for ROF 1 star (at start of ROF calculation)
3095	trc_rof_table	ref_rof2_aoi_snr	UINT4	N/A	%u	NUMBER	0	999	serial number of the AOI used for ROF 2 star (at start of ROF calculation)
3096	trc_rof_table	ref_rof_camera	UINT4	N/A	%u	ENUM	0	2	identity of the camera used for ROF stars (according to ROF AOIs)(0: WFI), (1: FFI), (2: FPI),
3097	trc_rof_table	ref_rof1_ref_irf_axis_u	FLOAT8	N/A	%f	NUMBER	-1	1	reference position of ROF 1 star in IRF U axis
3098	trc_rof_table	ref_rof1_ref_irf_axis_v	FLOAT8	N/A	%f	NUMBER	-1	1	reference position of ROF 1 star in IRF V axis
3099	trc_rof_table	ref_rof1_ref_irf_axis_w	FLOAT8	N/A	%f	NUMBER	-1	1	reference position of ROF 1 star in IRF W axis
3100	trc_rof_table	ref_rof2_ref_irf_axis_u	FLOAT8	N/A	%f	NUMBER	-1	1	reference position of ROF 2 star in IRF U axis
3101	trc_rof_table	ref_rof2_ref_irf_axis_v	FLOAT8	N/A	%f	NUMBER	-1	1	reference position of ROF 2 star in IRF V axis
3102	trc_rof_table	ref_rof2_ref_irf_axis_w	FLOAT8	N/A	%f	NUMBER	-1	1	reference position of ROF 2 star in IRF W axis
3103	trc_rof_table	ref_rof1_ref_tarf_axis_u	FLOAT8	N/A	%f	NUMBER	-1	1	reference position of ROF 1 star in TARF U axis
3104	trc_rof_table	ref_rof1_ref_tarf_axis_v	FLOAT8	N/A	%f	NUMBER	-1	1	reference position of ROF 1 star in TARF V axis
3105	trc_rof_table	ref_rof1_ref_tarf_axis_w	FLOAT8	N/A	%f	NUMBER	-1	1	reference position of ROF 1 star in TARF W axis
3106	trc_rof_table	ref_rof2_ref_tarf_axis_u	FLOAT8	N/A	%f	NUMBER	-1	1	reference position of ROF 2 star in TARF U axis
3107	trc_rof_table	ref_rof2_ref_tarf_axis_v	FLOAT8	N/A	%f	NUMBER	-1	1	reference position of ROF 2 star in TARF V axis
3108	trc_rof_table	ref_rof2_ref_tarf_axis_w	FLOAT8	N/A	%f	NUMBER	-1	1	reference position of ROF 2 star in TARF W axis
3109	trc_rof_table	ref_rof_image_snr	UINT4	N/A	%u	NUMBER	0	39999	serial number of image used for calculation of the reference positions
3110	trc_rof_table	ref_rof_drift_limit	FLOAT4	arcseconds	%f	NUMBER	0	3600	drift limit used by ROF algorithm
3111	trc_rof_table	work_rof_head_seq_phase	UINT4	N/A	%u	ENUM	0	8	describes current phase of ROF algorithm(0: IDLE), (8: ROF_LOOP),
3112	trc_rof_table	work_rof_head_ts_seq_tv	TIME8	seconds	%d.%09d	NUMBER	0	2147483647	timestamp for start of current ROF sequence
3113	trc_rof_table	work_rof_head_image_snr	UINT4	N/A	%u	NUMBER	0	39999	identity of the image referring to the given ROF data
3114	trc_rof_table	work_rof_head_exp_time	INT4	milliseconds	%d	NUMBER	10	10000	duration of exposure period
3115	trc_rof_table	work_rof_head_exp_cent_time	TIME8	seconds	%d.%09d	NUMBER	0	2147483647	timestamp for center of exposure period
3116	trc_rof_table	work_rof1_irf_axis_u	FLOAT8	N/A	%f	NUMBER	-1	1	position of ROF 1 star in IRF U axis
3117	trc_rof_table	work_rof1_irf_axis_v	FLOAT8	N/A	%f	NUMBER	-1	1	position of ROF 1 star in IRF V axis
3118	trc_rof_table	work_rof1_irf_axis_w	FLOAT8	N/A	%f	NUMBER	-1	1	position of ROF 1 star in IRF W axis
3119	trc_rof_table	work_rof2_irf_axis_u	FLOAT8	N/A	%f	NUMBER	-1	1	position of ROF 2 star in IRF U axis
3120	trc_rof_table	work_rof2_irf_axis_v	FLOAT8	N/A	%f	NUMBER	-1	1	position of ROF 2 star in IRF V axis

	A	B	C	D	E	F	G	H	I
3121	trc_rof_table	work_rof2_irf_axis_w	FLOAT8	N/A	%f	NUMBER	-1	1	position of ROF 2 star in IRF W axis
3122	trc_rof_table	work_rof1_tarf_axis_u	FLOAT8	N/A	%f	NUMBER	-1	1	position of ROF 1 star in TARF U axis
3123	trc_rof_table	work_rof1_tarf_axis_v	FLOAT8	N/A	%f	NUMBER	-1	1	position of ROF 1 star in TARF V axis
3124	trc_rof_table	work_rof1_tarf_axis_w	FLOAT8	N/A	%f	NUMBER	-1	1	position of ROF 1 star in TARF W axis
3125	trc_rof_table	work_rof2_tarf_axis_u	FLOAT8	N/A	%f	NUMBER	-1	1	position of ROF 2 star in TARF U axis
3126	trc_rof_table	work_rof2_tarf_axis_v	FLOAT8	N/A	%f	NUMBER	-1	1	position of ROF 2 star in TARF V axis
3127	trc_rof_table	work_rof2_tarf_axis_w	FLOAT8	N/A	%f	NUMBER	-1	1	position of ROF 2 star in TARF W axis
3128	trc_rof_table	work_rof1_quality	FLOAT8	N/A	%lf	NUMBER	0	1	quality estimate of centroid calculation of ROF 1 star
3129	trc_rof_table	work_rof2_quality	FLOAT8	N/A	%lf	NUMBER	0	1	quality estimate of centroid calculation of ROF 2 star
3130	trc_rof_table	work_base_st_move_expo	UINT4	N/A	%u	ENUM	0	3	reports move status of telescope during image exposure(0: LOCKED), (1: SETTLED), (2: TRANSIENT), (3: NOT_READY),
3131	trc_rof_table	work_base_st_tascu_expo	UINT4	N/A	%u	ENUM	0	5	reports TASCU move status during image exposure(0: ACTIVE), (1: MOTION_PROG_TRACK), (2: MOTION_SLEW), (3: MOTION_POS_REL), (4: MOTION_POS_ABS), (5: NOT_READY),
3132	trc_rof_table	work_base_fd_cmd_att_quat	UQUAT32	N/A	%lf	NUMBER	-1	1	commanded attitude of TARF w.r.t. IRF in quaternion representation
3133	trc_rof_table	work_base_fd_act_att_quat	UQUAT32	N/A	%lf	NUMBER	-1	1	actual attitude of TARF w.r.t. IRF in quaternion representation
3134	trc_rof_table	work_base_pixel_format	INT4	N/A	%d	ENUM	0	1	pixel format of image data used for ROF calculation(0: 8_BIT), (1: 14_BIT),
3135	trc_rof_table	work_base_pixel_grouping	INT4	N/A	%d	ENUM	0	2	pixel grouping of image used for ROF calculation(0: 1x1), (1: 2x2), (2: 4x4),
3136	trc_rof_table	work_base_filter_pos	INT4	N/A	%d	ENUM	-1	6	filter position(-1: UNDEFINED), (0: HOME), (1: CLOSED), (2: FILTER_1), (3: FILTER_2), (4: FILTER_3), (5: FILTER_4), (6: FILTER_5),
3137	trc_rof_table	work_base_focus_pos	FLOAT8	millimeters	%lf	NUMBER	0	600	focus position (only valid for FPI)
3138	trc_rof_table	rof_cmd_head_id	UINT2	N/A	%u	ENUM	10010	12002	ID of the command sent to the TASCU(10010: TSC_FD_TRC_OFFSET), (12001: TSC_ATC_CORR_POS), (12002: TSC_ATC_TRAJ_EST),
3139	trc_rof_table	rof_cmd_head_version	UINT2	N/A	%u	NUMBER	0	65535	Version of the command sent to the TASCU
3140	trc_rof_table	rof_cmd_atc_des_pos_quat	UQUAT32	N/A	%lf	NUMBER	-1	1	correction attitude quaternion with regard to TARF used in the command sent to the TASCU
3141	trc_rof_table	rof_cmd_drift_quality_index	FLOAT4	N/A	%lf	NUMBER	0	1	quality of image evaluation argument used in the command sent to the TASCU
3142	trc_rof_table	rof_cmd_drift_imager_index	FLOAT4	N/A	%lf	NUMBER	0	1	accuracy of imager in use argument used in the command sent to the TASCU
3143	trc_rof_table	rof_cmd_atc_des_mode	UINT1	N/A	%u	ENUM	1	3	correction mode for the servo system to use in the command sent to the TASCU(1: IMMEDIATE), (2: ESTIMATE), (3: IMMEDIATE_ESTIMATE),
3144	trc_rof_table	rof_cmd_atc_des_drift_est	UINT1	N/A	%u	ENUM	1	5	gyro drift estimation algorithm used in the command sent to the TASCU(1: RESET_EL_XEL), (2: RESET_LOS), (3: CONT_EL_XEL), (4: CONT_LOS), (5: NO_DRIFT),
3145	trc_rof_table	rof_cmd_drift_time	TIME8	seconds	%d.%09d	NUMBER	0	2147483647	time at center of image exposure used in the command sent to the TASCU
3146	trc_rof_table	rof_cmd_drift_expo_time	UINT2	milliseconds	%u	NUMBER	10	10000	duration of image exposure used in the command sent to the TASCU
3147	trc_rof_table	work_base_ts_msg_tascu_tv	TIME8	seconds	%d.%09d	NUMBER	0	2147483647	timestamp for sending the message TASCU_CMD
3148	trc_nodding_table								contains the offset between the two nod positions and the desired tracking schemes for both nod positions

	A	B	C	D	E	F	G	H	I
3149	trc_nodding_table	packet	BINARY	N/A	%s	NUMBER			data packet as it was received from the TA
3150	trc_nodding_table	pkt_timestamp	TIME8	seconds	%d.%09d	NUMBER	0	2147483647	time data packet was constructed by TA
3151	trc_nodding_table	timestamp	TIME8	seconds	%d.%09d	NUMBER	0	2147483647	time at which the event happened or was captured
3152	trc_nodding_table	table_id	UINT4	N/A	%u	NUMBER	0	4294967295	ID of the current table
3153	trc_nodding_table	nod_offset_ab_quat	UQUAT32	N/A	%lf	NUMBER	-1	1	Offset from nod position A to B w.r.t. TARF in quaternion representation
3154	trc_nodding_table	nod_track_a_cmd	UINT4	N/A	%u	ENUM	1	4	contains mode handling command automatically used after nod from B to A(1: POSITIONING), (2: ON_AXIS), (3: OFFSET), (4: LIMB),
3155	trc_nodding_table	nod_track_a_coff_inert_enable	UINT4	N/A	%u	ENUM	0	1	contains the inertial enable argument for the ON_AXIS and OFFSET mode handling commands(0: NO), (1: YES),
3156	trc_nodding_table	nod_track_a_coff_bs_enable	UINT4	N/A	%u	ENUM	0	1	contains the boresight enable argument for the ON_AXIS and OFFSET mode handling commands(0: NO), (1: YES),
3157	trc_nodding_table	nod_track_a_coff_aoi_trc	UINT4	N/A	%u	NUMBER	1	8	contains the AOI track argument for the ON_AXIS and OFFSET mode handling commands
3158	trc_nodding_table	nod_track_a_coff_rel_irf_quat	UQUAT32	N/A	%lf	NUMBER	-1	1	contains the quaternion argument for the OFFSET mode handling command
3159	trc_nodding_table	nod_rof_a_status	UINT4	N/A	%u	ENUM	0	1	specifies status of ROF calculation(0: OFF), (1: ON),
3160	trc_nodding_table	nod_rof_a_aoi_rof_1	UINT4	N/A	%u	NUMBER	1	8	specifies AOI 1 for ROF calculation
3161	trc_nodding_table	nod_rof_a_aoi_rof_2	UINT4	N/A	%u	NUMBER	1	8	specifies AOI 2 for ROF calculation
3162	trc_nodding_table	nod_track_b_cmd	UINT4	N/A	%u	ENUM	1	4	contains mode handling command automatically used after nod from A to B(1: POSITIONING), (2: ON_AXIS), (3: OFFSET), (4: LIMB),
3163	trc_nodding_table	nod_track_b_coff_inert_enable	UINT4	N/A	%u	ENUM	0	1	contains the inertial enable argument for the ON_AXIS and OFFSET mode handling commands(0: NO), (1: YES),
3164	trc_nodding_table	nod_track_b_coff_bs_enable	UINT4	N/A	%u	ENUM	0	1	contains the boresight enable argument for the ON_AXIS and OFFSET mode handling commands(0: NO), (1: YES),
3165	trc_nodding_table	nod_track_b_coff_aoi_trc	UINT4	N/A	%u	NUMBER	1	8	contains the AOI track argument for the ON_AXIS and OFFSET mode handling commands
3166	trc_nodding_table	nod_track_b_coff_rel_irf_quat	UQUAT32	N/A	%lf	NUMBER	-1	1	contains the quaternion argument for the OFFSET mode handling command
3167	trc_nodding_table	nod_rof_b_status	UINT4	N/A	%u	ENUM	0	1	specifies status of ROF calculation(0: OFF), (1: ON),
3168	trc_nodding_table	nod_rof_b_aoi_rof_1	UINT4	N/A	%u	NUMBER	1	8	specifies AOI 1 for ROF calculation
3169	trc_nodding_table	nod_rof_b_aoi_rof_2	UINT4	N/A	%u	NUMBER	1	8	specifies AOI 2 for ROF calculation
3170	trc_nodding_table	ts_nod_def_tv	TIME8	seconds	%d.%09d	NUMBER	0	2147483647	timestamp for setting the nod data items
3171	trc_tascu_comm_table								reports the last command sent to the TASCU and the corresponding ack and answer messages
3172	trc_tascu_comm_table	packet	BINARY	N/A	%s	NUMBER			data packet as it was received from the TA
3173	trc_tascu_comm_table	pkt_timestamp	TIME8	seconds	%d.%09d	NUMBER	0	2147483647	time data packet was constructed by TA
3174	trc_tascu_comm_table	timestamp	TIME8	seconds	%d.%09d	NUMBER	0	2147483647	time at which the event happened or was captured
3175	trc_tascu_comm_table	table_id	UINT4	N/A	%u	NUMBER	0	4294967295	ID of the current table
3176	trc_tascu_comm_table	cmd_head_id	UINT2	N/A	%u	ENUM	10010	12002	specifies the last command sent to the TASCU(10010: TSC_FD_TRC_OFFSET), (12001: TSC_ATC_POS_CORR), (12002: TSC_ATC_TRAJ_EST),
3177	trc_tascu_comm_table	cmd_head_version	UINT2	N/A	%u	NUMBER	TBD	TBD	version of the last command sent to the TASCU

	A	B	C	D	E	F	G	H	I
3178	trc_tascu_comm_table	cmd_atc_des_pos_quat	UQUAT32	N/A	%lf	NUMBER	-1	1	quaternion argument from the last command sent
3179	trc_tascu_comm_table	cmd_drift_quality_index	FLOAT4	N/A	%f	NUMBER	0	1	drift quality index argument from the last command sent
3180	trc_tascu_comm_table	cmd_drift_imager_index	FLOAT4	N/A	%f	NUMBER	0	1	drift imager index argument from the last command sent
3181	trc_tascu_comm_table	cmd_atc_des_traj_est	UINT1	N/A	%u	ENUM	1	5	trajectory estimation algorithm used in the last command sent(1: RESET_EL_XEL), (2: RESET_LOS), (3: CONT_EL_XEL), (4: CONT_LOS), (5: NO_DRIFT),
3182	trc_tascu_comm_table	cmd_traj_time	TIME8	seconds	%d.%09d	NUMBER	0	2147483647	time at center of image exposure argument from the last command sent
3183	trc_tascu_comm_table	cmd_traj_expo_time	UINT2	N/A	%u	NUMBER	10	10000	duration of image exposure argument from the last command sent
3184	trc_tascu_comm_table	cmd_empty	UINT1	N/A	%u	NUMBER	0	255	this is an empty placeholder byte
3185	trc_tascu_comm_table	cmd_time	TIME8	seconds	%d.%09d	NUMBER	0	2147483647	timestamp for the last command sent
3186	trc_tascu_comm_table	cmd_source	UINT2	N/A	%u	ENUM	0	7	process/routine that generated the last command sent(0: NONE), (1: TAP_CALC), (2: ROF_CALC), (3: CMD_MTBS), (4: CMD_LOS_LIMIT), (5: CMD_NOD), (6: CMD_TWEAK), (7: OVERRIDE),
3187	trc_tascu_comm_table	cmd_size	UINT4	N/A	%u	NUMBER	TBD	TBD	size of the last command sent
3188	trc_tascu_comm_table	ack1_head_id	UINT2	N/A	%u	ENUM	4001	4001	first acknowledge message received from the TASCU(4001: TSC_CMD_ACK),
3189	trc_tascu_comm_table	ack1_head_version	UINT2	N/A	%u	NUMBER	TBD	TBD	version of the first acknowledge message received from the TASCU
3190	trc_tascu_comm_table	ack1_status	UINT2	N/A	%u	ENUM	4010	4012	status of the first acknowledge message received from the TASCU(4010: CMD_RECEIVED), (4011: CMD_ACCEPTED), (4012: SEQ_COUNT_CHG),
3191	trc_tascu_comm_table	ack1_timestamp	TIME8	seconds	%d.%09d	NUMBER	0	2147483647	timestamp for reception of first acknowledge message
3192	trc_tascu_comm_table	ack2_head_id	UINT2	N/A	%u	ENUM	4001	4001	second acknowledge message received from the TASCU(4001: TSC_CMD_ACK),
3193	trc_tascu_comm_table	ack2_head_version	UINT2	N/A	%u	NUMBER	TBD	TBD	version of the second acknowledge message received from the TASCU
3194	trc_tascu_comm_table	ack2_status	UINT2	N/A	%u	ENUM	4010	4012	status of the second acknowledge message received from the TASCU(4010: CMD_RECEIVED), (4011: CMD_ACCEPTED), (4012: SEQ_COUNT_CHG),
3195	trc_tascu_comm_table	ack2_timestamp	TIME8	seconds	%d.%09d	NUMBER	0	2147483647	timestamp for reception of second acknowledge message
3196	trc_tascu_comm_table	ans_head_id	UINT2	N/A	%u	NUMBER	TBD	TBD	answer message received from the TASCU
3197	trc_tascu_comm_table	ans_head_version	UINT2	N/A	%u	NUMBER	TBD	TBD	version of the answer message received from the TASCU
3198	trc_tascu_comm_table	ans_status	UINT2	N/A	%u	ENUM	4020	4027	status of the answer message received from the TASCU(4020: CMD_EXECUTED), (4021: CMD_ABORTED_MODE_CONFLICT), (4022: CMD_ABORTED_UNDEFINED_CMD), (4023: CMD_ABORTED_PARAM_COUNT), (4024: CMD_ABORTED_PARAM_RANGE), (4025: CMD_ABORTED_MOVE_CMD), (4026: CMD_ABORTED_EXECUTION_ERROR), (4027: CMD_ABORTED_INVALID_VERSION),
3199	trc_tascu_comm_table	ans_timestamp	TIME8	seconds	%d.%09d	NUMBER	0	2147483647	timestamp for reception of answer message
3200	wfi_img_hist_table								table containing information about the last 3 WFI images
3201	wfi_img_hist_table	packet	BINARY	N/A	%s	NUMBER			data packet as it was received from the TA
3202	wfi_img_hist_table	pkt_timestamp	TIME8	seconds	%d.%09d	NUMBER	0	2147483647	time data packet was constructed by TA

	A	B	C	D	E	F	G	H	I
3203	wfi_img_hist_table	timestamp	TIME8	seconds	%d.%09d	NUMBER	0	2147483647	time at which the event happened or was captured
3204	wfi_img_hist_table	table_id	UINT4	N/A	%u	NUMBER	0	4294967295	ID of the current table
3205	wfi_img_hist_table	wfi_0_image_snr	UINT4	N/A	%u	NUMBER	0	39999	serial number of the image
3206	wfi_img_hist_table	wfi_0_image_status	INT4	N/A	%d	ENUM	-1	2	reports current status of image(-1: UNDEFINED), (0: EXPO_STARTED), (1: TRANSFER_COMPLET), (2: VIDEO_OUT_COMPLET),
3207	wfi_img_hist_table	wfi_0_tranf_status	INT4	N/A	%d	ENUM	-1	2	indicates whether image is used for calculation or will be skipped because of timing conflict or incorrect size(-1: UNDEFINED), (0: OK), (1: SKIP_TIMING), (2: SKIP_SIZE),
3208	wfi_img_hist_table	wfi_0_video_status	INT4	N/A	%d	ENUM	-1	1	status of image transfer to MCCS(-1: UNDEFINED), (0: OK), (1: ABORTED),
3209	wfi_img_hist_table	wfi_0_image_use	UINT4	N/A	%u	ENUM	0	4	specifies usage of the image data(0: NONE), (1: MONITOR), (2: NORMAL), (3: DARK_ACQ), (4: TEST),
3210	wfi_img_hist_table	wfi_0_ts_exp_start_tv	TIME8	seconds	%d.%09d	NUMBER	0	2147483647	timestamp for start of image exposure
3211	wfi_img_hist_table	wfi_0_exp_time	INT4	milliseconds	%d	NUMBER	10	10000	duration of exposure period
3212	wfi_img_hist_table	wfi_0_ts_exp_center_tv	TIME8	seconds	%d.%09d	NUMBER	0	2147483647	timestamp for center of exposure period
3213	wfi_img_hist_table	wfi_0_pixel_grouping	INT4	N/A	%d	ENUM	0	2	kind of pixel grouping(0: 1x1), (1: 2x2), (2: 4x4),
3214	wfi_img_hist_table	wfi_0_pixel_format	INT4	N/A	%d	ENUM	0	1	kind of pixel format(0: 8_BIT), (1: 14_BIT),
3215	wfi_img_hist_table	wfi_0_filter_pos	INT4	N/A	%d	ENUM	-1	6	filter position(-1: UNDEFINED), (0: HOME), (1: CLOSED), (2: FILTER_1), (3: FILTER_2), (4: FILTER_3), (5: FILTER_4), (6: FILTER_5),
3216	wfi_img_hist_table	wfi_0_focus_pos	FLOAT8	millimeters	%lf	NUMBER	0	600	focus position (only valid for FPI)
3217	wfi_img_hist_table	wfi_0_focal_length	FLOAT4	millimeters	%f	NUMBER	100	100000	focal length of camera optics
3218	wfi_img_hist_table	wfi_0_reticle	FLOAT8	N/A	%lf	NUMBER	0	1	reticle brightness (only valid for FPI)
3219	wfi_img_hist_table	wfi_0_ts_tranf_end_tv	TIME8	seconds	%d.%09d	NUMBER	0	2147483647	timestamp for end of image data from camera controller
3220	wfi_img_hist_table	wfi_0_buffer_id	UINT4	N/A	%u	ENUM	0	2	buffer containing the image(0: A), (1: B), (2: C),
3221	wfi_img_hist_table	wfi_0_ts_vid_out_end_tv	TIME8	seconds	%d.%09d	NUMBER	0	2147483647	timestamp for end of transfer of video data to MCCS
3222	wfi_img_hist_table	wfi_0_stat_move_expo	UINT4	N/A	%u	ENUM	0	3	move status of TA during exposure period(0: LOCKED), (1: SETTLED), (2: TRANSIENT), (3: NOT_READY),
3223	wfi_img_hist_table	wfi_0_stat_tsc_expo	UINT4	N/A	%u	ENUM	0	6	error status of TASCU (ATC, FD) during exposure period(0: ACTIVE), (1: MOTION_PROG_TRACK), (2: MOTION_SLEW), (3: MOTION_POS_REL), (4: MOTION_POS_ABS), (5: NOT_READY), (6: TSC_DATA_MISSING),
3224	wfi_img_hist_table	wfi_0_fd_cmd_att_quat	UQUAT32	N/A	%lf	NUMBER	-1	1	quaternion expressing the commanded attitude of TARF w.r.t. IRF (from TASCU control loop) at the center of the exposure period
3225	wfi_img_hist_table	wfi_0_fd_act_att_quat	UQUAT32	N/A	%lf	NUMBER	-1	1	quaternion expressing the actual attitude of TARF w.r.t. IRF (from TASCU control loop) at the center of the exposure period
3226	wfi_img_hist_table	wfi_0_alig_tarf_quat	UQUAT32	N/A	%lf	NUMBER	-1	1	quaternion expressing the alignment of FPIMFRF w.r.t. TARF (as reported from TASCU) at the center of the exposure period
3227	wfi_img_hist_table	wfi_0_alig_simf_tarf_quat	UQUAT32	N/A	%lf	NUMBER	-1	1	quaternion expressing the alignment of SIMFRF w.r.t. TARF (as reported from TASCU) at the center of the exposure period

	A	B	C	D	E	F	G	H	I
3228	wfi_img_hist_table	wfi_0_grav_vect_tarf_el	FLOAT4	N/A	%f	NUMBER	TBD	TBD	acceleration in the direction of the TARF elevation axis (as reported from TASCU) at the center of the exposure period
3229	wfi_img_hist_table	wfi_0_grav_vect_tarf_xel	FLOAT4	N/A	%f	NUMBER	TBD	TBD	acceleration in the direction of the TARF cross elevation axis (as reported from TASCU) at the center of the exposure period
3230	wfi_img_hist_table	wfi_0_grav_vect_tarf_los	FLOAT4	N/A	%f	NUMBER	TBD	TBD	acceleration in the direction of the TARF line of sight axis (as reported from TASCU) at the center of the exposure period
3231	wfi_img_hist_table	wfi_0_alig_xyi_xyimf_quat	UQUAT32	N/A	%lf	NUMBER	-1	1	quaternion expressing the alignment of FPIRF w.r.t. FPIMFRF (from alignment_table)
3232	wfi_img_hist_table	wfi_0_alig_fpi_bend_quat	UQUAT32	N/A	%lf	NUMBER	-1	1	quaternion expressing alignment for compensation of FPI internal bending, respecting gravity vector and temperatures, at the center of the exposure period (only valid for FPI)
3233	wfi_img_hist_table	wfi_0_alig_iqc_quat	UQUAT32	N/A	%lf	NUMBER	-1	1	quaternion expressing alignment for compensation of the effect of an IQC on WFI and FFI at the center of the exposure period (only valid for WFI and FFI)
3234	wfi_img_hist_table	wfi_1_image_snr	UINT4	N/A	%u	NUMBER	0	39999	serial number of the image
3235	wfi_img_hist_table	wfi_1_image_status	INT4	N/A	%d	ENUM	-1	2	reports current status of image(-1: UNDEFINED), (0: EXPO_STARTED), (1: TRANSFER_COMPLET), (2: VIDEO_OUT_COMPLET),
3236	wfi_img_hist_table	wfi_1_tranf_status	INT4	N/A	%d	ENUM	-1	2	indicates whether image is used for calculation or will be skipped because of timing conflict or incorrect size(-1: UNDEFINED), (0: OK), (1: SKIP_TIMING), (2: SKIP_SIZE),
3237	wfi_img_hist_table	wfi_1_video_status	INT4	N/A	%d	ENUM	-1	1	status of image transfer to MCCS(-1: UNDEFINED), (0: OK), (1: ABORTED),
3238	wfi_img_hist_table	wfi_1_image_use	UINT4	N/A	%u	ENUM	0	4	specifies usage of the image data(0: NONE), (1: MONITOR), (2: NORMAL), (3: DARK_ACQ), (4: TEST),
3239	wfi_img_hist_table	wfi_1_ts_exp_start_tv	TIME8	seconds	%d.%09d	NUMBER	0	2147483647	timestamp for start of image exposure
3240	wfi_img_hist_table	wfi_1_exp_time	INT4	milliseconds	%d	NUMBER	10	10000	duration of exposure period
3241	wfi_img_hist_table	wfi_1_ts_exp_center_tv	TIME8	seconds	%d.%09d	NUMBER	0	2147483647	timestamp for center of exposure period
3242	wfi_img_hist_table	wfi_1_pixel_grouping	INT4	N/A	%d	ENUM	0	2	kind of pixel grouping(0: 1x1), (1: 2x2), (2: 4x4),
3243	wfi_img_hist_table	wfi_1_pixel_format	INT4	N/A	%d	ENUM	0	1	kind of pixel format(0: 8_BIT), (1: 14_BIT),
3244	wfi_img_hist_table	wfi_1_filter_pos	INT4	N/A	%d	ENUM	-1	6	filter position(-1: UNDEFINED), (0: HOME), (1: CLOSED), (2: FILTER_1), (3: FILTER_2), (4: FILTER_3), (5: FILTER_4), (6: FILTER_5),
3245	wfi_img_hist_table	wfi_1_focus_pos	FLOAT8	millimeters	%lf	NUMBER	0	600	focus position (only valid for FPI)
3246	wfi_img_hist_table	wfi_1_focal_length	FLOAT4	millimeters	%f	NUMBER	100	100000	focal length of camera optics
3247	wfi_img_hist_table	wfi_1_reticle	FLOAT8	N/A	%lf	NUMBER	0	1	reticle brightness (only valid for FPI)
3248	wfi_img_hist_table	wfi_1_ts_tranf_end_tv	TIME8	seconds	%d.%09d	NUMBER	0	2147483647	timestamp for end of image data from camera controller
3249	wfi_img_hist_table	wfi_1_buffer_id	UINT4	N/A	%u	ENUM	0	2	buffer containing the image(0: A), (1: B), (2: C),
3250	wfi_img_hist_table	wfi_1_ts_vid_out_end_tv	TIME8	seconds	%d.%09d	NUMBER	0	2147483647	timestamp for end of transfer of video data to MCCS
3251	wfi_img_hist_table	wfi_1_stat_move_expo	UINT4	N/A	%u	ENUM	0	3	move status of TA during exposure period(0: LOCKED), (1: SETTLED), (2: TRANSIENT), (3: NOT_READY),

	A	B	C	D	E	F	G	H	I
3252	wfi_img_hist_table	wfi_1_stat_tsc_expo	UINT4	N/A	%u	ENUM	0	6	error status of TASCU (ATC, FD) during exposure period(0: ACTIVE), (1: MOTION_PROG_TRACK), (2: MOTION_SLEW), (3: MOTION_POS_REL), (4: MOTION_POS_ABS), (5: NOT_READY), (6: TSC_DATA_MISSING),
3253	wfi_img_hist_table	wfi_1_fd_cmd_att_quat	UQUAT32	N/A	%lf	NUMBER	-1	1	quaternion expressing the commanded attitude of TARF w.r.t. IRF (from TASCU control loop) at the center of the exposure period
3254	wfi_img_hist_table	wfi_1_fd_act_att_quat	UQUAT32	N/A	%lf	NUMBER	-1	1	quaternion expressing the actual attitude of TARF w.r.t. IRF (from TASCU control loop) at the center of the exposure period
3255	wfi_img_hist_table	wfi_1_alig_tarf_quat	UQUAT32	N/A	%lf	NUMBER	-1	1	quaternion expressing the alignment of FPIMFRF w.r.t. TARF (as reported from TASCU) at the center of the exposure period
3256	wfi_img_hist_table	wfi_1_alig_simf_tarf_quat	UQUAT32	N/A	%lf	NUMBER	-1	1	quaternion expressing the alignment of SIMFRF w.r.t. TARF (as reported from TASCU) at the center of the exposure period
3257	wfi_img_hist_table	wfi_1_grav_vect_tarf_el	FLOAT4	N/A	%f	NUMBER	TBD	TBD	acceleration in the direction of the TARF elevation axis (as reported from TASCU) at the center of the exposure period
3258	wfi_img_hist_table	wfi_1_grav_vect_tarf_xel	FLOAT4	N/A	%f	NUMBER	TBD	TBD	acceleration in the direction of the TARF cross elevation axis (as reported from TASCU) at the center of the exposure period
3259	wfi_img_hist_table	wfi_1_grav_vect_tarf_los	FLOAT4	N/A	%f	NUMBER	TBD	TBD	acceleration in the direction of the TARF line of sight axis (as reported from TASCU) at the center of the exposure period
3260	wfi_img_hist_table	wfi_1_alig_xyi_xyimf_quat	UQUAT32	N/A	%lf	NUMBER	-1	1	quaternion expressing the alignment of FPIRF w.r.t. FPIMFRF (from alignment_table)
3261	wfi_img_hist_table	wfi_1_alig_fpi_bend_quat	UQUAT32	N/A	%lf	NUMBER	-1	1	quaternion expressing alignment for compensation of FPI internal bending, respecting gravity vector and temperatures, at the center of the exposure period (only valid for FPI)
3262	wfi_img_hist_table	wfi_1_alig_iqc_quat	UQUAT32	N/A	%lf	NUMBER	-1	1	quaternion expressing alignment for compensation of the effect of an IQC on WFI and FFI at the center of the exposure period (only valid for WFI and FFI)
3263	wfi_img_hist_table	wfi_2_image_snr	UINT4	N/A	%u	NUMBER	0	39999	serial number of the image
3264	wfi_img_hist_table	wfi_2_image_status	INT4	N/A	%d	ENUM	-1	2	reports current status of image(-1: UNDEFINED), (0: EXPO_STARTED), (1: TRANSFER_COMPLET), (2: VIDEO_OUT_COMPLET),
3265	wfi_img_hist_table	wfi_2_tranf_status	INT4	N/A	%d	ENUM	-1	2	indicates whether image is used for calculation or will be skipped because of timing conflict or incorrect size(-1: UNDEFINED), (0: OK), (1: SKIP_TIMING), (2: SKIP_SIZE),
3266	wfi_img_hist_table	wfi_2_video_status	INT4	N/A	%d	ENUM	-1	1	status of image transfer to MCCS(-1: UNDEFINED), (0: OK), (1: ABORTED),
3267	wfi_img_hist_table	wfi_2_image_use	UINT4	N/A	%u	ENUM	0	4	specifies usage of the image data(0: NONE), (1: MONITOR), (2: NORMAL), (3: DARK_ACQ), (4: TEST),
3268	wfi_img_hist_table	wfi_2_ts_exp_start_tv	TIME8	seconds	%d.%09d	NUMBER	0	2147483647	timestamp for start of image exposure
3269	wfi_img_hist_table	wfi_2_exp_time	INT4	milliseconds	%d	NUMBER	10	10000	duration of exposure period
3270	wfi_img_hist_table	wfi_2_ts_exp_center_tv	TIME8	seconds	%d.%09d	NUMBER	0	2147483647	timestamp for center of exposure period
3271	wfi_img_hist_table	wfi_2_pixel_grouping	INT4	N/A	%d	ENUM	0	2	kind of pixel grouping(0: 1x1), (1: 2x2), (2: 4x4),
3272	wfi_img_hist_table	wfi_2_pixel_format	INT4	N/A	%d	ENUM	0	1	kind of pixel format(0: 8_BIT), (1: 14_BIT),
3273	wfi_img_hist_table	wfi_2_filter_pos	INT4	N/A	%d	ENUM	-1	6	filter position(-1: UNDEFINED), (0: HOME), (1: CLOSED), (2: FILTER_1), (3: FILTER_2), (4: FILTER_3), (5: FILTER_4), (6: FILTER_5),
3274	wfi_img_hist_table	wfi_2_focus_pos	FLOAT8	millimeters	%lf	NUMBER	0	600	focus position (only valid for FPI)

	A	B	C	D	E	F	G	H	I
3275	wfi_img_hist_table	wfi_2_focal_length	FLOAT4	millimeters	%f	NUMBER	100	100000	focal length of camera optics
3276	wfi_img_hist_table	wfi_2_reticle	FLOAT8	N/A	%lf	NUMBER	0	1	reticle brightness (only valid for FPI)
3277	wfi_img_hist_table	wfi_2_ts_tranf_end_tv	TIME8	seconds	%d.%09d	NUMBER	0	2147483647	timestamp for end of image data from camera controller
3278	wfi_img_hist_table	wfi_2_buffer_id	UINT4	N/A	%u	ENUM	0	2	buffer containing the image(0: A), (1: B), (2: C),
3279	wfi_img_hist_table	wfi_2_ts_vid_out_end_tv	TIME8	seconds	%d.%09d	NUMBER	0	2147483647	timestamp for end of transfer of video data to MCCS
3280	wfi_img_hist_table	wfi_2_stat_move_expo	UINT4	N/A	%u	ENUM	0	3	move status of TA during exposure period(0: LOCKED), (1: SETTLED), (2: TRANSIENT), (3: NOT_READY),
3281	wfi_img_hist_table	wfi_2_stat_tsc_expo	UINT4	N/A	%u	ENUM	0	6	error status of TASCU (ATC, FD) during exposure period(0: ACTIVE), (1: MOTION_PROG_TRACK), (2: MOTION_SLEW), (3: MOTION_POS_REL), (4: MOTION_POS_ABS), (5: NOT_READY), (6: TSC_DATA_MISSING),
3282	wfi_img_hist_table	wfi_2_fd_cmd_att_quat	UQUAT32	N/A	%lf	NUMBER	-1	1	quaternion expressing the commanded attitude of TARF w.r.t. IRF (from TASCU control loop) at the center of the exposure period
3283	wfi_img_hist_table	wfi_2_fd_act_att_quat	UQUAT32	N/A	%lf	NUMBER	-1	1	quaternion expressing the actual attitude of TARF w.r.t. IRF (from TASCU control loop) at the center of the exposure period
3284	wfi_img_hist_table	wfi_2_alig_tarf_quat	UQUAT32	N/A	%lf	NUMBER	-1	1	quaternion expressing the alignment of FPIMFRF w.r.t. TARF (as reported from TASCU) at the center of the exposure period
3285	wfi_img_hist_table	wfi_2_alig_simf_tarf_quat	UQUAT32	N/A	%lf	NUMBER	-1	1	quaternion expressing the alignment of SIMFRF w.r.t. TARF (as reported from TASCU) at the center of the exposure period
3286	wfi_img_hist_table	wfi_2_grav_vect_tarf_el	FLOAT4	N/A	%f	NUMBER	TBD	TBD	acceleration in the direction of the TARF elevation axis (as reported from TASCU) at the center of the exposure period
3287	wfi_img_hist_table	wfi_2_grav_vect_tarf_xel	FLOAT4	N/A	%f	NUMBER	TBD	TBD	acceleration in the direction of the TARF cross elevation axis (as reported from TASCU) at the center of the exposure period
3288	wfi_img_hist_table	wfi_2_grav_vect_tarf_los	FLOAT4	N/A	%f	NUMBER	TBD	TBD	acceleration in the direction of the TARF line of sight axis (as reported from TASCU) at the center of the exposure period
3289	wfi_img_hist_table	wfi_2_alig_xyi_xyimf_quat	UQUAT32	N/A	%lf	NUMBER	-1	1	quaternion expressing the alignment of FPIRF w.r.t. FPIMFRF (from alignment_table)
3290	wfi_img_hist_table	wfi_2_alig_fpi_bend_quat	UQUAT32	N/A	%lf	NUMBER	-1	1	quaternion expressing alignment for compensation of FPI internal bending, respecting gravity vector and temperatures, at the center of the exposure period (only valid for FPI)
3291	wfi_img_hist_table	wfi_2_alig_iqc_quat	UQUAT32	N/A	%lf	NUMBER	-1	1	quaternion expressing alignment for compensation of the effect of an IQC on WFI and FFI at the center of the exposure period (only valid for WFI and FFI)
3292	ffi_img_hist_table								table containing information about the last 3 FFI images
3293	ffi_img_hist_table	packet	BINARY	N/A	%s	NUMBER			data packet as it was received from the TA
3294	ffi_img_hist_table	pkt_timestamp	TIME8	seconds	%d.%09d	NUMBER	0	2147483647	time data packet was constructed by TA
3295	ffi_img_hist_table	timestamp	TIME8	seconds	%d.%09d	NUMBER	0	2147483647	time at which the event happened or was captured
3296	ffi_img_hist_table	table_id	UINT4	N/A	%u	NUMBER	0	4294967295	ID of the current table
3297	ffi_img_hist_table	ffi_0_image_snr	UINT4	N/A	%u	NUMBER	0	39999	serial number of the image
3298	ffi_img_hist_table	ffi_0_image_status	INT4	N/A	%d	ENUM	-1	2	reports current status of image(-1: UNDEFINED), (0: EXPO_STARTED), (1: TRANSFER_COMPLET), (2: VIDEO_OUT_COMPLET),

	A	B	C	D	E	F	G	H	I
3299	ffi_img_hist_table	ffi_0_tranf_status	INT4	N/A	%d	ENUM	-1	2	indicates whether image is used for calculation or will be skipped because of timing conflict or incorrect size(-1: UNDEFINED), (0: OK), (1: SKIP_TIMING), (2: SKIP_SIZE),
3300	ffi_img_hist_table	ffi_0_video_status	INT4	N/A	%d	ENUM	-1	1	status of image transfer to MCCS(-1: UNDEFINED), (0: OK), (1: ABORTED),
3301	ffi_img_hist_table	ffi_0_image_use	UINT4	N/A	%u	ENUM	0	4	specifies usage of the image data(0: NONE), (1: MONITOR), (2: NORMAL), (3: DARK_ACQ), (4: TEST),
3302	ffi_img_hist_table	ffi_0_ts_exp_start_tv	TIME8	seconds	%d.%09d	NUMBER	0	2147483647	timestamp for start of image exposure
3303	ffi_img_hist_table	ffi_0_exp_time	INT4	milliseconds	%d	NUMBER	10	10000	duration of exposure period
3304	ffi_img_hist_table	ffi_0_ts_exp_center_tv	TIME8	seconds	%d.%09d	NUMBER	0	2147483647	timestamp for center of exposure period
3305	ffi_img_hist_table	ffi_0_pixel_grouping	INT4	N/A	%d	ENUM	0	2	kind of pixel grouping(0: 1x1), (1: 2x2), (2: 4x4),
3306	ffi_img_hist_table	ffi_0_pixel_format	INT4	N/A	%d	ENUM	0	1	kind of pixel format(0: 8_BIT), (1: 14_BIT),
3307	ffi_img_hist_table	ffi_0_filter_pos	INT4	N/A	%d	ENUM	-1	6	filter position(-1: UNDEFINED), (0: HOME), (1: CLOSED), (2: FILTER_1), (3: FILTER_2), (4: FILTER_3), (5: FILTER_4), (6: FILTER_5),
3308	ffi_img_hist_table	ffi_0_focus_pos	FLOAT8	millimeters	%lf	NUMBER	0	600	focus position (only valid for FPI)
3309	ffi_img_hist_table	ffi_0_focal_length	FLOAT4	millimeters	%f	NUMBER	100	100000	focal length of camera optics
3310	ffi_img_hist_table	ffi_0_reticle	FLOAT8	N/A	%lf	NUMBER	0	1	reticle brightness (only valid for FPI)
3311	ffi_img_hist_table	ffi_0_ts_tranf_end_tv	TIME8	seconds	%d.%09d	NUMBER	0	2147483647	timestamp for end of image data from camera controller
3312	ffi_img_hist_table	ffi_0_buffer_id	UINT4	N/A	%u	ENUM	0	2	buffer containing the image(0: A), (1: B), (2: C),
3313	ffi_img_hist_table	ffi_0_ts_vid_out_end_tv	TIME8	seconds	%d.%09d	NUMBER	0	2147483647	timestamp for end of transfer of video data to MCCS
3314	ffi_img_hist_table	ffi_0_stat_move_expo	UINT4	N/A	%u	ENUM	0	3	move status of TA during exposure period(0: LOCKED), (1: SETTLED), (2: TRANSIENT), (3: NOT_READY),
3315	ffi_img_hist_table	ffi_0_stat_tsc_expo	UINT4	N/A	%u	ENUM	0	6	error status of TASCU (ATC, FD) during exposure period(0: ACTIVE), (1: MOTION_PROG_TRACK), (2: MOTION_SLEW), (3: MOTION_POS_REL), (4: MOTION_POS_ABS), (5: NOT_READY), (6: TSC_DATA_MISSING),
3316	ffi_img_hist_table	ffi_0_fd_cmd_att_quat	UQUAT32	N/A	%lf	NUMBER	-1	1	quaternion expressing the commanded attitude of TARF w.r.t. IRF (from TASCU control loop) at the center of the exposure period
3317	ffi_img_hist_table	ffi_0_fd_act_att_quat	UQUAT32	N/A	%lf	NUMBER	-1	1	quaternion expressing the actual attitude of TARF w.r.t. IRF (from TASCU control loop) at the center of the exposure period
3318	ffi_img_hist_table	ffi_0_alig_tarf_quat	UQUAT32	N/A	%lf	NUMBER	-1	1	quaternion expressing the alignment of FPIMFRF w.r.t. TARF (as reported from TASCU) at the center of the exposure period
3319	ffi_img_hist_table	ffi_0_alig_simf_tarf_quat	UQUAT32	N/A	%lf	NUMBER	-1	1	quaternion expressing the alignment of SIMFRF w.r.t. TARF (as reported from TASCU) at the center of the exposure period
3320	ffi_img_hist_table	ffi_0_grav_vect_tarf_el	FLOAT4	N/A	%f	NUMBER	TBD	TBD	acceleration in the direction of the TARF elevation axis (as reported from TASCU) at the center of the exposure period
3321	ffi_img_hist_table	ffi_0_grav_vect_tarf_xel	FLOAT4	N/A	%f	NUMBER	TBD	TBD	acceleration in the direction of the TARF cross elevation axis (as reported from TASCU) at the center of the exposure period
3322	ffi_img_hist_table	ffi_0_grav_vect_tarf_los	FLOAT4	N/A	%f	NUMBER	TBD	TBD	acceleration in the direction of the TARF line of sight axis (as reported from TASCU) at the center of the exposure period
3323	ffi_img_hist_table	ffi_0_alig_xyi_xyimf_quat	UQUAT32	N/A	%lf	NUMBER	-1	1	quaternion expressing the alignment of FPIRF w.r.t. FPIMFRF (from alignment_table)

	A	B	C	D	E	F	G	H	I
3324	ffi_img_hist_table	ffi_0_alig_fpi_bend_quat	UQUAT32	N/A	%lf	NUMBER	-1	1	quaternion expressing alignment for compensation of FPI internal bending, respecting gravity vector and temperatures, at the center of the exposure period (only valid for FPI)
3325	ffi_img_hist_table	ffi_0_alig_iqc_quat	UQUAT32	N/A	%lf	NUMBER	-1	1	quaternion expressing alignment for compensation of the effect of an IQC on WFI and FFI at the center of the exposure period (only valid for WFI and FFI)
3326	ffi_img_hist_table	ffi_1_image_snr	UINT4	N/A	%u	NUMBER	0	39999	serial number of the image
3327	ffi_img_hist_table	ffi_1_image_status	INT4	N/A	%d	ENUM	-1	2	reports current status of image(-1: UNDEFINED), (0: EXPO_STARTED), (1: TRANSFER_COMPLET), (2: VIDEO_OUT_COMPLET),
3328	ffi_img_hist_table	ffi_1_tranf_status	INT4	N/A	%d	ENUM	-1	2	indicates whether image is used for calculation or will be skipped because of timing conflict or incorrect size(-1: UNDEFINED), (0: OK), (1: SKIP_TIMING), (2: SKIP_SIZE),
3329	ffi_img_hist_table	ffi_1_video_status	INT4	N/A	%d	ENUM	-1	1	status of image transfer to MCCS(-1: UNDEFINED), (0: OK), (1: ABORTED),
3330	ffi_img_hist_table	ffi_1_image_use	UINT4	N/A	%u	ENUM	0	4	specifies usage of the image data(0: NONE), (1: MONITOR), (2: NORMAL), (3: DARK_ACQ), (4: TEST),
3331	ffi_img_hist_table	ffi_1_ts_exp_start_tv	TIME8	seconds	%d.%09d	NUMBER	0	2147483647	timestamp for start of image exposure
3332	ffi_img_hist_table	ffi_1_exp_time	INT4	milliseconds	%d	NUMBER	10	10000	duration of exposure period
3333	ffi_img_hist_table	ffi_1_ts_exp_center_tv	TIME8	seconds	%d.%09d	NUMBER	0	2147483647	timestamp for center of exposure period
3334	ffi_img_hist_table	ffi_1_pixel_grouping	INT4	N/A	%d	ENUM	0	2	kind of pixel grouping(0: 1x1), (1: 2x2), (2: 4x4),
3335	ffi_img_hist_table	ffi_1_pixel_format	INT4	N/A	%d	ENUM	0	1	kind of pixel format(0: 8_BIT), (1: 14_BIT),
3336	ffi_img_hist_table	ffi_1_filter_pos	INT4	N/A	%d	ENUM	-1	6	filter position(-1: UNDEFINED), (0: HOME), (1: CLOSED), (2: FILTER_1), (3: FILTER_2), (4: FILTER_3), (5: FILTER_4), (6: FILTER_5),
3337	ffi_img_hist_table	ffi_1_focus_pos	FLOAT8	millimeters	%lf	NUMBER	0	600	focus position (only valid for FPI)
3338	ffi_img_hist_table	ffi_1_focal_length	FLOAT4	millimeters	%f	NUMBER	100	100000	focal length of camera optics
3339	ffi_img_hist_table	ffi_1_reticle	FLOAT8	N/A	%lf	NUMBER	0	1	reticle brightness (only valid for FPI)
3340	ffi_img_hist_table	ffi_1_ts_tranf_end_tv	TIME8	seconds	%d.%09d	NUMBER	0	2147483647	timestamp for end of image data from camera controller
3341	ffi_img_hist_table	ffi_1_buffer_id	UINT4	N/A	%u	ENUM	0	2	buffer containing the image(0: A), (1: B), (2: C),
3342	ffi_img_hist_table	ffi_1_ts_vid_out_end_tv	TIME8	seconds	%d.%09d	NUMBER	0	2147483647	timestamp for end of transfer of video data to MCCS
3343	ffi_img_hist_table	ffi_1_stat_move_expo	UINT4	N/A	%u	ENUM	0	3	move status of TA during exposure period(0: LOCKED), (1: SETTLED), (2: TRANSIENT), (3: NOT_READY),
3344	ffi_img_hist_table	ffi_1_stat_tsc_expo	UINT4	N/A	%u	ENUM	0	6	error status of TASCU (ATC, FD) during exposure period(0: ACTIVE), (1: MOTION_PROG_TRACK), (2: MOTION_SLEW), (3: MOTION_POS_REL), (4: MOTION_POS_ABS), (5: NOT_READY), (6: TSC_DATA_MISSING),
3345	ffi_img_hist_table	ffi_1_fd_cmd_att_quat	UQUAT32	N/A	%lf	NUMBER	-1	1	quaternion expressing the commanded attitude of TARF w.r.t. IRF (from TASCU control loop) at the center of the exposure period
3346	ffi_img_hist_table	ffi_1_fd_act_att_quat	UQUAT32	N/A	%lf	NUMBER	-1	1	quaternion expressing the actual attitude of TARF w.r.t. IRF (from TASCU control loop) at the center of the exposure period
3347	ffi_img_hist_table	ffi_1_alig_tarf_quat	UQUAT32	N/A	%lf	NUMBER	-1	1	quaternion expressing the alignment of FPIMFRF w.r.t. TARF (as reported from TASCU) at the center of the exposure period

	A	B	C	D	E	F	G	H	I
3348	ffi_img_hist_table	ffi_1_alig_simf_tarf_quat	UQUAT32	N/A	%lf	NUMBER	-1	1	quaternion expressing the alignment of SIMFRF w.r.t. TARF (as reported from TASCU) at the center of the exposure period
3349	ffi_img_hist_table	ffi_1_grav_vect_tarf_el	FLOAT4	N/A	%f	NUMBER	TBD	TBD	acceleration in the direction of the TARF elevation axis (as reported from TASCU) at the center of the exposure period
3350	ffi_img_hist_table	ffi_1_grav_vect_tarf_xel	FLOAT4	N/A	%f	NUMBER	TBD	TBD	acceleration in the direction of the TARF cross elevation axis (as reported from TASCU) at the center of the exposure period
3351	ffi_img_hist_table	ffi_1_grav_vect_tarf_los	FLOAT4	N/A	%f	NUMBER	TBD	TBD	acceleration in the direction of the TARF line of sight axis (as reported from TASCU) at the center of the exposure period
3352	ffi_img_hist_table	ffi_1_alig_xyi_xyimf_quat	UQUAT32	N/A	%lf	NUMBER	-1	1	quaternion expressing the alignment of FPIRF w.r.t. FPIMFRF (from alignment_table)
3353	ffi_img_hist_table	ffi_1_alig_fpi_bend_quat	UQUAT32	N/A	%lf	NUMBER	-1	1	quaternion expressing alignment for compensation of FPI internal bending, respecting gravity vector and temperatures, at the center of the exposure period (only valid for FPI)
3354	ffi_img_hist_table	ffi_1_alig_iqc_quat	UQUAT32	N/A	%lf	NUMBER	-1	1	quaternion expressing alignment for compensation of the effect of an IQC on WFI and FFI at the center of the exposure period (only valid for WFI and FFI)
3355	ffi_img_hist_table	ffi_2_image_snr	UINT4	N/A	%u	NUMBER	0	39999	serial number of the image
3356	ffi_img_hist_table	ffi_2_image_status	INT4	N/A	%d	ENUM	-1	2	reports current status of image(-1: UNDEFINED), (0: EXPO_STARTED), (1: TRANSFER_COMPLET), (2: VIDEO_OUT_COMPLET),
3357	ffi_img_hist_table	ffi_2_tranf_status	INT4	N/A	%d	ENUM	-1	2	indicates whether image is used for calculation or will be skipped because of timing conflict or incorrect size(-1: UNDEFINED), (0: OK), (1: SKIP_TIMING), (2: SKIP_SIZE),
3358	ffi_img_hist_table	ffi_2_video_status	INT4	N/A	%d	ENUM	-1	1	status of image transfer to MCCS(-1: UNDEFINED), (0: OK), (1: ABORTED),
3359	ffi_img_hist_table	ffi_2_image_use	UINT4	N/A	%u	ENUM	0	4	specifies usage of the image data(0: NONE), (1: MONITOR), (2: NORMAL), (3: DARK_ACQ), (4: TEST),
3360	ffi_img_hist_table	ffi_2_ts_exp_start_tv	TIME8	seconds	%d.%09d	NUMBER	0	2147483647	timestamp for start of image exposure
3361	ffi_img_hist_table	ffi_2_exp_time	INT4	milliseconds	%d	NUMBER	10	10000	duration of exposure period
3362	ffi_img_hist_table	ffi_2_ts_exp_center_tv	TIME8	seconds	%d.%09d	NUMBER	0	2147483647	timestamp for center of exposure period
3363	ffi_img_hist_table	ffi_2_pixel_grouping	INT4	N/A	%d	ENUM	0	2	kind of pixel grouping(0: 1x1), (1: 2x2), (2: 4x4),
3364	ffi_img_hist_table	ffi_2_pixel_format	INT4	N/A	%d	ENUM	0	1	kind of pixel format(0: 8_BIT), (1: 14_BIT),
3365	ffi_img_hist_table	ffi_2_filter_pos	INT4	N/A	%d	ENUM	-1	6	filter position(-1: UNDEFINED), (0: HOME), (1: CLOSED), (2: FILTER_1), (3: FILTER_2), (4: FILTER_3), (5: FILTER_4), (6: FILTER_5),
3366	ffi_img_hist_table	ffi_2_focus_pos	FLOAT8	millimeters	%lf	NUMBER	0	600	focus position (only valid for FPI)
3367	ffi_img_hist_table	ffi_2_focal_length	FLOAT4	millimeters	%f	NUMBER	100	100000	focal length of camera optics
3368	ffi_img_hist_table	ffi_2_reticle	FLOAT8	N/A	%lf	NUMBER	0	1	reticle brightness (only valid for FPI)
3369	ffi_img_hist_table	ffi_2_ts_tranf_end_tv	TIME8	seconds	%d.%09d	NUMBER	0	2147483647	timestamp for end of image data from camera controller
3370	ffi_img_hist_table	ffi_2_buffer_id	UINT4	N/A	%u	ENUM	0	2	buffer containing the image(0: A), (1: B), (2: C),
3371	ffi_img_hist_table	ffi_2_ts_vid_out_end_tv	TIME8	seconds	%d.%09d	NUMBER	0	2147483647	timestamp for end of transfer of video data to MCCS
3372	ffi_img_hist_table	ffi_2_stat_move_expo	UINT4	N/A	%u	ENUM	0	3	move status of TA during exposure period(0: LOCKED), (1: SETTLED), (2: TRANSIENT), (3: NOT_READY),

	A	B	C	D	E	F	G	H	I
3373	ffi_img_hist_table	ffi_2_stat_tsc_expo	UINT4	N/A	%u	ENUM	0	6	error status of TASCU (ATC, FD) during exposure period(0: ACTIVE), (1: MOTION_PROG_TRACK), (2: MOTION_SLEW), (3: MOTION_POS_REL), (4: MOTION_POS_ABS), (5: NOT_READY), (6: TSC_DATA_MISSING),
3374	ffi_img_hist_table	ffi_2_fd_cmd_att_quat	UQUAT32	N/A	%lf	NUMBER	-1	1	quaternion expressing the commanded attitude of TARF w.r.t. IRF (from TASCU control loop) at the center of the exposure period
3375	ffi_img_hist_table	ffi_2_fd_act_att_quat	UQUAT32	N/A	%lf	NUMBER	-1	1	quaternion expressing the actual attitude of TARF w.r.t. IRF (from TASCU control loop) at the center of the exposure period
3376	ffi_img_hist_table	ffi_2_alig_tarf_quat	UQUAT32	N/A	%lf	NUMBER	-1	1	quaternion expressing the alignment of FPIMFRF w.r.t. TARF (as reported from TASCU) at the center of the exposure period
3377	ffi_img_hist_table	ffi_2_alig_simf_tarf_quat	UQUAT32	N/A	%lf	NUMBER	-1	1	quaternion expressing the alignment of SIMFRF w.r.t. TARF (as reported from TASCU) at the center of the exposure period
3378	ffi_img_hist_table	ffi_2_grav_vect_tarf_el	FLOAT4	N/A	%f	NUMBER	TBD	TBD	acceleration in the direction of the TARF elevation axis (as reported from TASCU) at the center of the exposure period
3379	ffi_img_hist_table	ffi_2_grav_vect_tarf_xel	FLOAT4	N/A	%f	NUMBER	TBD	TBD	acceleration in the direction of the TARF cross elevation axis (as reported from TASCU) at the center of the exposure period
3380	ffi_img_hist_table	ffi_2_grav_vect_tarf_los	FLOAT4	N/A	%f	NUMBER	TBD	TBD	acceleration in the direction of the TARF line of sight axis (as reported from TASCU) at the center of the exposure period
3381	ffi_img_hist_table	ffi_2_alig_xyi_xyimf_quat	UQUAT32	N/A	%lf	NUMBER	-1	1	quaternion expressing the alignment of FPIRF w.r.t. FPIMFRF (from alignment_table)
3382	ffi_img_hist_table	ffi_2_alig_fpi_bend_quat	UQUAT32	N/A	%lf	NUMBER	-1	1	quaternion expressing alignment for compensation of FPI internal bending, respecting gravity vector and temperatures, at the center of the exposure period (only valid for FPI)
3383	ffi_img_hist_table	ffi_2_alig_iqc_quat	UQUAT32	N/A	%lf	NUMBER	-1	1	quaternion expressing alignment for compensation of the effect of an IQC on WFI and FFI at the center of the exposure period (only valid for WFI and FFI)
3384	fpi_img_hist_table								table containing information about the last 3 FPI images
3385	fpi_img_hist_table	packet	BINARY	N/A	%s	NUMBER			data packet as it was received from the TA
3386	fpi_img_hist_table	pkt_timestamp	TIME8	seconds	%d.%09d	NUMBER	0	2147483647	time data packet was constructed by TA
3387	fpi_img_hist_table	timestamp	TIME8	seconds	%d.%09d	NUMBER	0	2147483647	time at which the event happened or was captured
3388	fpi_img_hist_table	table_id	UINT4	N/A	%u	NUMBER	0	4294967295	ID of the current table
3389	fpi_img_hist_table	fpi_0_image_snr	UINT4	N/A	%u	NUMBER	0	39999	serial number of the image
3390	fpi_img_hist_table	fpi_0_image_status	INT4	N/A	%d	ENUM	-1	2	reports current status of image(-1: UNDEFINED), (0: EXPO_STARTED), (1: TRANSFER_COMPLET), (2: VIDEO_OUT_COMPLET),
3391	fpi_img_hist_table	fpi_0_tranf_status	INT4	N/A	%d	ENUM	-1	2	indicates whether image is used for calculation or will be skipped because of timing conflict or incorrect size(-1: UNDEFINED), (0: OK), (1: SKIP_TIMING), (2: SKIP_SIZE),
3392	fpi_img_hist_table	fpi_0_video_status	INT4	N/A	%d	ENUM	-1	1	status of image transfer to MCCS(-1: UNDEFINED), (0: OK), (1: ABORTED),
3393	fpi_img_hist_table	fpi_0_image_use	UINT4	N/A	%u	ENUM	0	4	specifies usage of the image data(0: NONE), (1: MONITOR), (2: NORMAL), (3: DARK_ACQ), (4: TEST),
3394	fpi_img_hist_table	fpi_0_ts_exp_start_tv	TIME8	seconds	%d.%09d	NUMBER	0	2147483647	timestamp for start of image exposure
3395	fpi_img_hist_table	fpi_0_exp_time	INT4	milliseconds	%d	NUMBER	10	10000	duration of exposure period
3396	fpi_img_hist_table	fpi_0_ts_exp_center_tv	TIME8	seconds	%d.%09d	NUMBER	0	2147483647	timestamp for center of exposure period

	A	B	C	D	E	F	G	H	I
3397	fpi_img_hist_table	fpi_0_pixel_grouping	INT4	N/A	%d	ENUM	0	2	kind of pixel grouping(0: 1x1), (1: 2x2), (2: 4x4),
3398	fpi_img_hist_table	fpi_0_pixel_format	INT4	N/A	%d	ENUM	0	1	kind of pixel format(0: 8_BIT), (1: 14_BIT),
3399	fpi_img_hist_table	fpi_0_filter_pos	INT4	N/A	%d	ENUM	-1	6	filter position(-1: UNDEFINED), (0: HOME), (1: CLOSED), (2: FILTER_1), (3: FILTER_2), (4: FILTER_3), (5: FILTER_4), (6: FILTER_5),
3400	fpi_img_hist_table	fpi_0_focus_pos	FLOAT8	millimeters	%lf	NUMBER	0	600	focus position (only valid for FPI)
3401	fpi_img_hist_table	fpi_0_focal_length	FLOAT4	millimeters	%f	NUMBER	100	100000	focal length of camera optics
3402	fpi_img_hist_table	fpi_0_reticle	FLOAT8	N/A	%lf	NUMBER	0	1	reticle brightness (only valid for FPI)
3403	fpi_img_hist_table	fpi_0_ts_tranf_end_tv	TIME8	seconds	%d.%09d	NUMBER	0	2147483647	timestamp for end of image data from camera controller
3404	fpi_img_hist_table	fpi_0_buffer_id	UINT4	N/A	%u	ENUM	0	2	buffer containing the image(0: A), (1: B), (2: C),
3405	fpi_img_hist_table	fpi_0_ts_vid_out_end_tv	TIME8	seconds	%d.%09d	NUMBER	0	2147483647	timestamp for end of transfer of video data to MCCS
3406	fpi_img_hist_table	fpi_0_stat_move_expo	UINT4	N/A	%u	ENUM	0	3	move status of TA during exposure period(0: LOCKED), (1: SETTLED), (2: TRANSIENT), (3: NOT_READY),
3407	fpi_img_hist_table	fpi_0_stat_tsc_expo	UINT4	N/A	%u	ENUM	0	6	error status of TASCU (ATC, FD) during exposure period(0: ACTIVE), (1: MOTION_PROG_TRACK), (2: MOTION_SLEW), (3: MOTION_POS_REL), (4: MOTION_POS_ABS), (5: NOT_READY), (6: TSC_DATA_MISSING),
3408	fpi_img_hist_table	fpi_0_fd_cmd_att_quat	UQUAT32	N/A	%lf	NUMBER	-1	1	quaternion expressing the commanded attitude of TARF w.r.t. IRF (from TASCU control loop) at the center of the exposure period
3409	fpi_img_hist_table	fpi_0_fd_act_att_quat	UQUAT32	N/A	%lf	NUMBER	-1	1	quaternion expressing the actual attitude of TARF w.r.t. IRF (from TASCU control loop) at the center of the exposure period
3410	fpi_img_hist_table	fpi_0_alig_tarf_quat	UQUAT32	N/A	%lf	NUMBER	-1	1	quaternion expressing the alignment of FPIMFRF w.r.t. TARF (as reported from TASCU) at the center of the exposure period
3411	fpi_img_hist_table	fpi_0_alig_simf_tarf_quat	UQUAT32	N/A	%lf	NUMBER	-1	1	quaternion expressing the alignment of SIMFRF w.r.t. TARF (as reported from TASCU) at the center of the exposure period
3412	fpi_img_hist_table	fpi_0_grav_vect_tarf_el	FLOAT4	N/A	%f	NUMBER	TBD	TBD	acceleration in the direction of the TARF elevation axis (as reported from TASCU) at the center of the exposure period
3413	fpi_img_hist_table	fpi_0_grav_vect_tarf_xel	FLOAT4	N/A	%f	NUMBER	TBD	TBD	acceleration in the direction of the TARF cross elevation axis (as reported from TASCU) at the center of the exposure period
3414	fpi_img_hist_table	fpi_0_grav_vect_tarf_los	FLOAT4	N/A	%f	NUMBER	TBD	TBD	acceleration in the direction of the TARF line of sight axis (as reported from TASCU) at the center of the exposure period
3415	fpi_img_hist_table	fpi_0_alig_xyi_xyimf_quat	UQUAT32	N/A	%lf	NUMBER	-1	1	quaternion expressing the alignment of FPIRF w.r.t. FPIMFRF (from alignment_table)
3416	fpi_img_hist_table	fpi_0_alig_fpi_bend_quat	UQUAT32	N/A	%lf	NUMBER	-1	1	quaternion expressing alignment for compensation of FPI internal bending, respecting gravity vector and temperatures, at the center of the exposure period (only valid for FPI)
3417	fpi_img_hist_table	fpi_0_alig_iqc_quat	UQUAT32	N/A	%lf	NUMBER	-1	1	quaternion expressing alignment for compensation of the effect of an IQC on WFI and FFI at the center of the exposure period (only valid for WFI and FFI)
3418	fpi_img_hist_table	fpi_1_image_snr	UINT4	N/A	%u	NUMBER	0	39999	serial number of the image
3419	fpi_img_hist_table	fpi_1_image_status	INT4	N/A	%d	ENUM	-1	2	reports current status of image(-1: UNDEFINED), (0: EXPO_STARTED), (1: TRANSFER_COMPLET), (2: VIDEO_OUT_COMPLET),
3420	fpi_img_hist_table	fpi_1_tranf_status	INT4	N/A	%d	ENUM	-1	2	indicates whether image is used for calculation or will be skipped because of timing conflict or incorrect size(-1: UNDEFINED), (0: OK), (1: SKIP_TIMING), (2: SKIP_SIZE),

	A	B	C	D	E	F	G	H	I
3421	fpi_img_hist_table	fpi_1_video_status	INT4	N/A	%d	ENUM	-1	1	status of image transfer to MCCS(-1: UNDEFINED), (0: OK), (1: ABORTED),
3422	fpi_img_hist_table	fpi_1_image_use	UINT4	N/A	%u	ENUM	0	4	specifies usage of the image data(0: NONE), (1: MONITOR), (2: NORMAL), (3: DARK_ACQ), (4: TEST),
3423	fpi_img_hist_table	fpi_1_ts_exp_start_tv	TIME8	seconds	%d.%09d	NUMBER	0	2147483647	timestamp for start of image exposure
3424	fpi_img_hist_table	fpi_1_exp_time	INT4	milliseconds	%d	NUMBER	10	10000	duration of exposure period
3425	fpi_img_hist_table	fpi_1_ts_exp_center_tv	TIME8	seconds	%d.%09d	NUMBER	0	2147483647	timestamp for center of exposure period
3426	fpi_img_hist_table	fpi_1_pixel_grouping	INT4	N/A	%d	ENUM	0	2	kind of pixel grouping(0: 1x1), (1: 2x2), (2: 4x4),
3427	fpi_img_hist_table	fpi_1_pixel_format	INT4	N/A	%d	ENUM	0	1	kind of pixel format(0: 8_BIT), (1: 14_BIT),
3428	fpi_img_hist_table	fpi_1_filter_pos	INT4	N/A	%d	ENUM	-1	6	filter position(-1: UNDEFINED), (0: HOME), (1: CLOSED), (2: FILTER_1), (3: FILTER_2), (4: FILTER_3), (5: FILTER_4), (6: FILTER_5),
3429	fpi_img_hist_table	fpi_1_focus_pos	FLOAT8	millimeters	%lf	NUMBER	0	600	focus position (only valid for FPI)
3430	fpi_img_hist_table	fpi_1_focal_length	FLOAT4	millimeters	%f	NUMBER	100	100000	focal length of camera optics
3431	fpi_img_hist_table	fpi_1_reticle	FLOAT8	N/A	%lf	NUMBER	0	1	reticle brightness (only valid for FPI)
3432	fpi_img_hist_table	fpi_1_ts_tranf_end_tv	TIME8	seconds	%d.%09d	NUMBER	0	2147483647	timestamp for end of image data from camera controller
3433	fpi_img_hist_table	fpi_1_buffer_id	UINT4	N/A	%u	ENUM	0	2	buffer containing the image(0: A), (1: B), (2: C),
3434	fpi_img_hist_table	fpi_1_ts_vid_out_end_tv	TIME8	seconds	%d.%09d	NUMBER	0	2147483647	timestamp for end of transfer of video data to MCCS
3435	fpi_img_hist_table	fpi_1_stat_move_expo	UINT4	N/A	%u	ENUM	0	3	move status of TA during exposure period(0: LOCKED), (1: SETTLED), (2: TRANSIENT), (3: NOT_READY),
3436	fpi_img_hist_table	fpi_1_stat_tsc_expo	UINT4	N/A	%u	ENUM	0	6	error status of TASCU (ATC, FD) during exposure period(0: ACTIVE), (1: MOTION_PROG_TRACK), (2: MOTION_SLEW), (3: MOTION_POS_REL), (4: MOTION_POS_ABS), (5: NOT_READY), (6: TSC_DATA_MISSING),
3437	fpi_img_hist_table	fpi_1_fd_cmd_att_quat	UQUAT32	N/A	%lf	NUMBER	-1	1	quaternion expressing the commanded attitude of TARF w.r.t. IRF (from TASCU control loop) at the center of the exposure period
3438	fpi_img_hist_table	fpi_1_fd_act_att_quat	UQUAT32	N/A	%lf	NUMBER	-1	1	quaternion expressing the actual attitude of TARF w.r.t. IRF (from TASCU control loop) at the center of the exposure period
3439	fpi_img_hist_table	fpi_1_alig_tarf_quat	UQUAT32	N/A	%lf	NUMBER	-1	1	quaternion expressing the alignment of FPIMFRF w.r.t. TARF (as reported from TASCU) at the center of the exposure period
3440	fpi_img_hist_table	fpi_1_alig_simf_tarf_quat	UQUAT32	N/A	%lf	NUMBER	-1	1	quaternion expressing the alignment of SIMFRF w.r.t. TARF (as reported from TASCU) at the center of the exposure period
3441	fpi_img_hist_table	fpi_1_grav_vect_tarf_el	FLOAT4	N/A	%f	NUMBER	TBD	TBD	acceleration in the direction of the TARF elevation axis (as reported from TASCU) at the center of the exposure period
3442	fpi_img_hist_table	fpi_1_grav_vect_tarf_xel	FLOAT4	N/A	%f	NUMBER	TBD	TBD	acceleration in the direction of the TARF cross elevation axis (as reported from TASCU) at the center of the exposure period
3443	fpi_img_hist_table	fpi_1_grav_vect_tarf_los	FLOAT4	N/A	%f	NUMBER	TBD	TBD	acceleration in the direction of the TARF line of sight axis (as reported from TASCU) at the center of the exposure period
3444	fpi_img_hist_table	fpi_1_alig_xyi_xyimf_quat	UQUAT32	N/A	%lf	NUMBER	-1	1	quaternion expressing the alignment of FPIRF w.r.t. FPIMFRF (from alignment_table)
3445	fpi_img_hist_table	fpi_1_alig_fpi_bend_quat	UQUAT32	N/A	%lf	NUMBER	-1	1	quaternion expressing alignment for compensation of FPI internal bending, respecting gravity vector and temperatures, at the center of the exposure period (only valid for FPI)

	A	B	C	D	E	F	G	H	I
3446	fpi_img_hist_table	fpi_1_alig_iqc_quat	UQUAT32	N/A	%lf	NUMBER	-1	1	quaternion expressing alignment for compensation of the effect of an IQC on WFI and FFI at the center of the exposure period (only valid for WFI and FFI)
3447	fpi_img_hist_table	fpi_2_image_snr	UINT4	N/A	%u	NUMBER	0	39999	serial number of the image
3448	fpi_img_hist_table	fpi_2_image_status	INT4	N/A	%d	ENUM	-1	2	reports current status of image(-1: UNDEFINED), (0: EXPO_STARTED), (1: TRANSFER_COMPLET), (2: VIDEO_OUT_COMPLET),
3449	fpi_img_hist_table	fpi_2_tranf_status	INT4	N/A	%d	ENUM	-1	2	indicates whether image is used for calculation or will be skipped because of timing conflict or incorrect size(-1: UNDEFINED), (0: OK), (1: SKIP_TIMING), (2: SKIP_SIZE),
3450	fpi_img_hist_table	fpi_2_video_status	INT4	N/A	%d	ENUM	-1	1	status of image transfer to MCCS(-1: UNDEFINED), (0: OK), (1: ABORTED),
3451	fpi_img_hist_table	fpi_2_image_use	UINT4	N/A	%u	ENUM	0	4	specifies usage of the image data(0: NONE), (1: MONITOR), (2: NORMAL), (3: DARK_ACQ), (4: TEST),
3452	fpi_img_hist_table	fpi_2_ts_exp_start_tv	TIME8	seconds	%d.%09d	NUMBER	0	2147483647	timestamp for start of image exposure
3453	fpi_img_hist_table	fpi_2_exp_time	INT4	milliseconds	%d	NUMBER	10	10000	duration of exposure period
3454	fpi_img_hist_table	fpi_2_ts_exp_center_tv	TIME8	seconds	%d.%09d	NUMBER	0	2147483647	timestamp for center of exposure period
3455	fpi_img_hist_table	fpi_2_pixel_grouping	INT4	N/A	%d	ENUM	0	2	kind of pixel grouping(0: 1x1), (1: 2x2), (2: 4x4),
3456	fpi_img_hist_table	fpi_2_pixel_format	INT4	N/A	%d	ENUM	0	1	kind of pixel format(0: 8_BIT), (1: 14_BIT),
3457	fpi_img_hist_table	fpi_2_filter_pos	INT4	N/A	%d	ENUM	-1	6	filter position(-1: UNDEFINED), (0: HOME), (1: CLOSED), (2: FILTER_1), (3: FILTER_2), (4: FILTER_3), (5: FILTER_4), (6: FILTER_5),
3458	fpi_img_hist_table	fpi_2_focus_pos	FLOAT8	millimeters	%lf	NUMBER	0	600	focus position (only valid for FPI)
3459	fpi_img_hist_table	fpi_2_focal_length	FLOAT4	millimeters	%f	NUMBER	100	100000	focal length of camera optics
3460	fpi_img_hist_table	fpi_2_reticle	FLOAT8	N/A	%lf	NUMBER	0	1	reticle brightness (only valid for FPI)
3461	fpi_img_hist_table	fpi_2_ts_tranf_end_tv	TIME8	seconds	%d.%09d	NUMBER	0	2147483647	timestamp for end of image data from camera controller
3462	fpi_img_hist_table	fpi_2_buffer_id	UINT4	N/A	%u	ENUM	0	2	buffer containing the image(0: A), (1: B), (2: C),
3463	fpi_img_hist_table	fpi_2_ts_vid_out_end_tv	TIME8	seconds	%d.%09d	NUMBER	0	2147483647	timestamp for end of transfer of video data to MCCS
3464	fpi_img_hist_table	fpi_2_stat_move_expo	UINT4	N/A	%u	ENUM	0	3	move status of TA during exposure period(0: LOCKED), (1: SETTLED), (2: TRANSIENT), (3: NOT_READY),
3465	fpi_img_hist_table	fpi_2_stat_tsc_expo	UINT4	N/A	%u	ENUM	0	6	error status of TASCU (ATC, FD) during exposure period(0: ACTIVE), (1: MOTION_PROG_TRACK), (2: MOTION_SLEW), (3: MOTION_POS_REL), (4: MOTION_POS_ABS), (5: NOT_READY), (6: TSC_DATA_MISSING),
3466	fpi_img_hist_table	fpi_2_fd_cmd_att_quat	UQUAT32	N/A	%lf	NUMBER	-1	1	quaternion expressing the commanded attitude of TARF w.r.t. IRF (from TASCU control loop) at the center of the exposure period
3467	fpi_img_hist_table	fpi_2_fd_act_att_quat	UQUAT32	N/A	%lf	NUMBER	-1	1	quaternion expressing the actual attitude of TARF w.r.t. IRF (from TASCU control loop) at the center of the exposure period
3468	fpi_img_hist_table	fpi_2_alig_tarf_quat	UQUAT32	N/A	%lf	NUMBER	-1	1	quaternion expressing the alignment of FPIMFRF w.r.t. TARF (as reported from TASCU) at the center of the exposure period
3469	fpi_img_hist_table	fpi_2_alig_simf_tarf_quat	UQUAT32	N/A	%lf	NUMBER	-1	1	quaternion expressing the alignment of SIMFRF w.r.t. TARF (as reported from TASCU) at the center of the exposure period
3470	fpi_img_hist_table	fpi_2_grav_vect_tarf_el	FLOAT4	N/A	%f	NUMBER	TBD	TBD	acceleration in the direction of the TARF elevation axis (as reported from TASCU) at the center of the exposure period

	A	B	C	D	E	F	G	H	I
3471	fpi_img_hist_table	fpi_2_grav_vect_tarf_xel	FLOAT4	N/A	%f	NUMBER	TBD	TBD	acceleration in the direction of the TARF cross elevation axis (as reported from TASCU) at the center of the exposure period
3472	fpi_img_hist_table	fpi_2_grav_vect_tarf_los	FLOAT4	N/A	%f	NUMBER	TBD	TBD	acceleration in the direction of the TARF line of sight axis (as reported from TASCU) at the center of the exposure period
3473	fpi_img_hist_table	fpi_2_alig_xyi_xyimf_quat	UQUAT32	N/A	%lf	NUMBER	-1	1	quaternion expressing the alignment of FPIRF w.r.t. FPIMFRF (from alignment_table)
3474	fpi_img_hist_table	fpi_2_alig_fpi_bend_quat	UQUAT32	N/A	%lf	NUMBER	-1	1	quaternion expressing alignment for compensation of FPI internal bending, respecting gravity vector and temperatures, at the center of the exposure period (only valid for FPI)
3475	fpi_img_hist_table	fpi_2_alig_iqc_quat	UQUAT32	N/A	%lf	NUMBER	-1	1	quaternion expressing alignment for compensation of the effect of an IQC on WFI and FFI at the center of the exposure period (only valid for WFI and FFI)
3476	trc_temperature_table								table containing housekeeping data (mainly temperatures) from the imager CAN controller
3477	trc_temperature_table	packet	BINARY	N/A	%s	NUMBER			data packet as it was received from the TA
3478	trc_temperature_table	pkt_timestamp	TIME8	seconds	%d.%09d	NUMBER	0	2147483647	time data packet was constructed by TA
3479	trc_temperature_table	timestamp	TIME8	seconds	%d.%09d	NUMBER	0	2147483647	time at which the event happened or was captured
3480	trc_temperature_table	table_id	UINT4	N/A	%u	NUMBER	0	4294967295	ID of the current table
3481	trc_temperature_table	temp_wfi_sensor1	FLOAT8	degrees Celsius	%lf	NUMBER	TBD	TBD	temperature from WFI PT100 sensor 1
3482	trc_temperature_table	temp_wfi_sensor2	FLOAT8	degrees Celsius	%lf	NUMBER	TBD	TBD	temperature from WFI PT100 sensor 2
3483	trc_temperature_table	temp_ffi_sensor1	FLOAT8	degrees Celsius	%lf	NUMBER	TBD	TBD	temperature from FFI PT100 sensor 1
3484	trc_temperature_table	temp_ffi_sensor2	FLOAT8	degrees Celsius	%lf	NUMBER	TBD	TBD	temperature from FFI PT100 sensor 2
3485	trc_temperature_table	temp_ffi_sensor3	FLOAT8	degrees Celsius	%lf	NUMBER	TBD	TBD	temperature from FFI PT100 sensor 3
3486	trc_temperature_table	temp_fpi_base	FLOAT8	degrees Celsius	%lf	NUMBER	TBD	TBD	base temperature of FPI
3487	trc_temperature_table	temp_fpi_motor	FLOAT8	degrees Celsius	%lf	NUMBER	TBD	TBD	temperature of FPI motor
3488	trc_temperature_table	temp_imager_time	TIME8	seconds	%d.%09d	NUMBER	0	2147483647	time imager temperature data was taken
3489	trc_temperature_table	temp_inf_t2	FLOAT8	degrees Celsius	%lf	NUMBER	TBD	TBD	temperature of FPI sensor 1
3490	trc_temperature_table	temp_inf_t3	FLOAT8	degrees Celsius	%lf	NUMBER	TBD	TBD	temperature of FPI sensor 2
3491	trc_temperature_table	temp_inf_t6	FLOAT8	degrees Celsius	%lf	NUMBER	TBD	TBD	temperature of FPI sensor 3
3492	trc_temperature_table	temp_inf_time	TIME8	seconds	%d.%09d	NUMBER	0	2147483647	time temperature was taken for FPI sensors 1, 2, and 3
3493	trc_temperature_table	fpi_encoder	FLOAT8	millimeters	%lf	NUMBER	TBD	TBD	Encoder position of FPI focus
3494	trc_temperature_table	fpi_service_code	INT4	N/A	%d	NUMBER	TBD	TBD	number of positioning errors of FPI focus
3495	trc_temperature_table	fpi_encoder_time	TIME8	seconds	%d.%09d	NUMBER	0	2147483647	time when the fpi_encoder value was set

	A	B	C	D	E	F	G	H	I
3496	trc_alignment_table								table containing alignment information determined during imager alignment phase
3497	trc_alignment_table	packet	BINARY	N/A	%s	NUMBER			data packet as it was received from the TA
3498	trc_alignment_table	pkt_timestamp	TIME8	seconds	%d.%09d	NUMBER	0	2147483647	time data packet was constructed by TA
3499	trc_alignment_table	timestamp	TIME8	seconds	%d.%09d	NUMBER	0	2147483647	time at which the event happened or was captured
3500	trc_alignment_table	table_id	UINT4	N/A	%u	NUMBER	0	4294967295	ID of the current table
3501	trc_alignment_table	alig_wfi_wfimf_quat	UQUAT32	N/A	%lf	NUMBER	-1	1	quaternion expressing alignment of WFIRF w.r.t. WFIMFRF
3502	trc_alignment_table	alig_ffi_ffimf_quat	UQUAT32	N/A	%lf	NUMBER	-1	1	quaternion expressing alignment of FFIRF w.r.t. FFIMFRF
3503	trc_alignment_table	alig_fpi_fpimf_quat	UQUAT32	N/A	%lf	NUMBER	-1	1	quaternion expressing alignment of FPIRF w.r.t. FPIMFRF
3504	trc_alignment_table	align_data_time	TIME8	seconds	%d.%09d	NUMBER	0	2147483647	timestamp for WFI, FFI, and FPI alignment data
3505	trc_alignment_table	alig_iqc_quat	UQUAT32	N/A	%lf	NUMBER	-1	1	quaternion expressing alignment of IQC
3506	trc_alignment_table	alig_iqc_time	TIME8	seconds	%d.%09d	NUMBER	0	2147483647	timestamp for IQC alignment data
3507	trc_alignment_table	temp_inf_t2	FLOAT8	degrees Celsius	%lf	NUMBER	TBD	TBD	temperature of FPI sensor 1 (copy from temperature_table)
3508	trc_alignment_table	temp_inf_t3	FLOAT8	degrees Celsius	%lf	NUMBER	TBD	TBD	temperature of FPI sensor 2 (copy from temperature_table)
3509	trc_alignment_table	temp_inf_t6	FLOAT8	degrees Celsius	%lf	NUMBER	TBD	TBD	temperature of FPI sensor 3 (copy from temperature_table)
3510	trc_alignment_table	ts_temp_time	TIME8	seconds	%d.%09d	NUMBER	0	2147483647	time temperature was taken for FPI sensors 1, 2, and 3
3511	wfi_control_table								table used by the WFI camera processor for various functions
3512	wfi_control_table	packet	BINARY	N/A	%s	NUMBER			data packet as it was received from the TA
3513	wfi_control_table	pkt_timestamp	TIME8	seconds	%d.%09d	NUMBER	0	2147483647	time data packet was constructed by TA
3514	wfi_control_table	timestamp	TIME8	seconds	%d.%09d	NUMBER	0	2147483647	time at which the event happened or was captured
3515	wfi_control_table	table_id	UINT4	N/A	%u	NUMBER	0	4294967295	ID of the current table
3516	wfi_control_table	status_buf_a	UINT4	N/A	%u	ENUM	0	4	reports current status of image buffer A(0: IDLE), (1: DATA_IN), (2: CALC), (3: CALC_DATA_OUT), (4: DATA_OUT),
3517	wfi_control_table	status_buf_b	UINT4	N/A	%u	ENUM	0	4	reports current status of image buffer B(0: IDLE), (1: DATA_IN), (2: CALC), (3: CALC_DATA_OUT), (4: DATA_OUT),
3518	wfi_control_table	status_buf_c	UINT4	N/A	%u	ENUM	0	4	reports current status of image buffer C(0: IDLE), (1: DATA_IN), (2: CALC), (3: CALC_DATA_OUT), (4: DATA_OUT),
3519	wfi_control_table	calc_state	UINT4	N/A	%u	ENUM	0	4	reports detailed status of calculation(0: IDLE), (1: AOI_BS_REQ), (2: DATA_SORT), (3: CENTR_CALC_LIMB_CALC_WORK), (4: DARKFIELD_CALC_WORK),
3520	wfi_control_table	img_in_buf_a	INT4	N/A	%d	NUMBER	0	39999	reports the ID of the image in buffer A
3521	wfi_control_table	img_in_buf_b	INT4	N/A	%d	NUMBER	0	39999	reports the ID of the image in buffer B
3522	wfi_control_table	img_in_buf_c	INT4	N/A	%d	NUMBER	0	39999	reports the ID of the image in buffer C
3523	wfi_control_table	cyc_mode	UINT4	N/A	%u	ENUM	0	4	specifies mode of processing for the next image transferred(0: IDLE), (1: MONITOR), (2: NORMAL), (3: DARK_AQC), (4: TEST),
3524	wfi_control_table	dark_num	UINT4	N/A	%u	NUMBER	1	20	desired number of images used for calculation of darkfield image by averaging
3525	wfi_control_table	dark_cnt	UINT4	N/A	%u	NUMBER	0	20	current counter status

	A	B	C	D	E	F	G	H	I
3526	wfi_control_table	img_trans_size	UINT4	N/A	%u	NUMBER	0	4294967295	image size (in bytes) for the next image transfer
3527	wfi_control_table	pixel_fmt	INT4	N/A	%d	ENUM	0	1	pixel format for the next image transferred(0: 8_BIT), (1: 14_BIT),
3528	wfi_control_table	pixel_grp	INT4	N/A	%d	ENUM	0	2	pixel grouping for the next image transferred(0: 1x1), (1: 2x2), (2: 4x4),
3529	wfi_control_table	next_expo_sn	INT4	N/A	%d	NUMBER	10000	39999	image ID which will be assigned to the next image after start of exposure
3530	wfi_aoi_bs_table								table for WFI AOI boresight information
3531	wfi_aoi_bs_table	packet	BINARY	N/A	%s	NUMBER			data packet as it was received from the TA
3532	wfi_aoi_bs_table	pkt_timestamp	TIME8	seconds	%d.%09d	NUMBER	0	2147483647	time data packet was constructed by TA
3533	wfi_aoi_bs_table	timestamp	TIME8	seconds	%d.%09d	NUMBER	0	2147483647	time at which the event happened or was captured
3534	wfi_aoi_bs_table	table_id	UINT4	N/A	%u	NUMBER	0	4294967295	ID of the current table
3535	wfi_aoi_bs_table	buffer_id	UINT4	N/A	%u	ENUM	0	2	specifies buffer containing the image referring to the AOIs in this table(0: A), (1: B), (2: C),
3536	wfi_aoi_bs_table	image_snr	INT4	N/A	%d	NUMBER	0	39999	serial number of the image referring to the data in this table
3537	wfi_aoi_bs_table	exp_time	INT4	milliseconds	%d	NUMBER	10	10000	duration of exposure period
3538	wfi_aoi_bs_table	pixel_fmt	INT4	N/A	%d	ENUM	0	1	pixel format of image data in specified buffer(0: 8_BIT), (1: 14_BIT),
3539	wfi_aoi_bs_table	pixel_grp	INT4	N/A	%d	ENUM	0	2	pixel grouping of image data in specified buffer(0: 1x1), (1: 2x2), (2: 4x4),
3540	wfi_aoi_bs_table	filter_pos	INT4	N/A	%d	ENUM	-1	6	filter position(-1: UNDEFINED), (0: HOME), (1: CLOSED), (2: FILTER_1), (3: FILTER_2), (4: FILTER_3), (5: FILTER_4), (6: FILTER_5),
3541	wfi_aoi_bs_table	focus_pos	FLOAT8	millimeters	%lf	NUMBER	0	600	focus position (only valid for FPI)
3542	wfi_aoi_bs_table	focal_len	FLOAT4	millimeters	%f	NUMBER	100	100000	focal length of camera optics
3543	wfi_aoi_bs_table	reticle	FLOAT8	N/A	%lf	NUMBER	0	1	reticle brightness (only valid for FPI)
3544	wfi_aoi_bs_table	bs_snr	UINT4	N/A	%u	NUMBER	0	999	boresight serial number
3545	wfi_aoi_bs_table	bs_pix_state	INT4	N/A	%d	ENUM	0	1	status of boresight raw pixel image position data(0: NOT_VALID), (1: VALID),
3546	wfi_aoi_bs_table	bs_pix_pos_row	FLOAT4	N/A	%f	NUMBER	0	1023	boresight row position in raw pixel image coordinates
3547	wfi_aoi_bs_table	bs_pix_pos_col	FLOAT4	N/A	%f	NUMBER	0	1023	boresight column position in raw pixel image coordinates
3548	wfi_aoi_bs_table	bs_crf_status	INT4	N/A	%d	ENUM	0	1	status of boresight CRF position data(0: NOT_VALID), (1: VALID),
3549	wfi_aoi_bs_table	bs_crf_axis_u	FLOAT8	N/A	%f	NUMBER	-1	1	boresight u axis position in camera reference frame
3550	wfi_aoi_bs_table	bs_crf_axis_v	FLOAT8	N/A	%f	NUMBER	-1	1	boresight v axis position in camera reference frame
3551	wfi_aoi_bs_table	bs_crf_axis_w	FLOAT8	N/A	%f	NUMBER	-1	1	boresight w axis position in camera reference frame
3552	wfi_aoi_bs_table	aoi_1_aoi_state	INT4	N/A	%d	ENUM	0	1	indicates whether the AOI is defined on the specified image or cleared(0: CLEARED), (1: DEFINED),
3553	wfi_aoi_bs_table	aoi_1_aoi_snr	UINT4	N/A	%u	NUMBER	0	999	serial number of AOI 1
3554	wfi_aoi_bs_table	aoi_1_aoi_size_rows	UINT4	N/A	%u	NUMBER	0	150	size of AOI 1 in pixel row values
3555	wfi_aoi_bs_table	aoi_1_aoi_size_cols	UINT4	N/A	%u	NUMBER	0	150	size of AOI 1 in pixel column values
3556	wfi_aoi_bs_table	aoi_1_pos_pix_status	UINT4	N/A	%u	ENUM	0	1	status of AOI 1 position in pixel coordinates(0: NOT_VALID), (1: VALID),
3557	wfi_aoi_bs_table	aoi_1_pos_pix_row_start	UINT4	N/A	%u	NUMBER	0	1023	row position of AOI 1 in pixel coordinates
3558	wfi_aoi_bs_table	aoi_1_pos_pix_col_start	UINT4	N/A	%u	NUMBER	0	1023	column position of AOI 1 in pixel coordinates

	A	B	C	D	E	F	G	H	I
3559	wfi_aoi_bs_table	aoi_1_pos_pix_size_rows	UINT4	N/A	%u	NUMBER	0	1023	row size of AOI 1 in pixel coordinates
3560	wfi_aoi_bs_table	aoi_1_pos_pix_size_cols	UINT4	N/A	%u	NUMBER	0	1023	column size of AOI 1 in pixel coordinates
3561	wfi_aoi_bs_table	aoi_1_pos_pix_aoi_fov	UINT4	N/A	%u	ENUM	0	2	indicates the position of the AOI relative to the imager FOV(0: ON_FOV), (1: PART_FOV), (2: OFF_FOV),
3562	wfi_aoi_bs_table	aoi_1_pos_crf_status	INT4	N/A	%d	ENUM	0	1	status of AOI 1 position in the camera reference frame(0: NOT_VALID), (1: VALID),
3563	wfi_aoi_bs_table	aoi_1_pos_crf_axis_u	FLOAT8	N/A	%f	NUMBER	-1	1	AOI 1 U axis position in the camera reference frame
3564	wfi_aoi_bs_table	aoi_1_pos_crf_axis_v	FLOAT8	N/A	%f	NUMBER	-1	1	AOI 1 V axis position in the camera reference frame
3565	wfi_aoi_bs_table	aoi_1_pos_crf_axis_w	FLOAT8	N/A	%f	NUMBER	-1	1	AOI 1 W axis position in the camera reference frame
3566	wfi_aoi_bs_table	aoi_1_calc_type	UINT4	N/A	%u	ENUM	0	2	kind of calculation performed on AOI 1(0: OFF), (1: CENTROID), (2: LIMB),
3567	wfi_aoi_bs_table	aoi_1_calc_prio	UINT4	N/A	%u	ENUM	1	4	priority of calculation on AOI 1(1: HIGHEST), (2: HIGH), (3: LOW), (4: LOWEST),
3568	wfi_aoi_bs_table	aoi_1_calc_threshold	FLOAT4	N/A	%f	NUMBER	0	1	current threshold value for centroid or limb calculation
3569	wfi_aoi_bs_table	aoi_1_calc_par_range	FLOAT4	pixels	%f	NUMBER	0	100	current range limit value for centroid calculation
3570	wfi_aoi_bs_table	aoi_1_corr_darkfield	UINT4	N/A	%u	ENUM	0	1	indicates whether darkfield correction is used during centroid/limb and AOI position calculation(0: OFF), (1: ON),
3571	wfi_aoi_bs_table	aoi_1_corr_flatfield	UINT4	N/A	%u	ENUM	0	1	indicates whether flatfield correction is used during centroid/limb and AOI position calculation(0: OFF), (1: ON),
3572	wfi_aoi_bs_table	aoi_1_corr_distortion	UINT4	N/A	%u	ENUM	0	1	indicates whether distortion correction is used during centroid/limb and AOI position calculation(0: OFF), (1: ON),
3573	wfi_aoi_bs_table	aoi_2_aoi_state	INT4	N/A	%d	ENUM	0	1	indicates whether the AOI is defined on the specified image or cleared(0: CLEARED), (1: DEFINED),
3574	wfi_aoi_bs_table	aoi_2_aoi_snr	UINT4	N/A	%u	NUMBER	0	999	serial number of AOI 2
3575	wfi_aoi_bs_table	aoi_2_aoi_size_rows	UINT4	N/A	%u	NUMBER	0	150	size of AOI 2 in pixel row values
3576	wfi_aoi_bs_table	aoi_2_aoi_size_cols	UINT4	N/A	%u	NUMBER	0	150	size of AOI 2 in pixel column values
3577	wfi_aoi_bs_table	aoi_2_pos_pix_status	UINT4	N/A	%u	ENUM	0	1	status of AOI 2 position in pixel coordinates(0: NOT_VALID), (1: VALID),
3578	wfi_aoi_bs_table	aoi_2_pos_pix_row_start	UINT4	N/A	%u	NUMBER	0	1023	row position of AOI 2 in pixel coordinates
3579	wfi_aoi_bs_table	aoi_2_pos_pix_col_start	UINT4	N/A	%u	NUMBER	0	1023	column position of AOI 2 in pixel coordinates
3580	wfi_aoi_bs_table	aoi_2_pos_pix_size_rows	UINT4	N/A	%u	NUMBER	0	1023	row size of AOI 2 in pixel coordinates
3581	wfi_aoi_bs_table	aoi_2_pos_pix_size_cols	UINT4	N/A	%u	NUMBER	0	1023	column size of AOI 2 in pixel coordinates
3582	wfi_aoi_bs_table	aoi_2_pos_pix_aoi_fov	UINT4	N/A	%u	ENUM	0	2	indicates the position of the AOI relative to the imager FOV(0: ON_FOV), (1: PART_FOV), (2: OFF_FOV),
3583	wfi_aoi_bs_table	aoi_2_pos_crf_status	INT4	N/A	%d	ENUM	0	1	status of AOI 2 position in the camera reference frame(0: NOT_VALID), (1: VALID),
3584	wfi_aoi_bs_table	aoi_2_pos_crf_axis_u	FLOAT8	N/A	%f	NUMBER	-1	1	AOI 2 U axis position in the camera reference frame
3585	wfi_aoi_bs_table	aoi_2_pos_crf_axis_v	FLOAT8	N/A	%f	NUMBER	-1	1	AOI 2 V axis position in the camera reference frame
3586	wfi_aoi_bs_table	aoi_2_pos_crf_axis_w	FLOAT8	N/A	%f	NUMBER	-1	1	AOI 2 W axis position in the camera reference frame
3587	wfi_aoi_bs_table	aoi_2_calc_type	UINT4	N/A	%u	ENUM	0	2	kind of calculation performed on AOI 2(0: OFF), (1: CENTROID), (2: LIMB),
3588	wfi_aoi_bs_table	aoi_2_calc_prio	UINT4	N/A	%u	ENUM	1	4	priority of calculation on AOI 2(1: HIGHEST), (2: HIGH), (3: LOW), (4: LOWEST),
3589	wfi_aoi_bs_table	aoi_2_calc_threshold	FLOAT4	N/A	%f	NUMBER	0	1	current threshold value for centroid or limb calculation
3590	wfi_aoi_bs_table	aoi_2_calc_par_range	FLOAT4	pixels	%f	NUMBER	0	100	current range limit value for centroid calculation
3591	wfi_aoi_bs_table	aoi_2_corr_darkfield	UINT4	N/A	%u	ENUM	0	1	indicates whether darkfield correction is used during centroid/limb and AOI position calculation(0: OFF), (1: ON),

	A	B	C	D	E	F	G	H	I
3592	wfi_aoi_bs_table	aoi_2_corr_flatfield	UINT4	N/A	%u	ENUM	0	1	indicates whether flatfield correction is used during centroid/limb and AOI position calculation(0: OFF), (1: ON),
3593	wfi_aoi_bs_table	aoi_2_corr_distortion	UINT4	N/A	%u	ENUM	0	1	indicates whether distortion correction is used during centroid/limb and AOI position calculation(0: OFF), (1: ON),
3594	wfi_aoi_bs_table	aoi_3_aoi_state	INT4	N/A	%d	ENUM	0	1	indicates whether the AOI is defined on the specified image or cleared(0: CLEARED), (1: DEFINED),
3595	wfi_aoi_bs_table	aoi_3_aoi_snr	UINT4	N/A	%u	NUMBER	0	999	serial number of AOI 3
3596	wfi_aoi_bs_table	aoi_3_aoi_size_rows	UINT4	N/A	%u	NUMBER	0	150	size of AOI 3 in pixel row values
3597	wfi_aoi_bs_table	aoi_3_aoi_size_cols	UINT4	N/A	%u	NUMBER	0	150	size of AOI 3 in pixel column values
3598	wfi_aoi_bs_table	aoi_3_pos_pix_status	UINT4	N/A	%u	ENUM	0	1	status of AOI 3 position in pixel coordinates(0: NOT_VALID), (1: VALID),
3599	wfi_aoi_bs_table	aoi_3_pos_pix_row_start	UINT4	N/A	%u	NUMBER	0	1023	row position of AOI 3 in pixel coordinates
3600	wfi_aoi_bs_table	aoi_3_pos_pix_col_start	UINT4	N/A	%u	NUMBER	0	1023	column position of AOI 3 in pixel coordinates
3601	wfi_aoi_bs_table	aoi_3_pos_pix_size_rows	UINT4	N/A	%u	NUMBER	0	1023	row size of AOI 3 in pixel coordinates
3602	wfi_aoi_bs_table	aoi_3_pos_pix_size_cols	UINT4	N/A	%u	NUMBER	0	1023	column size of AOI 3 in pixel coordinates
3603	wfi_aoi_bs_table	aoi_3_pos_pix_aoi_fov	UINT4	N/A	%u	ENUM	0	2	indicates the position of the AOI relative to the imager FOV(0: ON_FOV), (1: PART_FOV), (2: OFF_FOV),
3604	wfi_aoi_bs_table	aoi_3_pos_crf_status	INT4	N/A	%d	ENUM	0	1	status of AOI 3 position in the camera reference frame(0: NOT_VALID), (1: VALID),
3605	wfi_aoi_bs_table	aoi_3_pos_crf_axis_u	FLOAT8	N/A	%f	NUMBER	-1	1	AOI 3 U axis position in the camera reference frame
3606	wfi_aoi_bs_table	aoi_3_pos_crf_axis_v	FLOAT8	N/A	%f	NUMBER	-1	1	AOI 3 V axis position in the camera reference frame
3607	wfi_aoi_bs_table	aoi_3_pos_crf_axis_w	FLOAT8	N/A	%f	NUMBER	-1	1	AOI 3 W axis position in the camera reference frame
3608	wfi_aoi_bs_table	aoi_3_calc_type	UINT4	N/A	%u	ENUM	0	2	kind of calculation performed on AOI 3(0: OFF), (1: CENTROID), (2: LIMB),
3609	wfi_aoi_bs_table	aoi_3_calc_prio	UINT4	N/A	%u	ENUM	1	4	priority of calculation on AOI 3(1: HIGHEST), (2: HIGH), (3: LOW), (4: LOWEST),
3610	wfi_aoi_bs_table	aoi_3_calc_threshold	FLOAT4	N/A	%f	NUMBER	0	1	current threshold value for centroid or limb calculation
3611	wfi_aoi_bs_table	aoi_3_calc_par_range	FLOAT4	pixels	%f	NUMBER	0	100	current range limit value for centroid calculation
3612	wfi_aoi_bs_table	aoi_3_corr_darkfield	UINT4	N/A	%u	ENUM	0	1	indicates whether darkfield correction is used during centroid/limb and AOI position calculation(0: OFF), (1: ON),
3613	wfi_aoi_bs_table	aoi_3_corr_flatfield	UINT4	N/A	%u	ENUM	0	1	indicates whether flatfield correction is used during centroid/limb and AOI position calculation(0: OFF), (1: ON),
3614	wfi_aoi_bs_table	aoi_3_corr_distortion	UINT4	N/A	%u	ENUM	0	1	indicates whether distortion correction is used during centroid/limb and AOI position calculation(0: OFF), (1: ON),
3615	wfi_aoi_bs_table	aoi_4_aoi_state	INT4	N/A	%d	ENUM	0	1	indicates whether the AOI is defined on the specified image or cleared(0: CLEARED), (1: DEFINED),
3616	wfi_aoi_bs_table	aoi_4_aoi_snr	UINT4	N/A	%u	NUMBER	0	999	serial number of AOI 4
3617	wfi_aoi_bs_table	aoi_4_aoi_size_rows	UINT4	N/A	%u	NUMBER	0	150	size of AOI 4 in pixel row values
3618	wfi_aoi_bs_table	aoi_4_aoi_size_cols	UINT4	N/A	%u	NUMBER	0	150	size of AOI 4 in pixel column values
3619	wfi_aoi_bs_table	aoi_4_pos_pix_status	UINT4	N/A	%u	ENUM	0	1	status of AOI 4 position in pixel coordinates(0: NOT_VALID), (1: VALID),
3620	wfi_aoi_bs_table	aoi_4_pos_pix_row_start	UINT4	N/A	%u	NUMBER	0	1023	row position of AOI 4 in pixel coordinates
3621	wfi_aoi_bs_table	aoi_4_pos_pix_col_start	UINT4	N/A	%u	NUMBER	0	1023	column position of AOI 4 in pixel coordinates
3622	wfi_aoi_bs_table	aoi_4_pos_pix_size_rows	UINT4	N/A	%u	NUMBER	0	1023	row size of AOI 4 in pixel coordinates
3623	wfi_aoi_bs_table	aoi_4_pos_pix_size_cols	UINT4	N/A	%u	NUMBER	0	1023	column size of AOI 4 in pixel coordinates
3624	wfi_aoi_bs_table	aoi_4_pos_pix_aoi_fov	UINT4	N/A	%u	ENUM	0	2	indicates the position of the AOI relative to the imager FOV(0: ON_FOV), (1: PART_FOV), (2: OFF_FOV),

	A	B	C	D	E	F	G	H	I
3625	wfi_aoi_bs_table	aoi_4_pos_crf_status	INT4	N/A	%d	ENUM	0	1	status of AOI 4 position in the camera reference frame(0: NOT_VALID), (1: VALID),
3626	wfi_aoi_bs_table	aoi_4_pos_crf_axis_u	FLOAT8	N/A	%f	NUMBER	-1	1	AOI 4 U axis position in the camera reference frame
3627	wfi_aoi_bs_table	aoi_4_pos_crf_axis_v	FLOAT8	N/A	%f	NUMBER	-1	1	AOI 4 V axis position in the camera reference frame
3628	wfi_aoi_bs_table	aoi_4_pos_crf_axis_w	FLOAT8	N/A	%f	NUMBER	-1	1	AOI 4 W axis position in the camera reference frame
3629	wfi_aoi_bs_table	aoi_4_calc_type	UINT4	N/A	%u	ENUM	0	2	kind of calculation performed on AOI 4(0: OFF), (1: CENTROID), (2: LIMB),
3630	wfi_aoi_bs_table	aoi_4_calc_prio	UINT4	N/A	%u	ENUM	1	4	priority of calculation on AOI 4(1: HIGHEST), (2: HIGH), (3: LOW), (4: LOWEST),
3631	wfi_aoi_bs_table	aoi_4_calc_threshold	FLOAT4	N/A	%f	NUMBER	0	1	current threshold value for centroid or limb calculation
3632	wfi_aoi_bs_table	aoi_4_calc_par_range	FLOAT4	pixels	%f	NUMBER	0	100	current range limit value for centroid calculation
3633	wfi_aoi_bs_table	aoi_4_corr_darkfield	UINT4	N/A	%u	ENUM	0	1	indicates whether darkfield correction is used during centroid/limb and AOI position calculation(0: OFF), (1: ON),
3634	wfi_aoi_bs_table	aoi_4_corr_flatfield	UINT4	N/A	%u	ENUM	0	1	indicates whether flatfield correction is used during centroid/limb and AOI position calculation(0: OFF), (1: ON),
3635	wfi_aoi_bs_table	aoi_4_corr_distortion	UINT4	N/A	%u	ENUM	0	1	indicates whether distortion correction is used during centroid/limb and AOI position calculation(0: OFF), (1: ON),
3636	wfi_aoi_bs_table	aoi_5_aoi_state	INT4	N/A	%d	ENUM	0	1	indicates whether the AOI is defined on the specified image or cleared(0: CLEARED), (1: DEFINED),
3637	wfi_aoi_bs_table	aoi_5_aoi_snr	UINT4	N/A	%u	NUMBER	0	999	serial number of AOI 5
3638	wfi_aoi_bs_table	aoi_5_aoi_size_rows	UINT4	N/A	%u	NUMBER	0	150	size of AOI 5 in pixel row values
3639	wfi_aoi_bs_table	aoi_5_aoi_size_cols	UINT4	N/A	%u	NUMBER	0	150	size of AOI 5 in pixel column values
3640	wfi_aoi_bs_table	aoi_5_pos_pix_status	UINT4	N/A	%u	ENUM	0	1	status of AOI 5 position in pixel coordinates(0: NOT_VALID), (1: VALID),
3641	wfi_aoi_bs_table	aoi_5_pos_pix_row_start	UINT4	N/A	%u	NUMBER	0	1023	row position of AOI 5 in pixel coordinates
3642	wfi_aoi_bs_table	aoi_5_pos_pix_col_start	UINT4	N/A	%u	NUMBER	0	1023	column position of AOI 5 in pixel coordinates
3643	wfi_aoi_bs_table	aoi_5_pos_pix_size_rows	UINT4	N/A	%u	NUMBER	0	1023	row size of AOI 5 in pixel coordinates
3644	wfi_aoi_bs_table	aoi_5_pos_pix_size_cols	UINT4	N/A	%u	NUMBER	0	1023	column size of AOI 5 in pixel coordinates
3645	wfi_aoi_bs_table	aoi_5_pos_pix_aoi_fov	UINT4	N/A	%u	ENUM	0	2	indicates the position of the AOI relative to the imager FOV(0: ON_FOV), (1: PART_FOV), (2: OFF_FOV),
3646	wfi_aoi_bs_table	aoi_5_pos_crf_status	INT4	N/A	%d	ENUM	0	1	status of AOI 5 position in the camera reference frame(0: NOT_VALID), (1: VALID),
3647	wfi_aoi_bs_table	aoi_5_pos_crf_axis_u	FLOAT8	N/A	%f	NUMBER	-1	1	AOI 5 U axis position in the camera reference frame
3648	wfi_aoi_bs_table	aoi_5_pos_crf_axis_v	FLOAT8	N/A	%f	NUMBER	-1	1	AOI 5 V axis position in the camera reference frame
3649	wfi_aoi_bs_table	aoi_5_pos_crf_axis_w	FLOAT8	N/A	%f	NUMBER	-1	1	AOI 5 W axis position in the camera reference frame
3650	wfi_aoi_bs_table	aoi_5_calc_type	UINT4	N/A	%u	ENUM	0	2	kind of calculation performed on AOI 5(0: OFF), (1: CENTROID), (2: LIMB),
3651	wfi_aoi_bs_table	aoi_5_calc_prio	UINT4	N/A	%u	ENUM	1	4	priority of calculation on AOI 5(1: HIGHEST), (2: HIGH), (3: LOW), (4: LOWEST),
3652	wfi_aoi_bs_table	aoi_5_calc_threshold	FLOAT4	N/A	%f	NUMBER	0	1	current threshold value for centroid or limb calculation
3653	wfi_aoi_bs_table	aoi_5_calc_par_range	FLOAT4	pixels	%f	NUMBER	0	100	current range limit value for centroid calculation
3654	wfi_aoi_bs_table	aoi_5_corr_darkfield	UINT4	N/A	%u	ENUM	0	1	indicates whether darkfield correction is used during centroid/limb and AOI position calculation(0: OFF), (1: ON),
3655	wfi_aoi_bs_table	aoi_5_corr_flatfield	UINT4	N/A	%u	ENUM	0	1	indicates whether flatfield correction is used during centroid/limb and AOI position calculation(0: OFF), (1: ON),
3656	wfi_aoi_bs_table	aoi_5_corr_distortion	UINT4	N/A	%u	ENUM	0	1	indicates whether distortion correction is used during centroid/limb and AOI position calculation(0: OFF), (1: ON),

	A	B	C	D	E	F	G	H	I
3657	wfi_aoi_bs_table	aoi_6_aoi_state	INT4	N/A	%d	ENUM	0	1	indicates whether the AOI is defined on the specified image or cleared(0: CLEARED), (1: DEFINED),
3658	wfi_aoi_bs_table	aoi_6_aoi_snr	UINT4	N/A	%u	NUMBER	0	999	serial number of AOI 6
3659	wfi_aoi_bs_table	aoi_6_aoi_size_rows	UINT4	N/A	%u	NUMBER	0	150	size of AOI 6 in pixel row values
3660	wfi_aoi_bs_table	aoi_6_aoi_size_cols	UINT4	N/A	%u	NUMBER	0	150	size of AOI 6 in pixel column values
3661	wfi_aoi_bs_table	aoi_6_pos_pix_status	UINT4	N/A	%u	ENUM	0	1	status of AOI 6 position in pixel coordinates(0: NOT_VALID), (1: VALID),
3662	wfi_aoi_bs_table	aoi_6_pos_pix_row_start	UINT4	N/A	%u	NUMBER	0	1023	row position of AOI 6 in pixel coordinates
3663	wfi_aoi_bs_table	aoi_6_pos_pix_col_start	UINT4	N/A	%u	NUMBER	0	1023	column position of AOI 6 in pixel coordinates
3664	wfi_aoi_bs_table	aoi_6_pos_pix_size_rows	UINT4	N/A	%u	NUMBER	0	1023	row size of AOI 6 in pixel coordinates
3665	wfi_aoi_bs_table	aoi_6_pos_pix_size_cols	UINT4	N/A	%u	NUMBER	0	1023	column size of AOI 6 in pixel coordinates
3666	wfi_aoi_bs_table	aoi_6_pos_pix_aoi_fov	UINT4	N/A	%u	ENUM	0	2	indicates the position of the AOI relative to the imager FOV(0: ON_FOV), (1: PART_FOV), (2: OFF_FOV),
3667	wfi_aoi_bs_table	aoi_6_pos_crf_status	INT4	N/A	%d	ENUM	0	1	status of AOI 6 position in the camera reference frame(0: NOT_VALID), (1: VALID),
3668	wfi_aoi_bs_table	aoi_6_pos_crf_axis_u	FLOAT8	N/A	%f	NUMBER	-1	1	AOI 6 U axis position in the camera reference frame
3669	wfi_aoi_bs_table	aoi_6_pos_crf_axis_v	FLOAT8	N/A	%f	NUMBER	-1	1	AOI 6 V axis position in the camera reference frame
3670	wfi_aoi_bs_table	aoi_6_pos_crf_axis_w	FLOAT8	N/A	%f	NUMBER	-1	1	AOI 6 W axis position in the camera reference frame
3671	wfi_aoi_bs_table	aoi_6_calc_type	UINT4	N/A	%u	ENUM	0	2	kind of calculation performed on AOI 6(0: OFF), (1: CENTROID), (2: LIMB),
3672	wfi_aoi_bs_table	aoi_6_calc_prio	UINT4	N/A	%u	ENUM	1	4	priority of calculation on AOI 6(1: HIGHEST), (2: HIGH), (3: LOW), (4: LOWEST),
3673	wfi_aoi_bs_table	aoi_6_calc_threshold	FLOAT4	N/A	%f	NUMBER	0	1	current threshold value for centroid or limb calculation
3674	wfi_aoi_bs_table	aoi_6_calc_par_range	FLOAT4	pixels	%f	NUMBER	0	100	current range limit value for centroid calculation
3675	wfi_aoi_bs_table	aoi_6_corr_darkfield	UINT4	N/A	%u	ENUM	0	1	indicates whether darkfield correction is used during centroid/limb and AOI position calculation(0: OFF), (1: ON),
3676	wfi_aoi_bs_table	aoi_6_corr_flatfield	UINT4	N/A	%u	ENUM	0	1	indicates whether flatfield correction is used during centroid/limb and AOI position calculation(0: OFF), (1: ON),
3677	wfi_aoi_bs_table	aoi_6_corr_distortion	UINT4	N/A	%u	ENUM	0	1	indicates whether distortion correction is used during centroid/limb and AOI position calculation(0: OFF), (1: ON),
3678	wfi_aoi_bs_table	aoi_7_aoi_state	INT4	N/A	%d	ENUM	0	1	indicates whether the AOI is defined on the specified image or cleared(0: CLEARED), (1: DEFINED),
3679	wfi_aoi_bs_table	aoi_7_aoi_snr	UINT4	N/A	%u	NUMBER	0	999	serial number of AOI 7
3680	wfi_aoi_bs_table	aoi_7_aoi_size_rows	UINT4	N/A	%u	NUMBER	0	150	size of AOI 7 in pixel row values
3681	wfi_aoi_bs_table	aoi_7_aoi_size_cols	UINT4	N/A	%u	NUMBER	0	150	size of AOI 7 in pixel column values
3682	wfi_aoi_bs_table	aoi_7_pos_pix_status	UINT4	N/A	%u	ENUM	0	1	status of AOI 7 position in pixel coordinates(0: NOT_VALID), (1: VALID),
3683	wfi_aoi_bs_table	aoi_7_pos_pix_row_start	UINT4	N/A	%u	NUMBER	0	1023	row position of AOI 7 in pixel coordinates
3684	wfi_aoi_bs_table	aoi_7_pos_pix_col_start	UINT4	N/A	%u	NUMBER	0	1023	column position of AOI 7 in pixel coordinates
3685	wfi_aoi_bs_table	aoi_7_pos_pix_size_rows	UINT4	N/A	%u	NUMBER	0	1023	row size of AOI 7 in pixel coordinates
3686	wfi_aoi_bs_table	aoi_7_pos_pix_size_cols	UINT4	N/A	%u	NUMBER	0	1023	column size of AOI 7 in pixel coordinates
3687	wfi_aoi_bs_table	aoi_7_pos_pix_aoi_fov	UINT4	N/A	%u	ENUM	0	2	indicates the position of the AOI relative to the imager FOV(0: ON_FOV), (1: PART_FOV), (2: OFF_FOV),
3688	wfi_aoi_bs_table	aoi_7_pos_crf_status	INT4	N/A	%d	ENUM	0	1	status of AOI 7 position in the camera reference frame(0: NOT_VALID), (1: VALID),
3689	wfi_aoi_bs_table	aoi_7_pos_crf_axis_u	FLOAT8	N/A	%f	NUMBER	-1	1	AOI 7 U axis position in the camera reference frame
3690	wfi_aoi_bs_table	aoi_7_pos_crf_axis_v	FLOAT8	N/A	%f	NUMBER	-1	1	AOI 7 V axis position in the camera reference frame

	A	B	C	D	E	F	G	H	I
3691	wfi_aoi_bs_table	aoi_7_pos_crf_axis_w	FLOAT8	N/A	%f	NUMBER	-1	1	AOI 7 W axis position in the camera reference frame
3692	wfi_aoi_bs_table	aoi_7_calc_type	UINT4	N/A	%u	ENUM	0	2	kind of calculation performed on AOI 7(0: OFF), (1: CENTROID), (2: LIMB),
3693	wfi_aoi_bs_table	aoi_7_calc_prio	UINT4	N/A	%u	ENUM	1	4	priority of calculation on AOI 7(1: HIGHEST), (2: HIGH), (3: LOW), (4: LOWEST),
3694	wfi_aoi_bs_table	aoi_7_calc_threshold	FLOAT4	N/A	%f	NUMBER	0	1	current threshold value for centroid or limb calculation
3695	wfi_aoi_bs_table	aoi_7_calc_par_range	FLOAT4	pixels	%f	NUMBER	0	100	current range limit value for centroid calculation
3696	wfi_aoi_bs_table	aoi_7_corr_darkfield	UINT4	N/A	%u	ENUM	0	1	indicates whether darkfield correction is used during centroid/limb and AOI position calculation(0: OFF), (1: ON),
3697	wfi_aoi_bs_table	aoi_7_corr_flatfield	UINT4	N/A	%u	ENUM	0	1	indicates whether flatfield correction is used during centroid/limb and AOI position calculation(0: OFF), (1: ON),
3698	wfi_aoi_bs_table	aoi_7_corr_distortion	UINT4	N/A	%u	ENUM	0	1	indicates whether distortion correction is used during centroid/limb and AOI position calculation(0: OFF), (1: ON),
3699	wfi_aoi_bs_table	aoi_8_aoi_state	INT4	N/A	%d	ENUM	0	1	indicates whether the AOI is defined on the specified image or cleared(0: CLEARED), (1: DEFINED),
3700	wfi_aoi_bs_table	aoi_8_aoi_snr	UINT4	N/A	%u	NUMBER	0	999	serial number of AOI 8
3701	wfi_aoi_bs_table	aoi_8_aoi_size_rows	UINT4	N/A	%u	NUMBER	0	150	size of AOI 8 in pixel row values
3702	wfi_aoi_bs_table	aoi_8_aoi_size_cols	UINT4	N/A	%u	NUMBER	0	150	size of AOI 8 in pixel column values
3703	wfi_aoi_bs_table	aoi_8_pos_pix_status	UINT4	N/A	%u	ENUM	0	1	status of AOI 8 position in pixel coordinates(0: NOT_VALID), (1: VALID),
3704	wfi_aoi_bs_table	aoi_8_pos_pix_row_start	UINT4	N/A	%u	NUMBER	0	1023	row position of AOI 8 in pixel coordinates
3705	wfi_aoi_bs_table	aoi_8_pos_pix_col_start	UINT4	N/A	%u	NUMBER	0	1023	column position of AOI 8 in pixel coordinates
3706	wfi_aoi_bs_table	aoi_8_pos_pix_size_rows	UINT4	N/A	%u	NUMBER	0	1023	row size of AOI 8 in pixel coordinates
3707	wfi_aoi_bs_table	aoi_8_pos_pix_size_cols	UINT4	N/A	%u	NUMBER	0	1023	column size of AOI 8 in pixel coordinates
3708	wfi_aoi_bs_table	aoi_8_pos_pix_aoi_fov	UINT4	N/A	%u	ENUM	0	2	indicates the position of the AOI relative to the imager FOV(0: ON_FOV), (1: PART_FOV), (2: OFF_FOV),
3709	wfi_aoi_bs_table	aoi_8_pos_crf_status	INT4	N/A	%d	ENUM	0	1	status of AOI 8 position in the camera reference frame(0: NOT_VALID), (1: VALID),
3710	wfi_aoi_bs_table	aoi_8_pos_crf_axis_u	FLOAT8	N/A	%f	NUMBER	-1	1	AOI 8 U axis position in the camera reference frame
3711	wfi_aoi_bs_table	aoi_8_pos_crf_axis_v	FLOAT8	N/A	%f	NUMBER	-1	1	AOI 8 V axis position in the camera reference frame
3712	wfi_aoi_bs_table	aoi_8_pos_crf_axis_w	FLOAT8	N/A	%f	NUMBER	-1	1	AOI 8 W axis position in the camera reference frame
3713	wfi_aoi_bs_table	aoi_8_calc_type	UINT4	N/A	%u	ENUM	0	2	kind of calculation performed on AOI 8(0: OFF), (1: CENTROID), (2: LIMB),
3714	wfi_aoi_bs_table	aoi_8_calc_prio	UINT4	N/A	%u	ENUM	1	4	priority of calculation on AOI 8(1: HIGHEST), (2: HIGH), (3: LOW), (4: LOWEST),
3715	wfi_aoi_bs_table	aoi_8_calc_threshold	FLOAT4	N/A	%f	NUMBER	0	1	current threshold value for centroid or limb calculation
3716	wfi_aoi_bs_table	aoi_8_calc_par_range	FLOAT4	pixels	%f	NUMBER	0	100	current range limit value for centroid calculation
3717	wfi_aoi_bs_table	aoi_8_corr_darkfield	UINT4	N/A	%u	ENUM	0	1	indicates whether darkfield correction is used during centroid/limb and AOI position calculation(0: OFF), (1: ON),
3718	wfi_aoi_bs_table	aoi_8_corr_flatfield	UINT4	N/A	%u	ENUM	0	1	indicates whether flatfield correction is used during centroid/limb and AOI position calculation(0: OFF), (1: ON),
3719	wfi_aoi_bs_table	aoi_8_corr_distortion	UINT4	N/A	%u	ENUM	0	1	indicates whether distortion correction is used during centroid/limb and AOI position calculation(0: OFF), (1: ON),
3720	ffi_control_table								table used by the FFI camera processor for various functions
3721	ffi_control_table	packet	BINARY	N/A	%s	NUMBER			data packet as it was received from the TA
3722	ffi_control_table	pkt_timestamp	TIME8	seconds	%d.%09d	NUMBER	0	2147483647	time data packet was constructed by TA

	A	B	C	D	E	F	G	H	I
3723	ffi_control_table	timestamp	TIME8	seconds	%d.%09d	NUMBER	0	2147483647	time at which the event happened or was captured
3724	ffi_control_table	table_id	UINT4	N/A	%u	NUMBER	0	4294967295	ID of the current table
3725	ffi_control_table	status_buf_a	UINT4	N/A	%u	ENUM	0	4	reports current status of image buffer A(0: IDLE), (1: DATA_IN), (2: CALC), (3: CALC_DATA_OUT), (4: DATA_OUT),
3726	ffi_control_table	status_buf_b	UINT4	N/A	%u	ENUM	0	4	reports current status of image buffer B(0: IDLE), (1: DATA_IN), (2: CALC), (3: CALC_DATA_OUT), (4: DATA_OUT),
3727	ffi_control_table	status_buf_c	UINT4	N/A	%u	ENUM	0	4	reports current status of image buffer C(0: IDLE), (1: DATA_IN), (2: CALC), (3: CALC_DATA_OUT), (4: DATA_OUT),
3728	ffi_control_table	calc_state	UINT4	N/A	%u	ENUM	0	4	reports detailed status of calculation(0: IDLE), (1: AOI_BS_REQ), (2: DATA_SORT), (3: CENTR_CALC_LIMB_CALC_WORK), (4: DARKFIELD_CALC_WORK),
3729	ffi_control_table	img_in_buf_a	INT4	N/A	%d	NUMBER	0	39999	reports the ID of the image in buffer A
3730	ffi_control_table	img_in_buf_b	INT4	N/A	%d	NUMBER	0	39999	reports the ID of the image in buffer B
3731	ffi_control_table	img_in_buf_c	INT4	N/A	%d	NUMBER	0	39999	reports the ID of the image in buffer C
3732	ffi_control_table	cyc_mode	UINT4	N/A	%u	ENUM	0	4	specifies mode of processing for the next image transferred(0: IDLE), (1: MONITOR), (2: NORMAL), (3: DARK_AQC), (4: TEST),
3733	ffi_control_table	dark_num	UINT4	N/A	%u	NUMBER	1	20	desired number of images used for calculation of darkfield image by averaging
3734	ffi_control_table	dark_cnt	UINT4	N/A	%u	NUMBER	0	20	current counter status
3735	ffi_control_table	img_trans_size	UINT4	N/A	%u	NUMBER	0	4294967295	image size (in bytes) for the next image transfer
3736	ffi_control_table	pixel_fmt	INT4	N/A	%d	ENUM	0	1	pixel format for the next image transferred(0: 8_BIT), (1: 14_BIT),
3737	ffi_control_table	pixel_grp	INT4	N/A	%d	ENUM	0	2	pixel grouping for the next image transferred(0: 1x1), (1: 2x2), (2: 4x4),
3738	ffi_control_table	next_expo_sn	INT4	N/A	%d	NUMBER	10000	39999	image ID which will be assigned to the next image after start of exposure
3739	ffi_aoi_bs_table								table for FFI AOI boresight information
3740	ffi_aoi_bs_table	packet	BINARY	N/A	%s	NUMBER			data packet as it was received from the TA
3741	ffi_aoi_bs_table	pkt_timestamp	TIME8	seconds	%d.%09d	NUMBER	0	2147483647	time data packet was constructed by TA
3742	ffi_aoi_bs_table	timestamp	TIME8	seconds	%d.%09d	NUMBER	0	2147483647	time at which the event happened or was captured
3743	ffi_aoi_bs_table	table_id	UINT4	N/A	%u	NUMBER	0	4294967295	ID of the current table
3744	ffi_aoi_bs_table	buffer_id	UINT4	N/A	%u	ENUM	0	2	specifies buffer containing the image referring to the AOIs in this table(0: A), (1: B), (2: C),
3745	ffi_aoi_bs_table	image_snr	INT4	N/A	%d	NUMBER	0	39999	serial number of the image referring to the data in this table
3746	ffi_aoi_bs_table	exp_time	INT4	milliseconds	%d	NUMBER	10	10000	duration of exposure period
3747	ffi_aoi_bs_table	pixel_fmt	INT4	N/A	%d	ENUM	0	1	pixel format of image data in specified buffer(0: 8_BIT), (1: 14_BIT),
3748	ffi_aoi_bs_table	pixel_grp	INT4	N/A	%d	ENUM	0	2	pixel grouping of image data in specified buffer(0: 1x1), (1: 2x2), (2: 4x4),
3749	ffi_aoi_bs_table	filter_pos	INT4	N/A	%d	ENUM	-1	6	filter position(-1: UNDEFINED), (0: HOME), (1: CLOSED), (2: FILTER_1), (3: FILTER_2), (4: FILTER_3), (5: FILTER_4), (6: FILTER_5),
3750	ffi_aoi_bs_table	focus_pos	FLOAT8	millimeters	%lf	NUMBER	0	600	focus position (only valid for FPI)
3751	ffi_aoi_bs_table	focal_len	FLOAT4	millimeters	%f	NUMBER	100	100000	focal length of camera optics

	A	B	C	D	E	F	G	H	I
3752	ffi_aoi_bs_table	reticle	FLOAT8	N/A	%lf	NUMBER	0	1	reticle brightness (only valid for FPI)
3753	ffi_aoi_bs_table	bs_snr	UINT4	N/A	%u	NUMBER	0	999	boresight serial number
3754	ffi_aoi_bs_table	bs_pix_state	INT4	N/A	%d	ENUM	0	1	status of boresight raw pixel image position data(0: NOT_VALID), (1: VALID),
3755	ffi_aoi_bs_table	bs_pix_pos_row	FLOAT4	N/A	%f	NUMBER	0	1023	boresight row position in raw pixel image coordinates
3756	ffi_aoi_bs_table	bs_pix_pos_col	FLOAT4	N/A	%f	NUMBER	0	1023	boresight column position in raw pixel image coordinates
3757	ffi_aoi_bs_table	bs_crf_status	INT4	N/A	%d	ENUM	0	1	status of boresight CRF position data(0: NOT_VALID), (1: VALID),
3758	ffi_aoi_bs_table	bs_crf_axis_u	FLOAT8	N/A	%f	NUMBER	-1	1	boresight u axis position in camera reference frame
3759	ffi_aoi_bs_table	bs_crf_axis_v	FLOAT8	N/A	%f	NUMBER	-1	1	boresight v axis position in camera reference frame
3760	ffi_aoi_bs_table	bs_crf_axis_w	FLOAT8	N/A	%f	NUMBER	-1	1	boresight w axis position in camera reference frame
3761	ffi_aoi_bs_table	aoi_1_aoi_state	INT4	N/A	%d	ENUM	0	1	indicates whether the AOI is defined on the specified image or cleared(0: CLEARED), (1: DEFINED),
3762	ffi_aoi_bs_table	aoi_1_aoi_snr	UINT4	N/A	%u	NUMBER	0	999	serial number of AOI 1
3763	ffi_aoi_bs_table	aoi_1_aoi_size_rows	UINT4	N/A	%u	NUMBER	0	150	size of AOI 1 in pixel row values
3764	ffi_aoi_bs_table	aoi_1_aoi_size_cols	UINT4	N/A	%u	NUMBER	0	150	size of AOI 1 in pixel column values
3765	ffi_aoi_bs_table	aoi_1_pos_pix_status	UINT4	N/A	%u	ENUM	0	1	status of AOI 1 position in pixel coordinates(0: NOT_VALID), (1: VALID),
3766	ffi_aoi_bs_table	aoi_1_pos_pix_row_start	UINT4	N/A	%u	NUMBER	0	1023	row position of AOI 1 in pixel coordinates
3767	ffi_aoi_bs_table	aoi_1_pos_pix_col_start	UINT4	N/A	%u	NUMBER	0	1023	column position of AOI 1 in pixel coordinates
3768	ffi_aoi_bs_table	aoi_1_pos_pix_size_rows	UINT4	N/A	%u	NUMBER	0	1023	row size of AOI 1 in pixel coordinates
3769	ffi_aoi_bs_table	aoi_1_pos_pix_size_cols	UINT4	N/A	%u	NUMBER	0	1023	column size of AOI 1 in pixel coordinates
3770	ffi_aoi_bs_table	aoi_1_pos_pix_aoi_fov	UINT4	N/A	%u	ENUM	0	2	indicates the position of the AOI relative to the imager FOV(0: ON_FOV), (1: PART_FOV), (2: OFF_FOV),
3771	ffi_aoi_bs_table	aoi_1_pos_crf_status	INT4	N/A	%d	ENUM	0	1	status of AOI 1 position in the camera reference frame(0: NOT_VALID), (1: VALID),
3772	ffi_aoi_bs_table	aoi_1_pos_crf_axis_u	FLOAT8	N/A	%f	NUMBER	-1	1	AOI 1 U axis position in the camera reference frame
3773	ffi_aoi_bs_table	aoi_1_pos_crf_axis_v	FLOAT8	N/A	%f	NUMBER	-1	1	AOI 1 V axis position in the camera reference frame
3774	ffi_aoi_bs_table	aoi_1_pos_crf_axis_w	FLOAT8	N/A	%f	NUMBER	-1	1	AOI 1 W axis position in the camera reference frame
3775	ffi_aoi_bs_table	aoi_1_calc_type	UINT4	N/A	%u	ENUM	0	2	kind of calculation performed on AOI 1(0: OFF), (1: CENTROID), (2: LIMB),
3776	ffi_aoi_bs_table	aoi_1_calc_prio	UINT4	N/A	%u	ENUM	1	4	priority of calculation on AOI 1(1: HIGHEST), (2: HIGH), (3: LOW), (4: LOWEST),
3777	ffi_aoi_bs_table	aoi_1_calc_threshold	FLOAT4	N/A	%f	NUMBER	0	1	current threshold value for centroid or limb calculation
3778	ffi_aoi_bs_table	aoi_1_calc_par_range	FLOAT4	pixels	%f	NUMBER	0	100	current range limit value for centroid calculation
3779	ffi_aoi_bs_table	aoi_1_corr_darkfield	UINT4	N/A	%u	ENUM	0	1	indicates whether darkfield correction is used during centroid/limb and AOI position calculation(0: OFF), (1: ON),
3780	ffi_aoi_bs_table	aoi_1_corr_flatfield	UINT4	N/A	%u	ENUM	0	1	indicates whether flatfield correction is used during centroid/limb and AOI position calculation(0: OFF), (1: ON),
3781	ffi_aoi_bs_table	aoi_1_corr_distortion	UINT4	N/A	%u	ENUM	0	1	indicates whether distortion correction is used during centroid/limb and AOI position calculation(0: OFF), (1: ON),
3782	ffi_aoi_bs_table	aoi_2_aoi_state	INT4	N/A	%d	ENUM	0	1	indicates whether the AOI is defined on the specified image or cleared(0: CLEARED), (1: DEFINED),
3783	ffi_aoi_bs_table	aoi_2_aoi_snr	UINT4	N/A	%u	NUMBER	0	999	serial number of AOI 2
3784	ffi_aoi_bs_table	aoi_2_aoi_size_rows	UINT4	N/A	%u	NUMBER	0	150	size of AOI 2 in pixel row values
3785	ffi_aoi_bs_table	aoi_2_aoi_size_cols	UINT4	N/A	%u	NUMBER	0	150	size of AOI 2 in pixel column values
3786	ffi_aoi_bs_table	aoi_2_pos_pix_status	UINT4	N/A	%u	ENUM	0	1	status of AOI 2 position in pixel coordinates(0: NOT_VALID), (1: VALID),

	A	B	C	D	E	F	G	H	I
3787	ffi_aoi_bs_table	aoi_2_pos_pix_row_start	UINT4	N/A	%u	NUMBER	0	1023	row position of AOI 2 in pixel coordinates
3788	ffi_aoi_bs_table	aoi_2_pos_pix_col_start	UINT4	N/A	%u	NUMBER	0	1023	column position of AOI 2 in pixel coordinates
3789	ffi_aoi_bs_table	aoi_2_pos_pix_size_rows	UINT4	N/A	%u	NUMBER	0	1023	row size of AOI 2 in pixel coordinates
3790	ffi_aoi_bs_table	aoi_2_pos_pix_size_cols	UINT4	N/A	%u	NUMBER	0	1023	column size of AOI 2 in pixel coordinates
3791	ffi_aoi_bs_table	aoi_2_pos_pix_aoi_fov	UINT4	N/A	%u	ENUM	0	2	indicates the position of the AOI relative to the imager FOV(0: ON_FOV), (1: PART_FOV), (2: OFF_FOV),
3792	ffi_aoi_bs_table	aoi_2_pos_crf_status	INT4	N/A	%d	ENUM	0	1	status of AOI 2 position in the camera reference frame(0: NOT_VALID), (1: VALID),
3793	ffi_aoi_bs_table	aoi_2_pos_crf_axis_u	FLOAT8	N/A	%f	NUMBER	-1	1	AOI 2 U axis position in the camera reference frame
3794	ffi_aoi_bs_table	aoi_2_pos_crf_axis_v	FLOAT8	N/A	%f	NUMBER	-1	1	AOI 2 V axis position in the camera reference frame
3795	ffi_aoi_bs_table	aoi_2_pos_crf_axis_w	FLOAT8	N/A	%f	NUMBER	-1	1	AOI 2 W axis position in the camera reference frame
3796	ffi_aoi_bs_table	aoi_2_calc_type	UINT4	N/A	%u	ENUM	0	2	kind of calculation performed on AOI 2(0: OFF), (1: CENTROID), (2: LIMB),
3797	ffi_aoi_bs_table	aoi_2_calc_prio	UINT4	N/A	%u	ENUM	1	4	priority of calculation on AOI 2(1: HIGHEST), (2: HIGH), (3: LOW), (4: LOWEST),
3798	ffi_aoi_bs_table	aoi_2_calc_threshold	FLOAT4	N/A	%f	NUMBER	0	1	current threshold value for centroid or limb calculation
3799	ffi_aoi_bs_table	aoi_2_calc_par_range	FLOAT4	pixels	%f	NUMBER	0	100	current range limit value for centroid calculation
3800	ffi_aoi_bs_table	aoi_2_corr_darkfield	UINT4	N/A	%u	ENUM	0	1	indicates whether darkfield correction is used during centroid/limb and AOI position calculation(0: OFF), (1: ON),
3801	ffi_aoi_bs_table	aoi_2_corr_flatfield	UINT4	N/A	%u	ENUM	0	1	indicates whether flatfield correction is used during centroid/limb and AOI position calculation(0: OFF), (1: ON),
3802	ffi_aoi_bs_table	aoi_2_corr_distortion	UINT4	N/A	%u	ENUM	0	1	indicates whether distortion correction is used during centroid/limb and AOI position calculation(0: OFF), (1: ON),
3803	ffi_aoi_bs_table	aoi_3_aoi_state	INT4	N/A	%d	ENUM	0	1	indicates whether the AOI is defined on the specified image or cleared(0: CLEARED), (1: DEFINED),
3804	ffi_aoi_bs_table	aoi_3_aoi_snr	UINT4	N/A	%u	NUMBER	0	999	serial number of AOI 3
3805	ffi_aoi_bs_table	aoi_3_aoi_size_rows	UINT4	N/A	%u	NUMBER	0	150	size of AOI 3 in pixel row values
3806	ffi_aoi_bs_table	aoi_3_aoi_size_cols	UINT4	N/A	%u	NUMBER	0	150	size of AOI 3 in pixel column values
3807	ffi_aoi_bs_table	aoi_3_pos_pix_status	UINT4	N/A	%u	ENUM	0	1	status of AOI 3 position in pixel coordinates(0: NOT_VALID), (1: VALID),
3808	ffi_aoi_bs_table	aoi_3_pos_pix_row_start	UINT4	N/A	%u	NUMBER	0	1023	row position of AOI 3 in pixel coordinates
3809	ffi_aoi_bs_table	aoi_3_pos_pix_col_start	UINT4	N/A	%u	NUMBER	0	1023	column position of AOI 3 in pixel coordinates
3810	ffi_aoi_bs_table	aoi_3_pos_pix_size_rows	UINT4	N/A	%u	NUMBER	0	1023	row size of AOI 3 in pixel coordinates
3811	ffi_aoi_bs_table	aoi_3_pos_pix_size_cols	UINT4	N/A	%u	NUMBER	0	1023	column size of AOI 3 in pixel coordinates
3812	ffi_aoi_bs_table	aoi_3_pos_pix_aoi_fov	UINT4	N/A	%u	ENUM	0	2	indicates the position of the AOI relative to the imager FOV(0: ON_FOV), (1: PART_FOV), (2: OFF_FOV),
3813	ffi_aoi_bs_table	aoi_3_pos_crf_status	INT4	N/A	%d	ENUM	0	1	status of AOI 3 position in the camera reference frame(0: NOT_VALID), (1: VALID),
3814	ffi_aoi_bs_table	aoi_3_pos_crf_axis_u	FLOAT8	N/A	%f	NUMBER	-1	1	AOI 3 U axis position in the camera reference frame
3815	ffi_aoi_bs_table	aoi_3_pos_crf_axis_v	FLOAT8	N/A	%f	NUMBER	-1	1	AOI 3 V axis position in the camera reference frame
3816	ffi_aoi_bs_table	aoi_3_pos_crf_axis_w	FLOAT8	N/A	%f	NUMBER	-1	1	AOI 3 W axis position in the camera reference frame
3817	ffi_aoi_bs_table	aoi_3_calc_type	UINT4	N/A	%u	ENUM	0	2	kind of calculation performed on AOI 3(0: OFF), (1: CENTROID), (2: LIMB),
3818	ffi_aoi_bs_table	aoi_3_calc_prio	UINT4	N/A	%u	ENUM	1	4	priority of calculation on AOI 3(1: HIGHEST), (2: HIGH), (3: LOW), (4: LOWEST),
3819	ffi_aoi_bs_table	aoi_3_calc_threshold	FLOAT4	N/A	%f	NUMBER	0	1	current threshold value for centroid or limb calculation
3820	ffi_aoi_bs_table	aoi_3_calc_par_range	FLOAT4	pixels	%f	NUMBER	0	100	current range limit value for centroid calculation

	A	B	C	D	E	F	G	H	I
3821	ffi_aoi_bs_table	aoi_3_corr_darkfield	UINT4	N/A	%u	ENUM	0	1	indicates whether darkfield correction is used during centroid/limb and AOI position calculation(0: OFF), (1: ON),
3822	ffi_aoi_bs_table	aoi_3_corr_flatfield	UINT4	N/A	%u	ENUM	0	1	indicates whether flatfield correction is used during centroid/limb and AOI position calculation(0: OFF), (1: ON),
3823	ffi_aoi_bs_table	aoi_3_corr_distortion	UINT4	N/A	%u	ENUM	0	1	indicates whether distortion correction is used during centroid/limb and AOI position calculation(0: OFF), (1: ON),
3824	ffi_aoi_bs_table	aoi_4_aoi_state	INT4	N/A	%d	ENUM	0	1	indicates whether the AOI is defined on the specified image or cleared(0: CLEARED), (1: DEFINED),
3825	ffi_aoi_bs_table	aoi_4_aoi_snr	UINT4	N/A	%u	NUMBER	0	999	serial number of AOI 4
3826	ffi_aoi_bs_table	aoi_4_aoi_size_rows	UINT4	N/A	%u	NUMBER	0	150	size of AOI 4 in pixel row values
3827	ffi_aoi_bs_table	aoi_4_aoi_size_cols	UINT4	N/A	%u	NUMBER	0	150	size of AOI 4 in pixel column values
3828	ffi_aoi_bs_table	aoi_4_pos_pix_status	UINT4	N/A	%u	ENUM	0	1	status of AOI 4 position in pixel coordinates(0: NOT_VALID), (1: VALID),
3829	ffi_aoi_bs_table	aoi_4_pos_pix_row_start	UINT4	N/A	%u	NUMBER	0	1023	row position of AOI 4 in pixel coordinates
3830	ffi_aoi_bs_table	aoi_4_pos_pix_col_start	UINT4	N/A	%u	NUMBER	0	1023	column position of AOI 4 in pixel coordinates
3831	ffi_aoi_bs_table	aoi_4_pos_pix_size_rows	UINT4	N/A	%u	NUMBER	0	1023	row size of AOI 4 in pixel coordinates
3832	ffi_aoi_bs_table	aoi_4_pos_pix_size_cols	UINT4	N/A	%u	NUMBER	0	1023	column size of AOI 4 in pixel coordinates
3833	ffi_aoi_bs_table	aoi_4_pos_pix_aoi_fov	UINT4	N/A	%u	ENUM	0	2	indicates the position of the AOI relative to the imager FOV(0: ON_FOV), (1: PART_FOV), (2: OFF_FOV),
3834	ffi_aoi_bs_table	aoi_4_pos_crf_status	INT4	N/A	%d	ENUM	0	1	status of AOI 4 position in the camera reference frame(0: NOT_VALID), (1: VALID),
3835	ffi_aoi_bs_table	aoi_4_pos_crf_axis_u	FLOAT8	N/A	%f	NUMBER	-1	1	AOI 4 U axis position in the camera reference frame
3836	ffi_aoi_bs_table	aoi_4_pos_crf_axis_v	FLOAT8	N/A	%f	NUMBER	-1	1	AOI 4 V axis position in the camera reference frame
3837	ffi_aoi_bs_table	aoi_4_pos_crf_axis_w	FLOAT8	N/A	%f	NUMBER	-1	1	AOI 4 W axis position in the camera reference frame
3838	ffi_aoi_bs_table	aoi_4_calc_type	UINT4	N/A	%u	ENUM	0	2	kind of calculation performed on AOI 4(0: OFF), (1: CENTROID), (2: LIMB),
3839	ffi_aoi_bs_table	aoi_4_calc_prio	UINT4	N/A	%u	ENUM	1	4	priority of calculation on AOI 4(1: HIGHEST), (2: HIGH), (3: LOW), (4: LOWEST),
3840	ffi_aoi_bs_table	aoi_4_calc_threshold	FLOAT4	N/A	%f	NUMBER	0	1	current threshold value for centroid or limb calculation
3841	ffi_aoi_bs_table	aoi_4_calc_par_range	FLOAT4	pixels	%f	NUMBER	0	100	current range limit value for centroid calculation
3842	ffi_aoi_bs_table	aoi_4_corr_darkfield	UINT4	N/A	%u	ENUM	0	1	indicates whether darkfield correction is used during centroid/limb and AOI position calculation(0: OFF), (1: ON),
3843	ffi_aoi_bs_table	aoi_4_corr_flatfield	UINT4	N/A	%u	ENUM	0	1	indicates whether flatfield correction is used during centroid/limb and AOI position calculation(0: OFF), (1: ON),
3844	ffi_aoi_bs_table	aoi_4_corr_distortion	UINT4	N/A	%u	ENUM	0	1	indicates whether distortion correction is used during centroid/limb and AOI position calculation(0: OFF), (1: ON),
3845	ffi_aoi_bs_table	aoi_5_aoi_state	INT4	N/A	%d	ENUM	0	1	indicates whether the AOI is defined on the specified image or cleared(0: CLEARED), (1: DEFINED),
3846	ffi_aoi_bs_table	aoi_5_aoi_snr	UINT4	N/A	%u	NUMBER	0	999	serial number of AOI 5
3847	ffi_aoi_bs_table	aoi_5_aoi_size_rows	UINT4	N/A	%u	NUMBER	0	150	size of AOI 5 in pixel row values
3848	ffi_aoi_bs_table	aoi_5_aoi_size_cols	UINT4	N/A	%u	NUMBER	0	150	size of AOI 5 in pixel column values
3849	ffi_aoi_bs_table	aoi_5_pos_pix_status	UINT4	N/A	%u	ENUM	0	1	status of AOI 5 position in pixel coordinates(0: NOT_VALID), (1: VALID),
3850	ffi_aoi_bs_table	aoi_5_pos_pix_row_start	UINT4	N/A	%u	NUMBER	0	1023	row position of AOI 5 in pixel coordinates
3851	ffi_aoi_bs_table	aoi_5_pos_pix_col_start	UINT4	N/A	%u	NUMBER	0	1023	column position of AOI 5 in pixel coordinates
3852	ffi_aoi_bs_table	aoi_5_pos_pix_size_rows	UINT4	N/A	%u	NUMBER	0	1023	row size of AOI 5 in pixel coordinates
3853	ffi_aoi_bs_table	aoi_5_pos_pix_size_cols	UINT4	N/A	%u	NUMBER	0	1023	column size of AOI 5 in pixel coordinates

	A	B	C	D	E	F	G	H	I
3854	ffi_aoi_bs_table	aoi_5_pos_pix_aoi_fov	UINT4	N/A	%u	ENUM	0	2	indicates the position of the AOI relative to the imager FOV(0: ON_FOV), (1: PART_FOV), (2: OFF_FOV),
3855	ffi_aoi_bs_table	aoi_5_pos_crf_status	INT4	N/A	%d	ENUM	0	1	status of AOI 5 position in the camera reference frame(0: NOT_VALID), (1: VALID),
3856	ffi_aoi_bs_table	aoi_5_pos_crf_axis_u	FLOAT8	N/A	%f	NUMBER	-1	1	AOI 5 U axis position in the camera reference frame
3857	ffi_aoi_bs_table	aoi_5_pos_crf_axis_v	FLOAT8	N/A	%f	NUMBER	-1	1	AOI 5 V axis position in the camera reference frame
3858	ffi_aoi_bs_table	aoi_5_pos_crf_axis_w	FLOAT8	N/A	%f	NUMBER	-1	1	AOI 5 W axis position in the camera reference frame
3859	ffi_aoi_bs_table	aoi_5_calc_type	UINT4	N/A	%u	ENUM	0	2	kind of calculation performed on AOI 5(0: OFF), (1: CENTROID), (2: LIMB),
3860	ffi_aoi_bs_table	aoi_5_calc_prio	UINT4	N/A	%u	ENUM	1	4	priority of calculation on AOI 5(1: HIGHEST), (2: HIGH), (3: LOW), (4: LOWEST),
3861	ffi_aoi_bs_table	aoi_5_calc_threshold	FLOAT4	N/A	%f	NUMBER	0	1	current threshold value for centroid or limb calculation
3862	ffi_aoi_bs_table	aoi_5_calc_par_range	FLOAT4	pixels	%f	NUMBER	0	100	current range limit value for centroid calculation
3863	ffi_aoi_bs_table	aoi_5_corr_darkfield	UINT4	N/A	%u	ENUM	0	1	indicates whether darkfield correction is used during centroid/limb and AOI position calculation(0: OFF), (1: ON),
3864	ffi_aoi_bs_table	aoi_5_corr_flatfield	UINT4	N/A	%u	ENUM	0	1	indicates whether flatfield correction is used during centroid/limb and AOI position calculation(0: OFF), (1: ON),
3865	ffi_aoi_bs_table	aoi_5_corr_distortion	UINT4	N/A	%u	ENUM	0	1	indicates whether distortion correction is used during centroid/limb and AOI position calculation(0: OFF), (1: ON),
3866	ffi_aoi_bs_table	aoi_6_aoi_state	INT4	N/A	%d	ENUM	0	1	indicates whether the AOI is defined on the specified image or cleared(0: CLEARED), (1: DEFINED),
3867	ffi_aoi_bs_table	aoi_6_aoi_snr	UINT4	N/A	%u	NUMBER	0	999	serial number of AOI 6
3868	ffi_aoi_bs_table	aoi_6_aoi_size_rows	UINT4	N/A	%u	NUMBER	0	150	size of AOI 6 in pixel row values
3869	ffi_aoi_bs_table	aoi_6_aoi_size_cols	UINT4	N/A	%u	NUMBER	0	150	size of AOI 6 in pixel column values
3870	ffi_aoi_bs_table	aoi_6_pos_pix_status	UINT4	N/A	%u	ENUM	0	1	status of AOI 6 position in pixel coordinates(0: NOT_VALID), (1: VALID),
3871	ffi_aoi_bs_table	aoi_6_pos_pix_row_start	UINT4	N/A	%u	NUMBER	0	1023	row position of AOI 6 in pixel coordinates
3872	ffi_aoi_bs_table	aoi_6_pos_pix_col_start	UINT4	N/A	%u	NUMBER	0	1023	column position of AOI 6 in pixel coordinates
3873	ffi_aoi_bs_table	aoi_6_pos_pix_size_rows	UINT4	N/A	%u	NUMBER	0	1023	row size of AOI 6 in pixel coordinates
3874	ffi_aoi_bs_table	aoi_6_pos_pix_size_cols	UINT4	N/A	%u	NUMBER	0	1023	column size of AOI 6 in pixel coordinates
3875	ffi_aoi_bs_table	aoi_6_pos_pix_aoi_fov	UINT4	N/A	%u	ENUM	0	2	indicates the position of the AOI relative to the imager FOV(0: ON_FOV), (1: PART_FOV), (2: OFF_FOV),
3876	ffi_aoi_bs_table	aoi_6_pos_crf_status	INT4	N/A	%d	ENUM	0	1	status of AOI 6 position in the camera reference frame(0: NOT_VALID), (1: VALID),
3877	ffi_aoi_bs_table	aoi_6_pos_crf_axis_u	FLOAT8	N/A	%f	NUMBER	-1	1	AOI 6 U axis position in the camera reference frame
3878	ffi_aoi_bs_table	aoi_6_pos_crf_axis_v	FLOAT8	N/A	%f	NUMBER	-1	1	AOI 6 V axis position in the camera reference frame
3879	ffi_aoi_bs_table	aoi_6_pos_crf_axis_w	FLOAT8	N/A	%f	NUMBER	-1	1	AOI 6 W axis position in the camera reference frame
3880	ffi_aoi_bs_table	aoi_6_calc_type	UINT4	N/A	%u	ENUM	0	2	kind of calculation performed on AOI 6(0: OFF), (1: CENTROID), (2: LIMB),
3881	ffi_aoi_bs_table	aoi_6_calc_prio	UINT4	N/A	%u	ENUM	1	4	priority of calculation on AOI 6(1: HIGHEST), (2: HIGH), (3: LOW), (4: LOWEST),
3882	ffi_aoi_bs_table	aoi_6_calc_threshold	FLOAT4	N/A	%f	NUMBER	0	1	current threshold value for centroid or limb calculation
3883	ffi_aoi_bs_table	aoi_6_calc_par_range	FLOAT4	pixels	%f	NUMBER	0	100	current range limit value for centroid calculation
3884	ffi_aoi_bs_table	aoi_6_corr_darkfield	UINT4	N/A	%u	ENUM	0	1	indicates whether darkfield correction is used during centroid/limb and AOI position calculation(0: OFF), (1: ON),
3885	ffi_aoi_bs_table	aoi_6_corr_flatfield	UINT4	N/A	%u	ENUM	0	1	indicates whether flatfield correction is used during centroid/limb and AOI position calculation(0: OFF), (1: ON),

	A	B	C	D	E	F	G	H	I
3886	ffi_aoi_bs_table	aoi_6_corr_distortion	UINT4	N/A	%u	ENUM	0	1	indicates whether distortion correction is used during centroid/limb and AOI position calculation(0: OFF), (1: ON),
3887	ffi_aoi_bs_table	aoi_7_aoi_state	INT4	N/A	%d	ENUM	0	1	indicates whether the AOI is defined on the specified image or cleared(0: CLEARED), (1: DEFINED),
3888	ffi_aoi_bs_table	aoi_7_aoi_snr	UINT4	N/A	%u	NUMBER	0	999	serial number of AOI 7
3889	ffi_aoi_bs_table	aoi_7_aoi_size_rows	UINT4	N/A	%u	NUMBER	0	150	size of AOI 7 in pixel row values
3890	ffi_aoi_bs_table	aoi_7_aoi_size_cols	UINT4	N/A	%u	NUMBER	0	150	size of AOI 7 in pixel column values
3891	ffi_aoi_bs_table	aoi_7_pos_pix_status	UINT4	N/A	%u	ENUM	0	1	status of AOI 7 position in pixel coordinates(0: NOT_VALID), (1: VALID),
3892	ffi_aoi_bs_table	aoi_7_pos_pix_row_start	UINT4	N/A	%u	NUMBER	0	1023	row position of AOI 7 in pixel coordinates
3893	ffi_aoi_bs_table	aoi_7_pos_pix_col_start	UINT4	N/A	%u	NUMBER	0	1023	column position of AOI 7 in pixel coordinates
3894	ffi_aoi_bs_table	aoi_7_pos_pix_size_rows	UINT4	N/A	%u	NUMBER	0	1023	row size of AOI 7 in pixel coordinates
3895	ffi_aoi_bs_table	aoi_7_pos_pix_size_cols	UINT4	N/A	%u	NUMBER	0	1023	column size of AOI 7 in pixel coordinates
3896	ffi_aoi_bs_table	aoi_7_pos_pix_aoi_fov	UINT4	N/A	%u	ENUM	0	2	indicates the position of the AOI relative to the imager FOV(0: ON_FOV), (1: PART_FOV), (2: OFF_FOV),
3897	ffi_aoi_bs_table	aoi_7_pos_crf_status	INT4	N/A	%d	ENUM	0	1	status of AOI 7 position in the camera reference frame(0: NOT_VALID), (1: VALID),
3898	ffi_aoi_bs_table	aoi_7_pos_crf_axis_u	FLOAT8	N/A	%f	NUMBER	-1	1	AOI 7 U axis position in the camera reference frame
3899	ffi_aoi_bs_table	aoi_7_pos_crf_axis_v	FLOAT8	N/A	%f	NUMBER	-1	1	AOI 7 V axis position in the camera reference frame
3900	ffi_aoi_bs_table	aoi_7_pos_crf_axis_w	FLOAT8	N/A	%f	NUMBER	-1	1	AOI 7 W axis position in the camera reference frame
3901	ffi_aoi_bs_table	aoi_7_calc_type	UINT4	N/A	%u	ENUM	0	2	kind of calculation performed on AOI 7(0: OFF), (1: CENTROID), (2: LIMB),
3902	ffi_aoi_bs_table	aoi_7_calc_prio	UINT4	N/A	%u	ENUM	1	4	priority of calculation on AOI 7(1: HIGHEST), (2: HIGH), (3: LOW), (4: LOWEST),
3903	ffi_aoi_bs_table	aoi_7_calc_threshold	FLOAT4	N/A	%f	NUMBER	0	1	current threshold value for centroid or limb calculation
3904	ffi_aoi_bs_table	aoi_7_calc_par_range	FLOAT4	pixels	%f	NUMBER	0	100	current range limit value for centroid calculation
3905	ffi_aoi_bs_table	aoi_7_corr_darkfield	UINT4	N/A	%u	ENUM	0	1	indicates whether darkfield correction is used during centroid/limb and AOI position calculation(0: OFF), (1: ON),
3906	ffi_aoi_bs_table	aoi_7_corr_flatfield	UINT4	N/A	%u	ENUM	0	1	indicates whether flatfield correction is used during centroid/limb and AOI position calculation(0: OFF), (1: ON),
3907	ffi_aoi_bs_table	aoi_7_corr_distortion	UINT4	N/A	%u	ENUM	0	1	indicates whether distortion correction is used during centroid/limb and AOI position calculation(0: OFF), (1: ON),
3908	ffi_aoi_bs_table	aoi_8_aoi_state	INT4	N/A	%d	ENUM	0	1	indicates whether the AOI is defined on the specified image or cleared(0: CLEARED), (1: DEFINED),
3909	ffi_aoi_bs_table	aoi_8_aoi_snr	UINT4	N/A	%u	NUMBER	0	999	serial number of AOI 8
3910	ffi_aoi_bs_table	aoi_8_aoi_size_rows	UINT4	N/A	%u	NUMBER	0	150	size of AOI 8 in pixel row values
3911	ffi_aoi_bs_table	aoi_8_aoi_size_cols	UINT4	N/A	%u	NUMBER	0	150	size of AOI 8 in pixel column values
3912	ffi_aoi_bs_table	aoi_8_pos_pix_status	UINT4	N/A	%u	ENUM	0	1	status of AOI 8 position in pixel coordinates(0: NOT_VALID), (1: VALID),
3913	ffi_aoi_bs_table	aoi_8_pos_pix_row_start	UINT4	N/A	%u	NUMBER	0	1023	row position of AOI 8 in pixel coordinates
3914	ffi_aoi_bs_table	aoi_8_pos_pix_col_start	UINT4	N/A	%u	NUMBER	0	1023	column position of AOI 8 in pixel coordinates
3915	ffi_aoi_bs_table	aoi_8_pos_pix_size_rows	UINT4	N/A	%u	NUMBER	0	1023	row size of AOI 8 in pixel coordinates
3916	ffi_aoi_bs_table	aoi_8_pos_pix_size_cols	UINT4	N/A	%u	NUMBER	0	1023	column size of AOI 8 in pixel coordinates
3917	ffi_aoi_bs_table	aoi_8_pos_pix_aoi_fov	UINT4	N/A	%u	ENUM	0	2	indicates the position of the AOI relative to the imager FOV(0: ON_FOV), (1: PART_FOV), (2: OFF_FOV),
3918	ffi_aoi_bs_table	aoi_8_pos_crf_status	INT4	N/A	%d	ENUM	0	1	status of AOI 8 position in the camera reference frame(0: NOT_VALID), (1: VALID),

	A	B	C	D	E	F	G	H	I
3919	ffi_aoi_bs_table	aoi_8_pos_crf_axis_u	FLOAT8	N/A	%f	NUMBER	-1	1	AOI 8 U axis position in the camera reference frame
3920	ffi_aoi_bs_table	aoi_8_pos_crf_axis_v	FLOAT8	N/A	%f	NUMBER	-1	1	AOI 8 V axis position in the camera reference frame
3921	ffi_aoi_bs_table	aoi_8_pos_crf_axis_w	FLOAT8	N/A	%f	NUMBER	-1	1	AOI 8 W axis position in the camera reference frame
3922	ffi_aoi_bs_table	aoi_8_calc_type	UINT4	N/A	%u	ENUM	0	2	kind of calculation performed on AOI 8(0: OFF), (1: CENTROID), (2: LIMB),
3923	ffi_aoi_bs_table	aoi_8_calc_prio	UINT4	N/A	%u	ENUM	1	4	priority of calculation on AOI 8(1: HIGHEST), (2: HIGH), (3: LOW), (4: LOWEST),
3924	ffi_aoi_bs_table	aoi_8_calc_threshold	FLOAT4	N/A	%f	NUMBER	0	1	current threshold value for centroid or limb calculation
3925	ffi_aoi_bs_table	aoi_8_calc_par_range	FLOAT4	pixels	%f	NUMBER	0	100	current range limit value for centroid calculation
3926	ffi_aoi_bs_table	aoi_8_corr_darkfield	UINT4	N/A	%u	ENUM	0	1	indicates whether darkfield correction is used during centroid/limb and AOI position calculation(0: OFF), (1: ON),
3927	ffi_aoi_bs_table	aoi_8_corr_flatfield	UINT4	N/A	%u	ENUM	0	1	indicates whether flatfield correction is used during centroid/limb and AOI position calculation(0: OFF), (1: ON),
3928	ffi_aoi_bs_table	aoi_8_corr_distortion	UINT4	N/A	%u	ENUM	0	1	indicates whether distortion correction is used during centroid/limb and AOI position calculation(0: OFF), (1: ON),
3929	fpi_control_table								table used by the FPI camera processor for various functions
3930	fpi_control_table	packet	BINARY	N/A	%s	NUMBER			data packet as it was received from the TA
3931	fpi_control_table	pkt_timestamp	TIME8	seconds	%d.%09d	NUMBER	0	2147483647	time data packet was constructed by TA
3932	fpi_control_table	timestamp	TIME8	seconds	%d.%09d	NUMBER	0	2147483647	time at which the event happened or was captured
3933	fpi_control_table	table_id	UINT4	N/A	%u	NUMBER	0	4294967295	ID of the current table
3934	fpi_control_table	status_buf_a	UINT4	N/A	%u	ENUM	0	4	reports current status of image buffer A(0: IDLE), (1: DATA_IN), (2: CALC), (3: CALC_DATA_OUT), (4: DATA_OUT),
3935	fpi_control_table	status_buf_b	UINT4	N/A	%u	ENUM	0	4	reports current status of image buffer B(0: IDLE), (1: DATA_IN), (2: CALC), (3: CALC_DATA_OUT), (4: DATA_OUT),
3936	fpi_control_table	status_buf_c	UINT4	N/A	%u	ENUM	0	4	reports current status of image buffer C(0: IDLE), (1: DATA_IN), (2: CALC), (3: CALC_DATA_OUT), (4: DATA_OUT),
3937	fpi_control_table	calc_state	UINT4	N/A	%u	ENUM	0	4	reports detailed status of calculation(0: IDLE), (1: AOI_BS_REQ), (2: DATA_SORT), (3: CENTR_CALC_LIMB_CALC_WORK), (4: DARKFIELD_CALC_WORK),
3938	fpi_control_table	img_in_buf_a	INT4	N/A	%d	NUMBER	0	39999	reports the ID of the image in buffer A
3939	fpi_control_table	img_in_buf_b	INT4	N/A	%d	NUMBER	0	39999	reports the ID of the image in buffer B
3940	fpi_control_table	img_in_buf_c	INT4	N/A	%d	NUMBER	0	39999	reports the ID of the image in buffer C
3941	fpi_control_table	cyc_mode	UINT4	N/A	%u	ENUM	0	4	specifies mode of processing for the next image transferred(0: IDLE), (1: MONITOR), (2: NORMAL), (3: DARK_AQC), (4: TEST),
3942	fpi_control_table	dark_num	UINT4	N/A	%u	NUMBER	1	20	desired number of images used for calculation of darkfield image by averaging
3943	fpi_control_table	dark_cnt	UINT4	N/A	%u	NUMBER	0	20	current counter status
3944	fpi_control_table	img_trans_size	UINT4	N/A	%u	NUMBER	0	4294967295	image size (in bytes) for the next image transfer
3945	fpi_control_table	pixel_fmt	INT4	N/A	%d	ENUM	0	1	pixel format for the next image transferred(0: 8_BIT), (1: 14_BIT),
3946	fpi_control_table	pixel_grp	INT4	N/A	%d	ENUM	0	2	pixel grouping for the next image transferred(0: 1x1), (1: 2x2), (2: 4x4),
3947	fpi_control_table	next_expo_sn	INT4	N/A	%d	NUMBER	10000	39999	image ID which will be assigned to the next image after start of exposure
3948	fpi_aoi_bs_table								table for FPI AOI boresight information
3949	fpi_aoi_bs_table	packet	BINARY	N/A	%s	NUMBER			data packet as it was received from the TA

	A	B	C	D	E	F	G	H	I
3950	fpi_aoi_bs_table	pkt_timestamp	TIME8	seconds	%d.%09d	NUMBER	0	2147483647	time data packet was constructed by TA
3951	fpi_aoi_bs_table	timestamp	TIME8	seconds	%d.%09d	NUMBER	0	2147483647	time at which the event happened or was captured
3952	fpi_aoi_bs_table	table_id	UINT4	N/A	%u	NUMBER	0	4294967295	ID of the current table
3953	fpi_aoi_bs_table	buffer_id	UINT4	N/A	%u	ENUM	0	2	specifies buffer containing the image referring to the AOIs in this table(0: A), (1: B), (2: C),
3954	fpi_aoi_bs_table	image_snr	INT4	N/A	%d	NUMBER	0	39999	serial number of the image referring to the data in this table
3955	fpi_aoi_bs_table	exp_time	INT4	milliseconds	%d	NUMBER	10	10000	duration of exposure period
3956	fpi_aoi_bs_table	pixel_fmt	INT4	N/A	%d	ENUM	0	1	pixel format of image data in specified buffer(0: 8_BIT), (1: 14_BIT),
3957	fpi_aoi_bs_table	pixel_grp	INT4	N/A	%d	ENUM	0	2	pixel grouping of image data in specified buffer(0: 1x1), (1: 2x2), (2: 4x4),
3958	fpi_aoi_bs_table	filter_pos	INT4	N/A	%d	ENUM	-1	6	filter position(-1: UNDEFINED), (0: HOME), (1: CLOSED), (2: FILTER_1), (3: FILTER_2), (4: FILTER_3), (5: FILTER_4), (6: FILTER_5),
3959	fpi_aoi_bs_table	focus_pos	FLOAT8	millimeters	%lf	NUMBER	0	600	focus position (only valid for FPI)
3960	fpi_aoi_bs_table	focal_len	FLOAT4	millimeters	%f	NUMBER	100	100000	focal length of camera optics
3961	fpi_aoi_bs_table	reticle	FLOAT8	N/A	%lf	NUMBER	0	1	reticle brightness (only valid for FPI)
3962	fpi_aoi_bs_table	bs_snr	UINT4	N/A	%u	NUMBER	0	999	boresight serial number
3963	fpi_aoi_bs_table	bs_pix_state	INT4	N/A	%d	ENUM	0	1	status of boresight raw pixel image position data(0: NOT_VALID), (1: VALID),
3964	fpi_aoi_bs_table	bs_pix_pos_row	FLOAT4	N/A	%f	NUMBER	0	1023	boresight row position in raw pixel image coordinates
3965	fpi_aoi_bs_table	bs_pix_pos_col	FLOAT4	N/A	%f	NUMBER	0	1023	boresight column position in raw pixel image coordinates
3966	fpi_aoi_bs_table	bs_crf_status	INT4	N/A	%d	ENUM	0	1	status of boresight CRF position data(0: NOT_VALID), (1: VALID),
3967	fpi_aoi_bs_table	bs_crf_axis_u	FLOAT8	N/A	%f	NUMBER	-1	1	boresight u axis position in camera reference frame
3968	fpi_aoi_bs_table	bs_crf_axis_v	FLOAT8	N/A	%f	NUMBER	-1	1	boresight v axis position in camera reference frame
3969	fpi_aoi_bs_table	bs_crf_axis_w	FLOAT8	N/A	%f	NUMBER	-1	1	boresight w axis position in camera reference frame
3970	fpi_aoi_bs_table	aoi_1_aoi_state	INT4	N/A	%d	ENUM	0	1	indicates whether the AOI is defined on the specified image or cleared(0: CLEARED), (1: DEFINED),
3971	fpi_aoi_bs_table	aoi_1_aoi_snr	UINT4	N/A	%u	NUMBER	0	999	serial number of AOI 1
3972	fpi_aoi_bs_table	aoi_1_aoi_size_rows	UINT4	N/A	%u	NUMBER	0	150	size of AOI 1 in pixel row values
3973	fpi_aoi_bs_table	aoi_1_aoi_size_cols	UINT4	N/A	%u	NUMBER	0	150	size of AOI 1 in pixel column values
3974	fpi_aoi_bs_table	aoi_1_pos_pix_status	UINT4	N/A	%u	ENUM	0	1	status of AOI 1 position in pixel coordinates(0: NOT_VALID), (1: VALID),
3975	fpi_aoi_bs_table	aoi_1_pos_pix_row_start	UINT4	N/A	%u	NUMBER	0	1023	row position of AOI 1 in pixel coordinates
3976	fpi_aoi_bs_table	aoi_1_pos_pix_col_start	UINT4	N/A	%u	NUMBER	0	1023	column position of AOI 1 in pixel coordinates
3977	fpi_aoi_bs_table	aoi_1_pos_pix_size_rows	UINT4	N/A	%u	NUMBER	0	1023	row size of AOI 1 in pixel coordinates
3978	fpi_aoi_bs_table	aoi_1_pos_pix_size_cols	UINT4	N/A	%u	NUMBER	0	1023	column size of AOI 1 in pixel coordinates
3979	fpi_aoi_bs_table	aoi_1_pos_pix_aoi_fov	UINT4	N/A	%u	ENUM	0	2	indicates the position of the AOI relative to the imager FOV(0: ON_FOV), (1: PART_FOV), (2: OFF_FOV),
3980	fpi_aoi_bs_table	aoi_1_pos_crf_status	INT4	N/A	%d	ENUM	0	1	status of AOI 1 position in the camera reference frame(0: NOT_VALID), (1: VALID),
3981	fpi_aoi_bs_table	aoi_1_pos_crf_axis_u	FLOAT8	N/A	%f	NUMBER	-1	1	AOI 1 U axis position in the camera reference frame
3982	fpi_aoi_bs_table	aoi_1_pos_crf_axis_v	FLOAT8	N/A	%f	NUMBER	-1	1	AOI 1 V axis position in the camera reference frame

	A	B	C	D	E	F	G	H	I
3983	fpi_aoi_bs_table	aoi_1_pos_crf_axis_w	FLOAT8	N/A	%f	NUMBER	-1	1	AOI 1 W axis position in the camera reference frame
3984	fpi_aoi_bs_table	aoi_1_calc_type	UINT4	N/A	%u	ENUM	0	2	kind of calculation performed on AOI 1(0: OFF), (1: CENTROID), (2: LIMB),
3985	fpi_aoi_bs_table	aoi_1_calc_prio	UINT4	N/A	%u	ENUM	1	4	priority of calculation on AOI 1(1: HIGHEST), (2: HIGH), (3: LOW), (4: LOWEST),
3986	fpi_aoi_bs_table	aoi_1_calc_threshold	FLOAT4	N/A	%f	NUMBER	0	1	current threshold value for centroid or limb calculation
3987	fpi_aoi_bs_table	aoi_1_calc_par_range	FLOAT4	pixels	%f	NUMBER	0	100	current range limit value for centroid calculation
3988	fpi_aoi_bs_table	aoi_1_corr_darkfield	UINT4	N/A	%u	ENUM	0	1	indicates whether darkfield correction is used during centroid/limb and AOI position calculation(0: OFF), (1: ON),
3989	fpi_aoi_bs_table	aoi_1_corr_flatfield	UINT4	N/A	%u	ENUM	0	1	indicates whether flatfield correction is used during centroid/limb and AOI position calculation(0: OFF), (1: ON),
3990	fpi_aoi_bs_table	aoi_1_corr_distortion	UINT4	N/A	%u	ENUM	0	1	indicates whether distortion correction is used during centroid/limb and AOI position calculation(0: OFF), (1: ON),
3991	fpi_aoi_bs_table	aoi_2_aoi_state	INT4	N/A	%d	ENUM	0	1	indicates whether the AOI is defined on the specified image or cleared(0: CLEARED), (1: DEFINED),
3992	fpi_aoi_bs_table	aoi_2_aoi_snr	UINT4	N/A	%u	NUMBER	0	999	serial number of AOI 2
3993	fpi_aoi_bs_table	aoi_2_aoi_size_rows	UINT4	N/A	%u	NUMBER	0	150	size of AOI 2 in pixel row values
3994	fpi_aoi_bs_table	aoi_2_aoi_size_cols	UINT4	N/A	%u	NUMBER	0	150	size of AOI 2 in pixel column values
3995	fpi_aoi_bs_table	aoi_2_pos_pix_status	UINT4	N/A	%u	ENUM	0	1	status of AOI 2 position in pixel coordinates(0: NOT_VALID), (1: VALID),
3996	fpi_aoi_bs_table	aoi_2_pos_pix_row_start	UINT4	N/A	%u	NUMBER	0	1023	row position of AOI 2 in pixel coordinates
3997	fpi_aoi_bs_table	aoi_2_pos_pix_col_start	UINT4	N/A	%u	NUMBER	0	1023	column position of AOI 2 in pixel coordinates
3998	fpi_aoi_bs_table	aoi_2_pos_pix_size_rows	UINT4	N/A	%u	NUMBER	0	1023	row size of AOI 2 in pixel coordinates
3999	fpi_aoi_bs_table	aoi_2_pos_pix_size_cols	UINT4	N/A	%u	NUMBER	0	1023	column size of AOI 2 in pixel coordinates
4000	fpi_aoi_bs_table	aoi_2_pos_pix_aoi_fov	UINT4	N/A	%u	ENUM	0	2	indicates the position of the AOI relative to the imager FOV(0: ON_FOV), (1: PART_FOV), (2: OFF_FOV),
4001	fpi_aoi_bs_table	aoi_2_pos_crf_status	INT4	N/A	%d	ENUM	0	1	status of AOI 2 position in the camera reference frame(0: NOT_VALID), (1: VALID),
4002	fpi_aoi_bs_table	aoi_2_pos_crf_axis_u	FLOAT8	N/A	%f	NUMBER	-1	1	AOI 2 U axis position in the camera reference frame
4003	fpi_aoi_bs_table	aoi_2_pos_crf_axis_v	FLOAT8	N/A	%f	NUMBER	-1	1	AOI 2 V axis position in the camera reference frame
4004	fpi_aoi_bs_table	aoi_2_pos_crf_axis_w	FLOAT8	N/A	%f	NUMBER	-1	1	AOI 2 W axis position in the camera reference frame
4005	fpi_aoi_bs_table	aoi_2_calc_type	UINT4	N/A	%u	ENUM	0	2	kind of calculation performed on AOI 2(0: OFF), (1: CENTROID), (2: LIMB),
4006	fpi_aoi_bs_table	aoi_2_calc_prio	UINT4	N/A	%u	ENUM	1	4	priority of calculation on AOI 2(1: HIGHEST), (2: HIGH), (3: LOW), (4: LOWEST),
4007	fpi_aoi_bs_table	aoi_2_calc_threshold	FLOAT4	N/A	%f	NUMBER	0	1	current threshold value for centroid or limb calculation
4008	fpi_aoi_bs_table	aoi_2_calc_par_range	FLOAT4	pixels	%f	NUMBER	0	100	current range limit value for centroid calculation
4009	fpi_aoi_bs_table	aoi_2_corr_darkfield	UINT4	N/A	%u	ENUM	0	1	indicates whether darkfield correction is used during centroid/limb and AOI position calculation(0: OFF), (1: ON),
4010	fpi_aoi_bs_table	aoi_2_corr_flatfield	UINT4	N/A	%u	ENUM	0	1	indicates whether flatfield correction is used during centroid/limb and AOI position calculation(0: OFF), (1: ON),
4011	fpi_aoi_bs_table	aoi_2_corr_distortion	UINT4	N/A	%u	ENUM	0	1	indicates whether distortion correction is used during centroid/limb and AOI position calculation(0: OFF), (1: ON),
4012	fpi_aoi_bs_table	aoi_3_aoi_state	INT4	N/A	%d	ENUM	0	1	indicates whether the AOI is defined on the specified image or cleared(0: CLEARED), (1: DEFINED),
4013	fpi_aoi_bs_table	aoi_3_aoi_snr	UINT4	N/A	%u	NUMBER	0	999	serial number of AOI 3
4014	fpi_aoi_bs_table	aoi_3_aoi_size_rows	UINT4	N/A	%u	NUMBER	0	150	size of AOI 3 in pixel row values
4015	fpi_aoi_bs_table	aoi_3_aoi_size_cols	UINT4	N/A	%u	NUMBER	0	150	size of AOI 3 in pixel column values

	A	B	C	D	E	F	G	H	I
4016	fpi_aoi_bs_table	aoi_3_pos_pix_status	UINT4	N/A	%u	ENUM	0	1	status of AOI 3 position in pixel coordinates(0: NOT_VALID), (1: VALID),
4017	fpi_aoi_bs_table	aoi_3_pos_pix_row_start	UINT4	N/A	%u	NUMBER	0	1023	row position of AOI 3 in pixel coordinates
4018	fpi_aoi_bs_table	aoi_3_pos_pix_col_start	UINT4	N/A	%u	NUMBER	0	1023	column position of AOI 3 in pixel coordinates
4019	fpi_aoi_bs_table	aoi_3_pos_pix_size_rows	UINT4	N/A	%u	NUMBER	0	1023	row size of AOI 3 in pixel coordinates
4020	fpi_aoi_bs_table	aoi_3_pos_pix_size_cols	UINT4	N/A	%u	NUMBER	0	1023	column size of AOI 3 in pixel coordinates
4021	fpi_aoi_bs_table	aoi_3_pos_pix_aoi_fov	UINT4	N/A	%u	ENUM	0	2	indicates the position of the AOI relative to the imager FOV(0: ON_FOV), (1: PART_FOV), (2: OFF_FOV),
4022	fpi_aoi_bs_table	aoi_3_pos_crf_status	INT4	N/A	%d	ENUM	0	1	status of AOI 3 position in the camera reference frame(0: NOT_VALID), (1: VALID),
4023	fpi_aoi_bs_table	aoi_3_pos_crf_axis_u	FLOAT8	N/A	%f	NUMBER	-1	1	AOI 3 U axis position in the camera reference frame
4024	fpi_aoi_bs_table	aoi_3_pos_crf_axis_v	FLOAT8	N/A	%f	NUMBER	-1	1	AOI 3 V axis position in the camera reference frame
4025	fpi_aoi_bs_table	aoi_3_pos_crf_axis_w	FLOAT8	N/A	%f	NUMBER	-1	1	AOI 3 W axis position in the camera reference frame
4026	fpi_aoi_bs_table	aoi_3_calc_type	UINT4	N/A	%u	ENUM	0	2	kind of calculation performed on AOI 3(0: OFF), (1: CENTROID), (2: LIMB),
4027	fpi_aoi_bs_table	aoi_3_calc_prio	UINT4	N/A	%u	ENUM	1	4	priority of calculation on AOI 3(1: HIGHEST), (2: HIGH), (3: LOW), (4: LOWEST),
4028	fpi_aoi_bs_table	aoi_3_calc_threshold	FLOAT4	N/A	%f	NUMBER	0	1	current threshold value for centroid or limb calculation
4029	fpi_aoi_bs_table	aoi_3_calc_par_range	FLOAT4	pixels	%f	NUMBER	0	100	current range limit value for centroid calculation
4030	fpi_aoi_bs_table	aoi_3_corr_darkfield	UINT4	N/A	%u	ENUM	0	1	indicates whether darkfield correction is used during centroid/limb and AOI position calculation(0: OFF), (1: ON),
4031	fpi_aoi_bs_table	aoi_3_corr_flatfield	UINT4	N/A	%u	ENUM	0	1	indicates whether flatfield correction is used during centroid/limb and AOI position calculation(0: OFF), (1: ON),
4032	fpi_aoi_bs_table	aoi_3_corr_distortion	UINT4	N/A	%u	ENUM	0	1	indicates whether distortion correction is used during centroid/limb and AOI position calculation(0: OFF), (1: ON),
4033	fpi_aoi_bs_table	aoi_4_aoi_state	INT4	N/A	%d	ENUM	0	1	indicates whether the AOI is defined on the specified image or cleared(0: CLEARED), (1: DEFINED),
4034	fpi_aoi_bs_table	aoi_4_aoi_snr	UINT4	N/A	%u	NUMBER	0	999	serial number of AOI 4
4035	fpi_aoi_bs_table	aoi_4_aoi_size_rows	UINT4	N/A	%u	NUMBER	0	150	size of AOI 4 in pixel row values
4036	fpi_aoi_bs_table	aoi_4_aoi_size_cols	UINT4	N/A	%u	NUMBER	0	150	size of AOI 4 in pixel column values
4037	fpi_aoi_bs_table	aoi_4_pos_pix_status	UINT4	N/A	%u	ENUM	0	1	status of AOI 4 position in pixel coordinates(0: NOT_VALID), (1: VALID),
4038	fpi_aoi_bs_table	aoi_4_pos_pix_row_start	UINT4	N/A	%u	NUMBER	0	1023	row position of AOI 4 in pixel coordinates
4039	fpi_aoi_bs_table	aoi_4_pos_pix_col_start	UINT4	N/A	%u	NUMBER	0	1023	column position of AOI 4 in pixel coordinates
4040	fpi_aoi_bs_table	aoi_4_pos_pix_size_rows	UINT4	N/A	%u	NUMBER	0	1023	row size of AOI 4 in pixel coordinates
4041	fpi_aoi_bs_table	aoi_4_pos_pix_size_cols	UINT4	N/A	%u	NUMBER	0	1023	column size of AOI 4 in pixel coordinates
4042	fpi_aoi_bs_table	aoi_4_pos_pix_aoi_fov	UINT4	N/A	%u	ENUM	0	2	indicates the position of the AOI relative to the imager FOV(0: ON_FOV), (1: PART_FOV), (2: OFF_FOV),
4043	fpi_aoi_bs_table	aoi_4_pos_crf_status	INT4	N/A	%d	ENUM	0	1	status of AOI 4 position in the camera reference frame(0: NOT_VALID), (1: VALID),
4044	fpi_aoi_bs_table	aoi_4_pos_crf_axis_u	FLOAT8	N/A	%f	NUMBER	-1	1	AOI 4 U axis position in the camera reference frame
4045	fpi_aoi_bs_table	aoi_4_pos_crf_axis_v	FLOAT8	N/A	%f	NUMBER	-1	1	AOI 4 V axis position in the camera reference frame
4046	fpi_aoi_bs_table	aoi_4_pos_crf_axis_w	FLOAT8	N/A	%f	NUMBER	-1	1	AOI 4 W axis position in the camera reference frame
4047	fpi_aoi_bs_table	aoi_4_calc_type	UINT4	N/A	%u	ENUM	0	2	kind of calculation performed on AOI 4(0: OFF), (1: CENTROID), (2: LIMB),
4048	fpi_aoi_bs_table	aoi_4_calc_prio	UINT4	N/A	%u	ENUM	1	4	priority of calculation on AOI 4(1: HIGHEST), (2: HIGH), (3: LOW), (4: LOWEST),

	A	B	C	D	E	F	G	H	I
4049	fpi_aoi_bs_table	aoi_4_calc_threshold	FLOAT4	N/A	%f	NUMBER	0	1	current threshold value for centroid or limb calculation
4050	fpi_aoi_bs_table	aoi_4_calc_par_range	FLOAT4	pixels	%f	NUMBER	0	100	current range limit value for centroid calculation
4051	fpi_aoi_bs_table	aoi_4_corr_darkfield	UINT4	N/A	%u	ENUM	0	1	indicates whether darkfield correction is used during centroid/limb and AOI position calculation(0: OFF), (1: ON),
4052	fpi_aoi_bs_table	aoi_4_corr_flatfield	UINT4	N/A	%u	ENUM	0	1	indicates whether flatfield correction is used during centroid/limb and AOI position calculation(0: OFF), (1: ON),
4053	fpi_aoi_bs_table	aoi_4_corr_distortion	UINT4	N/A	%u	ENUM	0	1	indicates whether distortion correction is used during centroid/limb and AOI position calculation(0: OFF), (1: ON),
4054	fpi_aoi_bs_table	aoi_5_aoi_state	INT4	N/A	%d	ENUM	0	1	indicates whether the AOI is defined on the specified image or cleared(0: CLEARED), (1: DEFINED),
4055	fpi_aoi_bs_table	aoi_5_aoi_snr	UINT4	N/A	%u	NUMBER	0	999	serial number of AOI 5
4056	fpi_aoi_bs_table	aoi_5_aoi_size_rows	UINT4	N/A	%u	NUMBER	0	150	size of AOI 5 in pixel row values
4057	fpi_aoi_bs_table	aoi_5_aoi_size_cols	UINT4	N/A	%u	NUMBER	0	150	size of AOI 5 in pixel column values
4058	fpi_aoi_bs_table	aoi_5_pos_pix_status	UINT4	N/A	%u	ENUM	0	1	status of AOI 5 position in pixel coordinates(0: NOT_VALID), (1: VALID),
4059	fpi_aoi_bs_table	aoi_5_pos_pix_row_start	UINT4	N/A	%u	NUMBER	0	1023	row position of AOI 5 in pixel coordinates
4060	fpi_aoi_bs_table	aoi_5_pos_pix_col_start	UINT4	N/A	%u	NUMBER	0	1023	column position of AOI 5 in pixel coordinates
4061	fpi_aoi_bs_table	aoi_5_pos_pix_size_rows	UINT4	N/A	%u	NUMBER	0	1023	row size of AOI 5 in pixel coordinates
4062	fpi_aoi_bs_table	aoi_5_pos_pix_size_cols	UINT4	N/A	%u	NUMBER	0	1023	column size of AOI 5 in pixel coordinates
4063	fpi_aoi_bs_table	aoi_5_pos_pix_aoi_fov	UINT4	N/A	%u	ENUM	0	2	indicates the position of the AOI relative to the imager FOV(0: ON_FOV), (1: PART_FOV), (2: OFF_FOV),
4064	fpi_aoi_bs_table	aoi_5_pos_crf_status	INT4	N/A	%d	ENUM	0	1	status of AOI 5 position in the camera reference frame(0: NOT_VALID), (1: VALID),
4065	fpi_aoi_bs_table	aoi_5_pos_crf_axis_u	FLOAT8	N/A	%f	NUMBER	-1	1	AOI 5 U axis position in the camera reference frame
4066	fpi_aoi_bs_table	aoi_5_pos_crf_axis_v	FLOAT8	N/A	%f	NUMBER	-1	1	AOI 5 V axis position in the camera reference frame
4067	fpi_aoi_bs_table	aoi_5_pos_crf_axis_w	FLOAT8	N/A	%f	NUMBER	-1	1	AOI 5 W axis position in the camera reference frame
4068	fpi_aoi_bs_table	aoi_5_calc_type	UINT4	N/A	%u	ENUM	0	2	kind of calculation performed on AOI 5(0: OFF), (1: CENTROID), (2: LIMB),
4069	fpi_aoi_bs_table	aoi_5_calc_prio	UINT4	N/A	%u	ENUM	1	4	priority of calculation on AOI 5(1: HIGHEST), (2: HIGH), (3: LOW), (4: LOWEST),
4070	fpi_aoi_bs_table	aoi_5_calc_threshold	FLOAT4	N/A	%f	NUMBER	0	1	current threshold value for centroid or limb calculation
4071	fpi_aoi_bs_table	aoi_5_calc_par_range	FLOAT4	pixels	%f	NUMBER	0	100	current range limit value for centroid calculation
4072	fpi_aoi_bs_table	aoi_5_corr_darkfield	UINT4	N/A	%u	ENUM	0	1	indicates whether darkfield correction is used during centroid/limb and AOI position calculation(0: OFF), (1: ON),
4073	fpi_aoi_bs_table	aoi_5_corr_flatfield	UINT4	N/A	%u	ENUM	0	1	indicates whether flatfield correction is used during centroid/limb and AOI position calculation(0: OFF), (1: ON),
4074	fpi_aoi_bs_table	aoi_5_corr_distortion	UINT4	N/A	%u	ENUM	0	1	indicates whether distortion correction is used during centroid/limb and AOI position calculation(0: OFF), (1: ON),
4075	fpi_aoi_bs_table	aoi_6_aoi_state	INT4	N/A	%d	ENUM	0	1	indicates whether the AOI is defined on the specified image or cleared(0: CLEARED), (1: DEFINED),
4076	fpi_aoi_bs_table	aoi_6_aoi_snr	UINT4	N/A	%u	NUMBER	0	999	serial number of AOI 6
4077	fpi_aoi_bs_table	aoi_6_aoi_size_rows	UINT4	N/A	%u	NUMBER	0	150	size of AOI 6 in pixel row values
4078	fpi_aoi_bs_table	aoi_6_aoi_size_cols	UINT4	N/A	%u	NUMBER	0	150	size of AOI 6 in pixel column values
4079	fpi_aoi_bs_table	aoi_6_pos_pix_status	UINT4	N/A	%u	ENUM	0	1	status of AOI 6 position in pixel coordinates(0: NOT_VALID), (1: VALID),
4080	fpi_aoi_bs_table	aoi_6_pos_pix_row_start	UINT4	N/A	%u	NUMBER	0	1023	row position of AOI 6 in pixel coordinates
4081	fpi_aoi_bs_table	aoi_6_pos_pix_col_start	UINT4	N/A	%u	NUMBER	0	1023	column position of AOI 6 in pixel coordinates

	A	B	C	D	E	F	G	H	I
4082	fpi_aoi_bs_table	aoi_6_pos_pix_size_rows	UINT4	N/A	%u	NUMBER	0	1023	row size of AOI 6 in pixel coordinates
4083	fpi_aoi_bs_table	aoi_6_pos_pix_size_cols	UINT4	N/A	%u	NUMBER	0	1023	column size of AOI 6 in pixel coordinates
4084	fpi_aoi_bs_table	aoi_6_pos_pix_aoi_fov	UINT4	N/A	%u	ENUM	0	2	indicates the position of the AOI relative to the imager FOV(0: ON_FOV), (1: PART_FOV), (2: OFF_FOV),
4085	fpi_aoi_bs_table	aoi_6_pos_crf_status	INT4	N/A	%d	ENUM	0	1	status of AOI 6 position in the camera reference frame(0: NOT_VALID), (1: VALID),
4086	fpi_aoi_bs_table	aoi_6_pos_crf_axis_u	FLOAT8	N/A	%f	NUMBER	-1	1	AOI 6 U axis position in the camera reference frame
4087	fpi_aoi_bs_table	aoi_6_pos_crf_axis_v	FLOAT8	N/A	%f	NUMBER	-1	1	AOI 6 V axis position in the camera reference frame
4088	fpi_aoi_bs_table	aoi_6_pos_crf_axis_w	FLOAT8	N/A	%f	NUMBER	-1	1	AOI 6 W axis position in the camera reference frame
4089	fpi_aoi_bs_table	aoi_6_calc_type	UINT4	N/A	%u	ENUM	0	2	kind of calculation performed on AOI 6(0: OFF), (1: CENTROID), (2: LIMB),
4090	fpi_aoi_bs_table	aoi_6_calc_prio	UINT4	N/A	%u	ENUM	1	4	priority of calculation on AOI 6(1: HIGHEST), (2: HIGH), (3: LOW), (4: LOWEST),
4091	fpi_aoi_bs_table	aoi_6_calc_threshold	FLOAT4	N/A	%f	NUMBER	0	1	current threshold value for centroid or limb calculation
4092	fpi_aoi_bs_table	aoi_6_calc_par_range	FLOAT4	pixels	%f	NUMBER	0	100	current range limit value for centroid calculation
4093	fpi_aoi_bs_table	aoi_6_corr_darkfield	UINT4	N/A	%u	ENUM	0	1	indicates whether darkfield correction is used during centroid/limb and AOI position calculation(0: OFF), (1: ON),
4094	fpi_aoi_bs_table	aoi_6_corr_flatfield	UINT4	N/A	%u	ENUM	0	1	indicates whether flatfield correction is used during centroid/limb and AOI position calculation(0: OFF), (1: ON),
4095	fpi_aoi_bs_table	aoi_6_corr_distortion	UINT4	N/A	%u	ENUM	0	1	indicates whether distortion correction is used during centroid/limb and AOI position calculation(0: OFF), (1: ON),
4096	fpi_aoi_bs_table	aoi_7_aoi_state	INT4	N/A	%d	ENUM	0	1	indicates whether the AOI is defined on the specified image or cleared(0: CLEARED), (1: DEFINED),
4097	fpi_aoi_bs_table	aoi_7_aoi_snr	UINT4	N/A	%u	NUMBER	0	999	serial number of AOI 7
4098	fpi_aoi_bs_table	aoi_7_aoi_size_rows	UINT4	N/A	%u	NUMBER	0	150	size of AOI 7 in pixel row values
4099	fpi_aoi_bs_table	aoi_7_aoi_size_cols	UINT4	N/A	%u	NUMBER	0	150	size of AOI 7 in pixel column values
4100	fpi_aoi_bs_table	aoi_7_pos_pix_status	UINT4	N/A	%u	ENUM	0	1	status of AOI 7 position in pixel coordinates(0: NOT_VALID), (1: VALID),
4101	fpi_aoi_bs_table	aoi_7_pos_pix_row_start	UINT4	N/A	%u	NUMBER	0	1023	row position of AOI 7 in pixel coordinates
4102	fpi_aoi_bs_table	aoi_7_pos_pix_col_start	UINT4	N/A	%u	NUMBER	0	1023	column position of AOI 7 in pixel coordinates
4103	fpi_aoi_bs_table	aoi_7_pos_pix_size_rows	UINT4	N/A	%u	NUMBER	0	1023	row size of AOI 7 in pixel coordinates
4104	fpi_aoi_bs_table	aoi_7_pos_pix_size_cols	UINT4	N/A	%u	NUMBER	0	1023	column size of AOI 7 in pixel coordinates
4105	fpi_aoi_bs_table	aoi_7_pos_pix_aoi_fov	UINT4	N/A	%u	ENUM	0	2	indicates the position of the AOI relative to the imager FOV(0: ON_FOV), (1: PART_FOV), (2: OFF_FOV),
4106	fpi_aoi_bs_table	aoi_7_pos_crf_status	INT4	N/A	%d	ENUM	0	1	status of AOI 7 position in the camera reference frame(0: NOT_VALID), (1: VALID),
4107	fpi_aoi_bs_table	aoi_7_pos_crf_axis_u	FLOAT8	N/A	%f	NUMBER	-1	1	AOI 7 U axis position in the camera reference frame
4108	fpi_aoi_bs_table	aoi_7_pos_crf_axis_v	FLOAT8	N/A	%f	NUMBER	-1	1	AOI 7 V axis position in the camera reference frame
4109	fpi_aoi_bs_table	aoi_7_pos_crf_axis_w	FLOAT8	N/A	%f	NUMBER	-1	1	AOI 7 W axis position in the camera reference frame
4110	fpi_aoi_bs_table	aoi_7_calc_type	UINT4	N/A	%u	ENUM	0	2	kind of calculation performed on AOI 7(0: OFF), (1: CENTROID), (2: LIMB),
4111	fpi_aoi_bs_table	aoi_7_calc_prio	UINT4	N/A	%u	ENUM	1	4	priority of calculation on AOI 7(1: HIGHEST), (2: HIGH), (3: LOW), (4: LOWEST),
4112	fpi_aoi_bs_table	aoi_7_calc_threshold	FLOAT4	N/A	%f	NUMBER	0	1	current threshold value for centroid or limb calculation
4113	fpi_aoi_bs_table	aoi_7_calc_par_range	FLOAT4	pixels	%f	NUMBER	0	100	current range limit value for centroid calculation
4114	fpi_aoi_bs_table	aoi_7_corr_darkfield	UINT4	N/A	%u	ENUM	0	1	indicates whether darkfield correction is used during centroid/limb and AOI position calculation(0: OFF), (1: ON),

	A	B	C	D	E	F	G	H	I
4115	fpi_aoi_bs_table	aoi_7_corr_flatfield	UINT4	N/A	%u	ENUM	0	1	indicates whether flatfield correction is used during centroid/limb and AOI position calculation(0: OFF), (1: ON),
4116	fpi_aoi_bs_table	aoi_7_corr_distortion	UINT4	N/A	%u	ENUM	0	1	indicates whether distortion correction is used during centroid/limb and AOI position calculation(0: OFF), (1: ON),
4117	fpi_aoi_bs_table	aoi_8_aoi_state	INT4	N/A	%d	ENUM	0	1	indicates whether the AOI is defined on the specified image or cleared(0: CLEARED), (1: DEFINED),
4118	fpi_aoi_bs_table	aoi_8_aoi_snr	UINT4	N/A	%u	NUMBER	0	999	serial number of AOI 8
4119	fpi_aoi_bs_table	aoi_8_aoi_size_rows	UINT4	N/A	%u	NUMBER	0	150	size of AOI 8 in pixel row values
4120	fpi_aoi_bs_table	aoi_8_aoi_size_cols	UINT4	N/A	%u	NUMBER	0	150	size of AOI 8 in pixel column values
4121	fpi_aoi_bs_table	aoi_8_pos_pix_status	UINT4	N/A	%u	ENUM	0	1	status of AOI 8 position in pixel coordinates(0: NOT_VALID), (1: VALID),
4122	fpi_aoi_bs_table	aoi_8_pos_pix_row_start	UINT4	N/A	%u	NUMBER	0	1023	row position of AOI 8 in pixel coordinates
4123	fpi_aoi_bs_table	aoi_8_pos_pix_col_start	UINT4	N/A	%u	NUMBER	0	1023	column position of AOI 8 in pixel coordinates
4124	fpi_aoi_bs_table	aoi_8_pos_pix_size_rows	UINT4	N/A	%u	NUMBER	0	1023	row size of AOI 8 in pixel coordinates
4125	fpi_aoi_bs_table	aoi_8_pos_pix_size_cols	UINT4	N/A	%u	NUMBER	0	1023	column size of AOI 8 in pixel coordinates
4126	fpi_aoi_bs_table	aoi_8_pos_pix_aoi_fov	UINT4	N/A	%u	ENUM	0	2	indicates the position of the AOI relative to the imager FOV(0: ON_FOV), (1: PART_FOV), (2: OFF_FOV),
4127	fpi_aoi_bs_table	aoi_8_pos_crf_status	INT4	N/A	%d	ENUM	0	1	status of AOI 8 position in the camera reference frame(0: NOT_VALID), (1: VALID),
4128	fpi_aoi_bs_table	aoi_8_pos_crf_axis_u	FLOAT8	N/A	%f	NUMBER	-1	1	AOI 8 U axis position in the camera reference frame
4129	fpi_aoi_bs_table	aoi_8_pos_crf_axis_v	FLOAT8	N/A	%f	NUMBER	-1	1	AOI 8 V axis position in the camera reference frame
4130	fpi_aoi_bs_table	aoi_8_pos_crf_axis_w	FLOAT8	N/A	%f	NUMBER	-1	1	AOI 8 W axis position in the camera reference frame
4131	fpi_aoi_bs_table	aoi_8_calc_type	UINT4	N/A	%u	ENUM	0	2	kind of calculation performed on AOI 8(0: OFF), (1: CENTROID), (2: LIMB),
4132	fpi_aoi_bs_table	aoi_8_calc_prio	UINT4	N/A	%u	ENUM	1	4	priority of calculation on AOI 8(1: HIGHEST), (2: HIGH), (3: LOW), (4: LOWEST),
4133	fpi_aoi_bs_table	aoi_8_calc_threshold	FLOAT4	N/A	%f	NUMBER	0	1	current threshold value for centroid or limb calculation
4134	fpi_aoi_bs_table	aoi_8_calc_par_range	FLOAT4	pixels	%f	NUMBER	0	100	current range limit value for centroid calculation
4135	fpi_aoi_bs_table	aoi_8_corr_darkfield	UINT4	N/A	%u	ENUM	0	1	indicates whether darkfield correction is used during centroid/limb and AOI position calculation(0: OFF), (1: ON),
4136	fpi_aoi_bs_table	aoi_8_corr_flatfield	UINT4	N/A	%u	ENUM	0	1	indicates whether flatfield correction is used during centroid/limb and AOI position calculation(0: OFF), (1: ON),
4137	fpi_aoi_bs_table	aoi_8_corr_distortion	UINT4	N/A	%u	ENUM	0	1	indicates whether distortion correction is used during centroid/limb and AOI position calculation(0: OFF), (1: ON),
4138	trc_config								data returned in response to the trc_config_get command
4139	trc_config	packet	BINARY	N/A	%s	NUMBER			data packet as it was received from the TA
4140	trc_config	pkt_timestamp	TIME8	seconds	%d.%09d	NUMBER	0	2147483647	time data packet was constructed by TA
4141	trc_config	size_pixel	FLOAT4	millimeters	%lf	NUMBER	N/A	N/A	size of CCD pixels
4142	trc_config	limb_threshold	FLOAT4	N/A	%lf	NUMBER	N/A	N/A	scale factor for limb threshold value calculation
4143	trc_config	limb_filter_0_0	FLOAT4	N/A	%lf	NUMBER	N/A	N/A	edge filter matrix
4144	trc_config	limb_filter_0_1	FLOAT4	N/A	%lf	NUMBER	N/A	N/A	edge filter matrix
4145	trc_config	limb_filter_0_2	FLOAT4	N/A	%lf	NUMBER	N/A	N/A	edge filter matrix
4146	trc_config	limb_filter_1_0	FLOAT4	N/A	%lf	NUMBER	N/A	N/A	edge filter matrix
4147	trc_config	limb_filter_1_1	FLOAT4	N/A	%lf	NUMBER	N/A	N/A	edge filter matrix
4148	trc_config	limb_filter_1_2	FLOAT4	N/A	%lf	NUMBER	N/A	N/A	edge filter matrix

	A	B	C	D	E	F	G	H	I
4149	trc_config	limb_filter_2_0	FLOAT4	N/A	%lf	NUMBER	N/A	N/A	edge filter matrix
4150	trc_config	limb_filter_2_1	FLOAT4	N/A	%lf	NUMBER	N/A	N/A	edge filter matrix
4151	trc_config	limb_filter_2_2	FLOAT4	N/A	%lf	NUMBER	N/A	N/A	edge filter matrix
4152	trc_config	limb_factor_q	FLOAT4	N/A	%lf	NUMBER	N/A	N/A	scale factor for limb quality index calculation
4153	trc_config	cent_window_0_0	FLOAT4	N/A	%lf	NUMBER	N/A	N/A	calculation window matrix for the estimation of the pixel distribution height
4154	trc_config	cent_window_0_1	FLOAT4	N/A	%lf	NUMBER	N/A	N/A	calculation window matrix for the estimation of the pixel distribution height
4155	trc_config	cent_window_0_2	FLOAT4	N/A	%lf	NUMBER	N/A	N/A	calculation window matrix for the estimation of the pixel distribution height
4156	trc_config	cent_window_0_3	FLOAT4	N/A	%lf	NUMBER	N/A	N/A	calculation window matrix for the estimation of the pixel distribution height
4157	trc_config	cent_window_0_4	FLOAT4	N/A	%lf	NUMBER	N/A	N/A	calculation window matrix for the estimation of the pixel distribution height
4158	trc_config	cent_window_1_0	FLOAT4	N/A	%lf	NUMBER	N/A	N/A	calculation window matrix for the estimation of the pixel distribution height
4159	trc_config	cent_window_1_1	FLOAT4	N/A	%lf	NUMBER	N/A	N/A	calculation window matrix for the estimation of the pixel distribution height
4160	trc_config	cent_window_1_2	FLOAT4	N/A	%lf	NUMBER	N/A	N/A	calculation window matrix for the estimation of the pixel distribution height
4161	trc_config	cent_window_1_3	FLOAT4	N/A	%lf	NUMBER	N/A	N/A	calculation window matrix for the estimation of the pixel distribution height
4162	trc_config	cent_window_1_4	FLOAT4	N/A	%lf	NUMBER	N/A	N/A	calculation window matrix for the estimation of the pixel distribution height
4163	trc_config	cent_window_2_0	FLOAT4	N/A	%lf	NUMBER	N/A	N/A	calculation window matrix for the estimation of the pixel distribution height
4164	trc_config	cent_window_2_1	FLOAT4	N/A	%lf	NUMBER	N/A	N/A	calculation window matrix for the estimation of the pixel distribution height
4165	trc_config	cent_window_2_2	FLOAT4	N/A	%lf	NUMBER	N/A	N/A	calculation window matrix for the estimation of the pixel distribution height
4166	trc_config	cent_window_2_3	FLOAT4	N/A	%lf	NUMBER	N/A	N/A	calculation window matrix for the estimation of the pixel distribution height
4167	trc_config	cent_window_2_4	FLOAT4	N/A	%lf	NUMBER	N/A	N/A	calculation window matrix for the estimation of the pixel distribution height
4168	trc_config	cent_window_3_0	FLOAT4	N/A	%lf	NUMBER	N/A	N/A	calculation window matrix for the estimation of the pixel distribution height
4169	trc_config	cent_window_3_1	FLOAT4	N/A	%lf	NUMBER	N/A	N/A	calculation window matrix for the estimation of the pixel distribution height
4170	trc_config	cent_window_3_2	FLOAT4	N/A	%lf	NUMBER	N/A	N/A	calculation window matrix for the estimation of the pixel distribution height
4171	trc_config	cent_window_3_3	FLOAT4	N/A	%lf	NUMBER	N/A	N/A	calculation window matrix for the estimation of the pixel distribution height
4172	trc_config	cent_window_3_4	FLOAT4	N/A	%lf	NUMBER	N/A	N/A	calculation window matrix for the estimation of the pixel distribution height
4173	trc_config	cent_window_4_0	FLOAT4	N/A	%lf	NUMBER	N/A	N/A	calculation window matrix for the estimation of the pixel distribution height
4174	trc_config	cent_window_4_1	FLOAT4	N/A	%lf	NUMBER	N/A	N/A	calculation window matrix for the estimation of the pixel distribution height
4175	trc_config	cent_window_4_2	FLOAT4	N/A	%lf	NUMBER	N/A	N/A	calculation window matrix for the estimation of the pixel distribution height

	A	B	C	D	E	F	G	H	I
4176	trc_config	cent_window_4_3	FLOAT4	N/A	%lf	NUMBER	N/A	N/A	calculation window matrix for the estimation of the pixel distribution height
4177	trc_config	cent_window_4_4	FLOAT4	N/A	%lf	NUMBER	N/A	N/A	calculation window matrix for the estimation of the pixel distribution height
4178	trc_config	cent_width_limit	FLOAT4	N/A	%lf	NUMBER	N/A	N/A	limit of centroid width
4179	trc_config	cent_factor_q	FLOAT4	N/A	%lf	NUMBER	N/A	N/A	scale factor for the centroid quality
4180	trc_config	dark_fmt_wfi	FLOAT4	N/A	%lf	NUMBER	N/A	N/A	scale factor for the darkfield calculation for the WFI imager
4181	trc_config	dark_fmt_ffi	FLOAT4	N/A	%lf	NUMBER	N/A	N/A	scale factor for the darkfield calculation for the FFI imager
4182	trc_config	dark_fmt_fpi	FLOAT4	N/A	%lf	NUMBER	N/A	N/A	scale factor for the darkfield calculation for the FPI imager
4183	trc_config	distortion_wfi_par_a	FLOAT8	N/A	%lf	NUMBER	N/A	N/A	distortion parameter for the WFI imager
4184	trc_config	distortion_wfi_par_b	FLOAT8	N/A	%lf	NUMBER	N/A	N/A	distortion parameter for the WFI imager
4185	trc_config	distortion_wfi_par_c	FLOAT8	N/A	%lf	NUMBER	N/A	N/A	distortion parameter for the WFI imager
4186	trc_config	distortion_wfi_par_d	FLOAT8	N/A	%lf	NUMBER	N/A	N/A	distortion parameter for the WFI imager
4187	trc_config	distortion_wfi_par_e	FLOAT8	N/A	%lf	NUMBER	N/A	N/A	distortion parameter for the WFI imager
4188	trc_config	distortion_ffi_par_a	FLOAT8	N/A	%lf	NUMBER	N/A	N/A	distortion parameter for the FFI imager
4189	trc_config	distortion_ffi_par_b	FLOAT8	N/A	%lf	NUMBER	N/A	N/A	distortion parameter for the FFI imager
4190	trc_config	distortion_ffi_par_c	FLOAT8	N/A	%lf	NUMBER	N/A	N/A	distortion parameter for the FFI imager
4191	trc_config	distortion_ffi_par_d	FLOAT8	N/A	%lf	NUMBER	N/A	N/A	distortion parameter for the FFI imager
4192	trc_config	distortion_ffi_par_e	FLOAT8	N/A	%lf	NUMBER	N/A	N/A	distortion parameter for the FFI imager
4193	trc_config	distortion_fpi_par_a	FLOAT8	N/A	%lf	NUMBER	N/A	N/A	distortion parameter for the FPI imager
4194	trc_config	distortion_fpi_par_b	FLOAT8	N/A	%lf	NUMBER	N/A	N/A	distortion parameter for the FPI imager
4195	trc_config	distortion_fpi_par_c	FLOAT8	N/A	%lf	NUMBER	N/A	N/A	distortion parameter for the FPI imager
4196	trc_config	distortion_fpi_par_d	FLOAT8	N/A	%lf	NUMBER	N/A	N/A	distortion parameter for the FPI imager
4197	trc_config	distortion_fpi_par_e	FLOAT8	N/A	%lf	NUMBER	N/A	N/A	distortion parameter for the FPI imager
4198	trc_config	iteration_limit_wfi	FLOAT4	N/A	%lf	NUMBER	N/A	N/A	iteration limit for distortion compensation for the WFI imager
4199	trc_config	iteration_limit_ffi	FLOAT4	N/A	%lf	NUMBER	N/A	N/A	iteration limit for distortion compensation for the FFI imager
4200	trc_config	iteration_limit_fpi	FLOAT4	N/A	%lf	NUMBER	N/A	N/A	iteration limit for distortion compensation for the FPI imager
4201	trc_config	focal_parameters_focal_length_m1	FLOAT4	millimeters	%lf	NUMBER	N/A	N/A	focal length of mirror M1
4202	trc_config	focal_parameters_focal_length_m2	FLOAT4	millimeters	%lf	NUMBER	N/A	N/A	focal length of mirror M2
4203	trc_config	focal_parameters_dist_mirror_nom	FLOAT4	millimeters	%lf	NUMBER	N/A	N/A	nominal distance of secondary mirror
4204	trc_config	focal_parameters_focal_length_oc	FLOAT4	millimeters	%lf	NUMBER	N/A	N/A	focal length of FPI ocular
4205	trc_config	focal_parameters_focal_length_pl	FLOAT4	millimeters	%lf	NUMBER	N/A	N/A	focal length of FPI planar
4206	trc_config	focal_parameters_focus_pos_nom	FLOAT4	millimeters	%lf	NUMBER	N/A	N/A	nominal FPI position
4207	trc_config	focus_encode_scale	INT4	N/A	%d	NUMBER	N/A	N/A	number of focus encoder counts per rotation
4208	trc_config	focus_spindle_lead	FLOAT4	N/A	%lf	NUMBER	N/A	N/A	focus movement on one spindle turn in mm
4209	trc_config	focus_lower_limit	FLOAT4	millimeters	%lf	NUMBER	N/A	N/A	the lower limit of the focus spindle (absolute)
4210	trc_config	focus_upper_limit	FLOAT4	millimeters	%lf	NUMBER	N/A	N/A	the upper limit of the focus spindle (absolute)

	A	B	C	D	E	F	G	H	I
4211	trc_config	gravity_ref	FLOAT4	meters per square second	%lf	NUMBER	N/A	N/A	reference gravity for the alignment of FPI internal bending
4212	trc_config	ref_temp_t2	FLOAT4	kelvins	%lf	NUMBER	N/A	N/A	reference temperature for the temperature sensor T2
4213	trc_config	ref_temp_t3	FLOAT4	kelvins	%lf	NUMBER	N/A	N/A	reference temperature for the temperature sensor T3
4214	trc_config	ref_temp_t6	FLOAT4	kelvins	%lf	NUMBER	N/A	N/A	reference temperature for the temperature sensor T6
4215	trc_config	temp_coeff_0	FLOAT4	N/A	%lf	NUMBER	N/A	N/A	temperature coefficient a
4216	trc_config	temp_coeff_1	FLOAT4	N/A	%lf	NUMBER	N/A	N/A	temperature coefficient b
4217	trc_config	temp_coeff_2	FLOAT4	N/A	%lf	NUMBER	N/A	N/A	temperature coefficient c
4218	trc_config	pointing_coeff_0	FLOAT4	N/A	%lf	NUMBER	N/A	N/A	pointing coefficient k1
4219	trc_config	pointing_coeff_1	FLOAT4	N/A	%lf	NUMBER	N/A	N/A	pointing coefficient k2
4220	trc_config	pointing_coeff_2	FLOAT4	N/A	%lf	NUMBER	N/A	N/A	pointing coefficient k3
4221	trc_config	align_wfi_mf_quat	UQUAT32	N/A	%lf	NUMBER	-1	1	alignment of WFI w.r.t. WFIMF
4222	trc_config	align_ffi_mf_quat	UQUAT32	N/A	%lf	NUMBER	-1	1	alignment of FFI w.r.t. FFIMF
4223	trc_config	align_fpi_mf_quat	UQUAT32	N/A	%lf	NUMBER	-1	1	alignment of FPI w.r.t. FPIMF
4224	trc_config	focal_length_wfi	FLOAT4	millimeters	%lf	NUMBER	N/A	N/A	focal length of the WFI camera
4225	trc_config	focal_length_ffi	FLOAT4	millimeters	%lf	NUMBER	N/A	N/A	focal length of the FFI camera
4226	trc_config	iqc_inversion	INT4	N/A	%d	NUMBER	N/A	N/A	flag if IQC quaternion should be inverted or not
4227	trc_config	img_index_wfi	FLOAT4	N/A	%lf	NUMBER	N/A	N/A	specific imager index derived from pointing stability requirements for the WFI imager
4228	trc_config	img_index_ffi	FLOAT4	N/A	%lf	NUMBER	N/A	N/A	specific imager index derived from pointing stability requirements for the FFI imager
4229	trc_config	img_index_fpi	FLOAT4	N/A	%lf	NUMBER	N/A	N/A	specific imager index derived from pointing stability requirements for the FPI imager
4230	trc_config	cent_qlt_limit	FLOAT8	N/A	%lf	NUMBER	N/A	N/A	limit of centroid quality index (0.0, ..., 1.0)
4231	trc_config	limb_qlt_limit	FLOAT8	N/A	%lf	NUMBER	N/A	N/A	limit of limb quality index (0.0, ..., 1.0)
4232	trc_config	cent_afq_limit	FLOAT8	N/A	%lf	NUMBER	N/A	N/A	limit of centroid quality index (0.0, ..., 1.0) at the start of the auto-focus operation
4233	trc_config	af_start_step	FLOAT4	N/A	%lf	NUMBER	N/A	N/A	the length of the first step for the auto-focus loop
4234	trc_config	af_centr_avg_limit	UINT4	N/A	%u	NUMBER	N/A	N/A	the number of centroid iterations for the autofocus
4235	trc_config	delta_exp_start	UINT4	N/A	%u	NUMBER	N/A	N/A	tolerance area for the exposure start time
4236	trc_config	delta_can_time	UINT4	N/A	%u	NUMBER	N/A	N/A	tolerance area for CANbus command timestamps (pixel_xx, filter, focus, reticle)
4237	trc_config	can_version	INT4	N/A	%d	NUMBER	N/A	N/A	CANbus ICC version
4238	trc_config	max_tsc_data_gap	UINT4	milliseconds	%u	NUMBER	N/A	N/A	the maximum time between the exposure start/end and the previous/past entry in the attitude table and the maximal gap between two entries in the attitude table
4239	trc_config	transform_mode_wfi	INT4	N/A	%d	NUMBER	N/A	N/A	the image transformation mode for the WFI camera
4240	trc_config	transform_mode_ffi	INT4	N/A	%d	NUMBER	N/A	N/A	the image transformation mode for the FFI camera
4241	trc_config	transform_mode_fpi	INT4	N/A	%d	NUMBER	N/A	N/A	the image transformation mode for the FPI camera
4242	trc_config	parallel_limit_14g1	FLOAT4	milliseconds	%lf	NUMBER	N/A	N/A	the time limit for the switch of sequential/parallel timing for PF 14 PG 1x1
4243	trc_config	parallel_limit_14g2	FLOAT4	milliseconds	%lf	NUMBER	N/A	N/A	the time limit for the switch of sequential/parallel timing for PF 14 PG 2x2

	A	B	C	D	E	F	G	H	I
4244	trc_config	parallel_limit_14g4	FLOAT4	milliseconds	%lf	NUMBER	N/A	N/A	the time limit for the switch of sequential/parallel timing for PF 14 PG 4x4
4245	trc_config	parallel_limit_08g1	FLOAT4	milliseconds	%lf	NUMBER	N/A	N/A	the time limit for the switch of sequential/parallel timing for PF 8 PG 1x1
4246	trc_config	parallel_limit_08g2	FLOAT4	milliseconds	%lf	NUMBER	N/A	N/A	the time limit for the switch of sequential/parallel timing for PF 8 PG 2x2
4247	trc_config	parallel_limit_08g4	FLOAT4	milliseconds	%lf	NUMBER	N/A	N/A	the time limit for the switch of sequential/parallel timing for PF 8 PG 4x4
4248	trc_config	parallel_off_14g1	FLOAT4	milliseconds	%lf	NUMBER	N/A	N/A	the time offset subtraction from the exposure time to set in parallel mode for PF 14 PG 1x1
4249	trc_config	parallel_off_14g2	FLOAT4	milliseconds	%lf	NUMBER	N/A	N/A	the time offset subtraction from the exposure time to set in parallel mode for PF 14 PG 2x2
4250	trc_config	parallel_off_14g4	FLOAT4	milliseconds	%lf	NUMBER	N/A	N/A	the time offset subtraction from the exposure time to set in parallel mode for PF 14 PG 4x4
4251	trc_config	parallel_off_08g1	FLOAT4	milliseconds	%lf	NUMBER	N/A	N/A	the time offset subtraction from the exposure time to set in parallel mode for PF 8 PG 1x1
4252	trc_config	parallel_off_08g2	FLOAT4	milliseconds	%lf	NUMBER	N/A	N/A	the time offset subtraction from the exposure time to set in parallel mode for PF 8 PG 2x2
4253	trc_config	parallel_off_08g4	FLOAT4	milliseconds	%lf	NUMBER	N/A	N/A	the time offset subtraction from the exposure time to set in parallel mode for PF 8 PG 4x4
4254	trc_config	transfer_time_14g1	INT4	milliseconds	%d	NUMBER	N/A	N/A	the image transfer and readout time for 1x1 binning and PF 14
4255	trc_config	transfer_time_14g2	INT4	milliseconds	%d	NUMBER	N/A	N/A	the image transfer and readout time for 2x2 binning and PF 14
4256	trc_config	transfer_time_14g4	INT4	milliseconds	%d	NUMBER	N/A	N/A	the image transfer and readout time for 4x4 binning and PF 14
4257	trc_config	transfer_time_08g1	INT4	milliseconds	%d	NUMBER	N/A	N/A	the image transfer and readout time for 1x1 binning and PF 8
4258	trc_config	transfer_time_08g2	INT4	milliseconds	%d	NUMBER	N/A	N/A	the image transfer and readout time for 2x2 binning and PF 8
4259	trc_config	transfer_time_08g4	INT4	milliseconds	%d	NUMBER	N/A	N/A	the image transfer and readout time for 4x4 binning and PF 8
4260	trc_config	transfer_time_delta	INT4	milliseconds	%d	NUMBER	N/A	N/A	the image transfer and readout time delta for all timings
4261	trc_config	filter_pos_df_aqu	INT4	N/A	%d	NUMBER	N/A	N/A	the filter position when acquiring a darkfield image (used for flatfield acquisition)
4262	trc_config	flatfield_div_wfi	INT4	N/A	%d	NUMBER	N/A	N/A	the division value for the flatfield correction for the WFI camera processor
4263	trc_config	flatfield_div_ffi	INT4	N/A	%d	NUMBER	N/A	N/A	the division value for the flatfield correction for the FFI camera processor
4264	trc_config	flatfield_div_fpi	INT4	N/A	%d	NUMBER	N/A	N/A	the division value for the flatfield correction for the FPI camera processor
4265	trc_config	darkfield_offset_wfi	FLOAT4	N/A	%lf	NUMBER	N/A	N/A	darkfield calculation offset value for WFI camera
4266	trc_config	darkfield_offset_ffi	FLOAT4	N/A	%lf	NUMBER	N/A	N/A	darkfield calculation offset value for FFI camera
4267	trc_config	darkfield_offset_fpi	FLOAT4	N/A	%lf	NUMBER	N/A	N/A	darkfield calculation offset value for FPI camera
4268	trc_config	timeout_tap_evt	INT4	milliseconds	%d	NUMBER	N/A	N/A	reaction time of Tap_calc on events, (mode transition or LOSlimit/Tweak exception)
4269	trc_config	timeout_rof_evt	INT4	milliseconds	%d	NUMBER	N/A	N/A	reaction time of Rof_calc on events, (transition to positioning mode)

	A	B	C	D	E	F	G	H	I
4270	trc_config	timeout_ccp_ans	INT4	milliseconds	%d	NUMBER	N/A	N/A	timeout for CP_ANSWER from camera processor
4271	trc_config	timeout_tsc_res	INT4	milliseconds	%d	NUMBER	N/A	N/A	timeout for TASCU response
4272	trc_config	timeout_vid_ctl	INT4	seconds	%d	NUMBER	N/A	N/A	timeout for Video Handler Control (Darkfield Acquisition)
4273	trc_config	timeout_seq_hnd	INT4	seconds	%d	NUMBER	N/A	N/A	timeout for Sequence Handler (AOI BS request)
4274	trc_config	timeout_can_ans	INT4	seconds	%d	NUMBER	N/A	N/A	timeout for CANbus answers
4275	trc_config	timeout_filter_ans	INT4	seconds	%d	NUMBER	N/A	N/A	timeout for filter wheel CANbus answers
4276	**ta_tsc** **TA Servo Control Unit (TASCU) data**								
4277	**HK NAME**	**Name**	**Rep**	**Units**	**Format**	**Form**	**lo_lim**	**hi_lim**	**Description**
4278	rcs_id		STRING	N/A	%s	NUMBER			Version information for the XML file that defines this data source
4279	archive_info								Archive Info
4280	archive_info	archive_status	BOOL4	N/A	%s	ENUM	0	1	(0: false), (1: true),
4281	archive_info	current_bytes_archived	FLOAT8	N/A	%1f	NUMBER	0		Total bytes written to the current ark file
4282	archive_info	total_bytes_archived	FLOAT8	N/A	%1f	NUMBER	0		Total bytes written since this data source starts
4283	archive_info	archive_file_name	STRING	N/A	%s	NUMBER			Archive file name
4284	archive_nsamples								Archive nth sample for data groups, the part before the _nsample must match the data group node name
4285	archive_nsamples	current_bytes_archived_nsample	INT4	N/A	%d	NUMBER	0		
4286	archive_nsamples	total_bytes_archived_nsample	INT4	N/A	%d	NUMBER	0		
4287	archive_nsamples	tsc_mcs_hk_nsample	INT4	N/A	%d	NUMBER	0		
4288	commands		STRING	N/A	%s	NUMBER			Contains the last SCL command sent to the TASCU
4289	responses								Contains SCL responses for TASCU commands
4290	responses	tsc_mode_shutdown	STRING	N/A	%s	NUMBER			Last SCL response sent back to the issuer of the tsc_mode_shutdown command
4291	responses	tsc_mode_caged	STRING	N/A	%s	NUMBER			Last SCL response sent back to the issuer of the tsc_mode_caged command
4292	responses	tsc_mode_standby	STRING	N/A	%s	NUMBER			Last SCL response sent back to the issuer of the tsc_mode_standby command
4293	responses	tsc_mode_stab_local	STRING	N/A	%s	NUMBER			Last SCL response sent back to the issuer of the tsc_mode_stab_local command
4294	responses	tsc_mode_stab_inertial	STRING	N/A	%s	NUMBER			Last SCL response sent back to the issuer of the tsc_mode_stab_inertial command
4295	responses	tsc_mode_sw_interlock	STRING	N/A	%s	NUMBER			Last SCL response sent back to the issuer of the tsc_mode_sw_interlock command
4296	responses	tsc_auto_bal_control	STRING	N/A	%s	NUMBER			Last SCL response sent back to the issuer of the tsc_auto_bal_control command
4297	responses	tsc_vis_adjust	STRING	N/A	%s	NUMBER			Last SCL response sent back to the issuer of the tsc_vis_adjust command
4298	responses	tsc_vis_auto_control	STRING	N/A	%s	NUMBER			Last SCL response sent back to the issuer of the tsc_vis_auto_control command
4299	responses	tsc_bd_param_set	STRING	N/A	%s	NUMBER			Last SCL response sent back to the issuer of the tsc_bd_param_set command
4300	responses	tsc_bd_slew	STRING	N/A	%s	NUMBER			Last SCL response sent back to the issuer of the tsc_bd_slew command

	A	B	C	D	E	F	G	H	I
4301	responses	tsc_bd_pos_abs	STRING	N/A	%s	NUMBER			Last SCL response sent back to the issuer of the tsc_bd_pos_abs command
4302	responses	tsc_bd_pos_rel	STRING	N/A	%s	NUMBER			Last SCL response sent back to the issuer of the tsc_bd_pos_rel command
4303	responses	tsc_bd_stop	STRING	N/A	%s	NUMBER			Last SCL response sent back to the issuer of the tsc_bd_stop command
4304	responses	tsc_cd_param_set	STRING	N/A	%s	NUMBER			Last SCL response sent back to the issuer of the tsc_cd_param_set command
4305	responses	tsc_cd_slew	STRING	N/A	%s	NUMBER			Last SCL response sent back to the issuer of the tsc_cd_slew command
4306	responses	tsc_cd_pos_abs	STRING	N/A	%s	NUMBER			Last SCL response sent back to the issuer of the tsc_cd_pos_abs command
4307	responses	tsc_cd_pos_rel	STRING	N/A	%s	NUMBER			Last SCL response sent back to the issuer of the tsc_cd_pos_rel command
4308	responses	tsc_cd_couple	STRING	N/A	%s	NUMBER			Last SCL response sent back to the issuer of the tsc_cd_couple command
4309	responses	tsc_cd_stop	STRING	N/A	%s	NUMBER			Last SCL response sent back to the issuer of the tsc_cd_stop command
4310	responses	tsc_fd_param_set	STRING	N/A	%s	NUMBER			Last SCL response sent back to the issuer of the tsc_fd_param_set command
4311	responses	tsc_fd_slew	STRING	N/A	%s	NUMBER			Last SCL response sent back to the issuer of the tsc_fd_slew command
4312	responses	tsc_fd_pos_abs	STRING	N/A	%s	NUMBER			Last SCL response sent back to the issuer of the tsc_fd_pos_abs command
4313	responses	tsc_fd_pos_rel	STRING	N/A	%s	NUMBER			Last SCL response sent back to the issuer of the tsc_fd_pos_rel command
4314	responses	tsc_fd_prog_track	STRING	N/A	%s	NUMBER			Last SCL response sent back to the issuer of the tsc_fd_prog_track command
4315	responses	tsc_fd_prog_track_control	STRING	N/A	%s	NUMBER			Last SCL response sent back to the issuer of the tsc_fd_prog_track_control command
4316	responses	tsc_fd_prog_offset	STRING	N/A	%s	NUMBER			Last SCL response sent back to the issuer of the tsc_fd_prog_offset command
4317	responses	tsc_fd_prog_offset_control	STRING	N/A	%s	NUMBER			Last SCL response sent back to the issuer of the tsc_fd_prog_offset_control command
4318	responses	tsc_fd_prog_bias	STRING	N/A	%s	NUMBER			Last SCL response sent back to the issuer of the tsc_fd_prog_bias command
4319	responses	tsc_fd_trc_offset	STRING	N/A	%s	NUMBER			Last SCL response sent back to the issuer of the tsc_fd_trc_offset command
4320	responses	tsc_fd_stop	STRING	N/A	%s	NUMBER			Last SCL response sent back to the issuer of the tsc_fd_stop command
4321	responses	tsc_atc_pos_corr	STRING	N/A	%s	NUMBER			Last SCL response sent back to the issuer of the tsc_atc_pos_corr command
4322	responses	tsc_atc_traj_est	STRING	N/A	%s	NUMBER			Last SCL response sent back to the issuer of the tsc_atc_traj_est command
4323	responses	send_packet	STRING	N/A	%s	NUMBER			Last SCL response sent back to the issuer of the send_packet command
4324	ta_tsc_alert								Alerts produced by the TA Servo Control Unit
4325	ta_tsc_alert	ta_tsc_alert_info	STRING	N/A	%s	NUMBER			Information alert
4326	ta_tsc_alert	ta_tsc_alert_warning	STRING	N/A	%s	NUMBER			Warning alert
4327	ta_tsc_alert	ta_tsc_alert_error	STRING	N/A	%s	NUMBER			Error alert

	A	B	C	D	E	F	G	H	I
4328	ta_tsc_alert	ta_tsc_alert_fatal	STRING	N/A	%s	NUMBER			Fatal alert
4329	ta_tsc_alarm								Alarms produced by the TA Servo Control Unit
4330	ta_tsc_alarm	ta_tsc_alarm_info	STRING	N/A	%s	NUMBER			Information alarm
4331	ta_tsc_alarm	ta_tsc_alarm_warning	STRING	N/A	%s	NUMBER			Warning alarm
4332	ta_tsc_alarm	ta_tsc_alarm_error	STRING	N/A	%s	NUMBER			Error alarm
4333	ta_tsc_alarm	ta_tsc_alarm_fatal	STRING	N/A	%s	NUMBER			Fatal alarm
4334	tsc_cmd_ack								generic acknowledgement to a TASCU command
4335	tsc_cmd_ack	packet	BINARY	N/A	%s	NUMBER			data packet as it was received from the TA
4336	tsc_cmd_ack	pkt_timestamp	TIME8	seconds	%d.%09d	NUMBER	0	2147483647	time data packet was constructed by TA
4337	tsc_cmd_ack	tsc_cmd_ack_msg	UINT2	N/A	%u	ENUM	4010	4012	Command acknowledge message from the TSC(4010: COMMAND_RECEIVED), (4011: COMMAND_ACCEPTED), (4012: SEQ_COUNT_CHG),
4338	tsc_cmd_answer								generic answer to a TASCU command
4339	tsc_cmd_answer	packet	BINARY	N/A	%s	NUMBER			data packet as it was received from the TA
4340	tsc_cmd_answer	pkt_timestamp	TIME8	seconds	%d.%09d	NUMBER	0	2147483647	time data packet was constructed by TA
4341	tsc_cmd_answer	tsc_cmd_answer_msg	UINT2	N/A	%u	ENUM	4020	4028	Command answer message from the TSC(4020: COMMAND_EXECUTED), (4021: COMMAND_ABORTED_MODE_CONFLICT), (4022: COMMAND_ABORTED_UNDEFINED_COMMAND), (4023: COMMAND_ABORTED_WRONG_NUMBER_OF_PARAMETERS), (4024: COMMAND_ABORTED_PARAMETER_OUT_OF_RANGE), (4025: COMMAND_ABORTED_NEW_CMD), (4026: COMMAND_ABORTED_EXECUTION_ERROR), (4027: COMMAND_ABORTED_INVALID_VERSION), (4028: COMMAND_ABORTED_HEADER_ERROR),
4342	tsc_alarm								detection of a TSC asynchronous error condition
4343	tsc_alarm	packet	BINARY	N/A	%s	NUMBER			data packet as it was received from the TA
4344	tsc_alarm	pkt_timestamp	TIME8	seconds	%d.%09d	NUMBER	0	2147483647	time data packet was constructed by TA
4345	tsc_alarm	tsc_cmd_alarm_msg	UINT2	N/A	%u	ENUM	4050	4050	Indicates type of error detected by the TSC(4050: SYNC_WORD_ERROR),
4346	tsc_mcs_hk								TASCU housekeeping data
4347	tsc_mcs_hk	packet	BINARY	N/A	%s	NUMBER			data packet as it was received from the TA
4348	tsc_mcs_hk	pkt_timestamp	TIME8	seconds	%d.%09d	NUMBER	0	2147483647	time data packet was constructed by TA
4349	tsc_mcs_hk	tsc_annunciation	UINT2	N/A	%u	BIT	0	65535	Annunciation parameters of TSC(0: DRIVE_MOTION_LIMIT_EXCEEDED), (1: RIA_VIS_PRESSURE_ERROR), (2: DRIVE_ERROR_LIMIT_EXCEEDED), (3: COMPRESSOR_MOTOR_PUMP_OVERLOAD), (4: HYDRAULIC_FLUID_OVER_TEMP), (5: RIA_FAULT), (6: VIS_RANGE_EXCEEDED), (7: LOCKING/CAGING_FAULT), (8: FINE_BAL_LIMIT_REACHED), (9: COMPUTER_COMM_ERROR), (10: PERIPHERALS_COMM_ERROR), (11: TSC_INTERLOCK_STATE),

	A	B	C	D	E	F	G	H	I
4350	tsc_mcs_hk	tsc_status	UINT4	N/A	%u	ENUM	1	268435456	Operation mode of the servo system(1: SHUTDOWN_ENTER_POWER_ON), (2: SHUTDOWN_ENTER_CAGED), (4: SHUTDOWN_ONGOING), (8: SHUTDOWN_EXIT_CAGED), (16: SHUTDOWN_EXIT_POWER_OFF), (32: CAGED_ENTER_SHUTDOWN), (64: CAGED_ENTER_STANDBY), (128: CAGED_ONGOING), (256: CAGED_EXIT_SHUTDOWN), (512: CAGED_EXIT_STANDBY), (1024: STANDBY_ENTER_CAGED), (2048: STANDBY_ENTER_STAB_LOCAL), (4096: STANDBY_ONGOING), (8192: STANDBY_EXIT_CAGED), (16384: STANDBY_EXIT_STAB_LOCAL), (16400: STANDBY_ENTER_ACTIVE), (16416: ACTIVE_ENTER_STANDBY), (16432: ACTIVE_ONGOING), (32768: STAB_LOCAL_ENTER_STANDBY), (65536: STAB_LOCAL_ENTER_STAB_INERTIAL), (131072: STAB_LOCAL_ENTER_AUTO_BAL), (262144: STAB_LOCAL_ONGOING), (524288: STAB_LOCAL_EXIT_STANDBY), (1048576: STAB_LOCAL_EXIT_STAB_INERTIAL), (2097152: STAB_LOCAL_EXIT_AUTO_BAL), (4194304: STAB_LOCAL_AUTO_BAL_ENTER), (8388608: STAB_LOCAL_AUTO_BAL_ONGOING), (16777216: STAB_LOCAL_AUTO_BAL_EXIT), (33554432: STAB_INERTIAL_ENTER), (67108864: STAB_INERTIAL_ONGOING), (134217728: STAB_INERTIAL_EXIT), (268435456: SERVICE),
4351	tsc_mcs_hk	tsc_auto_bal_status	UINT1	N/A	%u	ENUM	0	5	Status of automated balancing(0: INITIAL), (1: ONGOING), (2: SUCCESS), (3: FAILED), (4: ABORTED), (5: ERROR),
4352	tsc_mcs_hk	tsc_interlock	UINT2	N/A	%u	BIT	0	1	Sensed interlock condition(0: PUA_1), (1: TA_STOP_1), (2: TA_STOP_2), (3: HHP_TA_STOP), (4: LCP_TA_STOP), (5: RDACU_INTERLOCK), (6: TASCU_INTERLOCK), (7: SW_INTERLOCK),
4353	tsc_mcs_hk	tsc_errors	UINT4	N/A	%u	BIT	0	4294967295	Detected TSC error condition(0: RIA_COMM_ERROR), (1: OSTC_COMM_ERROR), (2: FDTC_COMM_ERROR), (3: HW_COMM_ERROR), (4: FD_COMM_ERROR), (5: BD_COMM_ERROR), (6: CD_COMM_ERROR), (7: VIS_COMM_ERROR), (8: PUA_1_ERROR), (9: PUA_2_ERROR), (10: PUB_ERROR), (11: VIS_FATAL_ERROR), (31: DRIVER_FAULT),
4354	tsc_mcs_hk	tsc_warnings	UINT4	N/A	%u	BIT	0	4294967295	Detected TSC warning condition(0: NO_MSG_RECEIVED), (1: NO_MSG_SENT), (2: ALGO_FAULT), (3: CONFIG_DATA_NOT_VALID), (4: CMD_WRONG), (8: CAN_FAULT), (16: VIS_FAULT), (17: RIA_FAULT), (18: OSTC_FAULT), (19: FDTC_FAULT), (20: FD_FAULT), (21: CD_FAULT), (22: BD_FAULT), (24: PUA_1_FAULT), (25: PUA_2_FAULT), (26: PUB_FAULT), (28: POWER_FAULT_BD), (29: POWER_FAULT_CD), (30: POWER_FAULT_FD), (31: POWER_FAULT_RIA),
4355	tsc_mcs_hk	ria_status	UINT1	N/A	%u	ENUM	80	92	Status of the rotation isolation assembly(80: RIA_SHUTDOWN), (88: RIA_DEACTIVATE), (89: RIA_EMPTY_RETURN_TANKS), (90: RIA_SHORTCUT_LINE), (91: RIA_BEARING_FLUSHED), (92: RIA_BEARING_OPERATIONAL),

	A	B	C	D	E	F	G	H	I
4356	tsc_mcs_hk	ria_errors	UINT4	N/A	%u	BIT	0	4294967295	Error condition detected by rotation isolation assembly subsystem controller(0: RIA_MAINT_VALVE_ERR), (1: RIA_SUPPLY_LINE_VALVE_ERR), (2: RIA_BYPASS_VALVE_ERR), (3: RIA_RETURN_LINE_VALVE_ERR), (4: RIA_RETURN_VENT_VALVE_ERR), (5: RIA_MAIN_PUMP_ERR), (6: RIA_RETURN_PUMP_1_ERR), (7: RIA_RETURN_PUMP_2_ERR), (8: RIA_MAIN_TANK_LEVEL_ERR), (9: RIA_LABY_LEVEL_ERR), (10: RIA_LEAKAGE_PAN), (11: RIA_LEAKAGE_SUPPLY_LINE), (12: RIA_LEAKAGE_RETURN_LINE), (13: RIA_PRESSURE_OS_SUPPLY_LINE_ERR), (14: RIA_PRESSURE_HB_SUPPLY_LINE_ERR), (15: RIA_LEAKAGE_BYPASS), (19: RIA_RETURN_TANK_1_ERR), (20: RIA_RETURN_TANK_2_ERR), (21: RIA_RETURN_TANK_1_LEVEL_ERR), (22: RIA_RETURN_TANK_2_LEVEL_ERR), (30: RIA_CONFIG_ERR), (31: RIA_DRIVER_FAULT),
4357	tsc_mcs_hk	ria_warnings	UINT4	N/A	%u	BIT	0	4294967295	Warning condition detected by rotation isolation assembly subsystem controller(0: RIA_NO_MSG_RECEIVED), (1: RIA_NO_MSG_SENT), (2: RIA_ALGO_FAULT), (3: RIA_CONFIG_DATA_DEFAULT), (4: RIA_CMD_WRONG), (5: RIA_OIL_FILTER_WARN), (6: RIA_PRESSURE_SEAL_WARN), (7: RIA_PRESSURE_HB_SUPPLY_LINE_OUT_OF_RANGE), (8: RIA_PRESSURE_POCKET_WARN), (9: RIA_RETURN_TANK1_LEVEL_WARN), (10: RIA_RETURN_TANK2_LEVEL_WARN), (11: RIA_MAIN_TANK_LEVEL_WARN), (12: RIA_LEAKAGE_BYPASS), (13: RIA_LEAKAGE_SUPPLY_LINE), (14: RIA_LEAKAGE_RETURN_LINE), (15: RIA_LABYRINTH_LEVEL_WARN), (16: RIA_GAP_HB_OUT_OF_RANGE), (17: RIA_SENSOR_FAULT), (18: RIA_PRESSURE_OS_SUPPLY_LINE_WARN), (19: RIA_PRESSURE_SEAL_OP_LIMIT), (20: RIA_CD_MAINTENANCE), (21: RIA_GAP_HB_OP_LIMIT), (22: RIA_PRESSURE_HB_RETURN_LINE_WARN), (23: RIA_TEMP_DEV_OP_LIMIT),
4358	tsc_mcs_hk	ria_stat_valves	UINT2	N/A	%u	BIT	0	65535	Status of rotation isolation assembly valves(0: RIA_SUPPLY_LINE_VALVE_OPEN), (1: RIA_BYPASS_VALVE_OPEN), (2: RIA_RETURN_LINE_VALVE_OPEN), (3: RIA_RETURN_VENT_VALVE_OPEN), (4: RIA_SUPPLY_LINE_VALVE_CLOSED), (5: RIA_BYPASS_VALVE_CLOSED), (6: RIA_RETURN_LINE_VALVE_CLOSED), (7: RIA_RETURN_VENT_VALVE_CLOSED), (8: RIA_MAINT_VALVE1_OPEN), (9: RIA_MAINT_VALVE2_OPEN),
4359	tsc_mcs_hk	ria_stat_pumps	UINT1	N/A	%u	BIT	0	255	Status of rotation isolation assembly pumps(0: RIA_MAIN_PUMP_ENABLE), (1: RIA_MAIN_PUMP_HIGH_RATE), (2: RIA_RETURN_PUMP1_ENABLE), (3: RIA_RETURN_PUMP1_HIGH_RATE), (4: RIA_RETURN_PUMP2_ENABLE), (5: RIA_RETURN_PUMP2_HIGH_RATE),
4360	tsc_mcs_hk	ria_level_mt	UINT1	N/A	%u	ENUM	1	4	Level of the rotation isolation assembly main tank(1: RIA_LEVEL_EMPTY), (2: RIA_LEVEL_LOW), (3: RIA_LEVEL_MEDIUM), (4: RIA_LEVEL_HIGH),

	A	B	C	D	E	F	G	H	I
4361	tsc_mcs_hk	ria_level_rt1	UINT1	N/A	%u	ENUM	1	4	Level of the rotation isolation assembly return tank #1(1: RIA_LEVEL_EMPTY), (2: RIA_LEVEL_LOW), (3: RIA_LEVEL_MEDIUM), (4: RIA_LEVEL_HIGH),
4362	tsc_mcs_hk	ria_level_rt2	UINT1	N/A	%u	ENUM	1	4	Level of the rotation isolation assembly return tank #2(1: RIA_LEVEL_EMPTY), (2: RIA_LEVEL_LOW), (3: RIA_LEVEL_MEDIUM), (4: RIA_LEVEL_HIGH),
4363	tsc_mcs_hk	ria_level_laby1	UINT1	N/A	%u	ENUM	1	4	Status of the rotation isolation assembly labyrinth #1 level(1: RIA_LEVEL_EMPTY), (2: RIA_LEVEL_LOW), (3: RIA_LEVEL_MEDIUM), (4: RIA_LEVEL_HIGH),
4364	tsc_mcs_hk	ria_level_laby2	UINT1	N/A	%u	ENUM	1	4	Status of the rotation isolation assembly labyrinth #2 level(1: RIA_LEVEL_EMPTY), (2: RIA_LEVEL_LOW), (3: RIA_LEVEL_MEDIUM), (4: RIA_LEVEL_HIGH),
4365	tsc_mcs_hk	ria_press_hb_supply_line	FLOAT4	bars	%lf	NUMBER	-0.3	100	Actual pressure of the hydrostatic bearing oil supply line
4366	tsc_mcs_hk	ria_press_hb_return_line	FLOAT4	bars	%lf	NUMBER	-0.3	100	Actual pressure of the hydrostatic bearing oil return line
4367	tsc_mcs_hk	ria_gap_hb_1	FLOAT4	micrometers	%lf	NUMBER	-100	500	Actual hydrostatic bearing gap at sensor location 1 (status TBD)
4368	tsc_mcs_hk	ria_gap_hb_2	FLOAT4	micrometers	%lf	NUMBER	-100	500	Actual hydrostatic bearing gap at sensor location 2 (status TBD)
4369	tsc_mcs_hk	ria_gap_hb_3	FLOAT4	micrometers	%lf	NUMBER	-100	500	Actual hydrostatic bearing gap at sensor location 3 (status TBD)
4370	tsc_mcs_hk	ria_gap_hb_4	FLOAT4	micrometers	%lf	NUMBER	-100	500	Actual hydrostatic bearing gap at sensor location 4 (status TBD)
4371	tsc_mcs_hk	ria_gap_hb_5	FLOAT4	micrometers	%lf	NUMBER	-100	500	Actual hydrostatic bearing gap at sensor location 5 (status TBD)
4372	tsc_mcs_hk	ria_gap_hb_6	FLOAT4	micrometers	%lf	NUMBER	-100	500	Actual hydrostatic bearing gap at sensor location 6 (status TBD)
4373	tsc_mcs_hk	ria_gap_hb_7	FLOAT4	micrometers	%lf	NUMBER	-100	500	Actual hydrostatic bearing gap at sensor location 7 (status TBD)
4374	tsc_mcs_hk	ria_gap_hb_8	FLOAT4	micrometers	%lf	NUMBER	-100	500	Actual hydrostatic bearing gap at sensor location 8 (status TBD)
4375	tsc_mcs_hk	ostc_status	UINT1	N/A	%u	ENUM	80	84	Status of the oil supply thermal control(80: OSTC_SHUTDOWN), (81: OSTC_MT_HEAT_UP), (82: OSTC_MT_COOL_DOWN), (83: OSTC_STAB_HB_TEMP_FDTC_OFF), (84: OSTC_STAB_HB_TEMP_FDTC_ON),
4376	tsc_mcs_hk	ostc_errors	UINT4	N/A	%u	BIT	0	4294967295	Error condition detected by the oil supply thermal control subsystem controller(0: OSTC_MIX_VAL_ERR), (1: OSTC_FLOW_ERR), (2: OSTC_LEAKAGE_ERR), (3: OSTC_PUMP_ERR), (4: OSTC_HEATER_ERR), (5: OSTC_TEMP_DEV_ERR), (6: OSTC_SENSOR_ERR), (7: OSTC_TEMP_MT_FAULT), (8: OSTC_TEMP_AIR_CABIN_FAULT), (9: OSTC_TEMP_OS_SUPPLY_LINE_FAULT), (10: OSTC_TEMP_HB_RING_FAULT), (30: OSTC_CONFIG_ERR), (31: OSTC_DRIVER_FAULT),

	A	B	C	D	E	F	G	H	I
4377	tsc_mcs_hk	ostc_warnings	UINT4	N/A	%u	BIT	0	4294967295	Warning condition detected by the oil supply thermal control subsystem controller(0: OSTC_NO_MSG_RECEIVED), (1: OSTC_NO_MSG_SENT), (2: OSTC_ALGO_FAULT), (3: OSTC_CONFIG_DATA_DEFAULT), (4: OSTC_CMD_WRONG), (5: OSTC_MT_TEMP_OUT_OF_RANGE), (6: OSTC_OS_SUPPLY_LINE_TEMP_TOO_LOW_M1), (7: OSTC_OS_SUPPLY_LINE_TEMP_TOO_LOW), (8: OSTC_OS_SUPPLY_LINE_TEMP_TOO_HIGH), (9: OSTC_TEMP_HB_CABIN_OUT_OF_RANGE), (10: OSTC_TEMP_HB_CAVITY_OUT_OF_RANGE), (11: OSTC_TEMP_AIR_CABIN_OUT_OF_RANGE), (12: OSTC_TEMP_AIR_CAVITY_OUT_OF_RANGE), (13: OSTC_TEMP_DEV_OP_LIMIT), (14: OSTC_MT_TEMP_TOO_LOW), (15: OSTC_ACTUATOR_RANGE_EXCEEDED), (16: OSTC_TIMEOUT_NT_FANS), (17: OSTC_OVER_CURR_NT_FAN1), (18: OSTC_OVER_CURR_NT_FAN2), (19: OSTC_SENSOR_FAULT), (20: OSTC_OS_SUPPLY_LINE_TEMP_OUT_OF_RANGE), (21: OSTC_HB_SUPPLY_LINE_TEMP_OUT_OF_RANGE), (22: OSTC_HB_RETURN_LINE_TEMP_OUT_OF_RANGE),
4378	tsc_mcs_hk	ostc_temp_mt	FLOAT4	degrees Celsius	%lf	NUMBER	0	100	Temperature of oil supply thermal control main tank
4379	tsc_mcs_hk	ostc_temp_hb_mean	FLOAT4	degrees Celsius	%lf	NUMBER	-200	700	Temperature of the oil supply thermal control hydrostatic bearing ring, calculated by taking the mean value of the cabin and cavity temperatures
4380	tsc_mcs_hk	ostc_stat_pump	UINT1	N/A	%u	BIT	0	3	Status of the oil supply thermal control pump(0: OSTC_PUMP_ENABLED), (1: OSTC_PUMP_HIGH_RATE),
4381	tsc_mcs_hk	ostc_stat_heaters	UINT1	N/A	%u	BIT	0	3	Status of the oil supply thermal control heaters(0: OSTC_HEATER1_ENABLE), (1: OSTC_HEATER2_ENABLE),
4382	tsc_mcs_hk	ostc_act_mix_valve	FLOAT4	N/A	%lf	NUMBER	-0.1	1	Actual position of the oil supply thermal control mix valve (0 = fully closed .. 1 = fully open)
4383	tsc_mcs_hk	ths_temp_air_cabin	FLOAT4	degrees Celsius	%lf	NUMBER	-200	700	Thermal subsystem air temperature on the cabin side
4384	tsc_mcs_hk	ths_temp_air_cavity	FLOAT4	degrees Celsius	%lf	NUMBER	-50	200	Thermal subsystem air temperature on the cavity side
4385	tsc_mcs_hk	ths_stat_nt_fans	UINT1	N/A	%u	BIT	0	3	Thermal subsystem fan status(0: THS_FAN_1_ENABLED), (1: THS_FAN_2_ENABLED), (2: THS_FAN_1_FAULT), (3: THS_FAN_2_FAULT),
4386	tsc_mcs_hk	fdtc_status	UINT1	N/A	%u	ENUM	80	90	Status of fine drive thermal control(80: FDTC_SHUTDOWN), (90: FDTC_STABILIZE_FD_TEMP),
4387	tsc_mcs_hk	fdtc_errors	UINT4	N/A	%u	BIT	0	4294967295	Error condition detected by fine drive thermal control subsystem controller(0: FDTC_MIX_VALVE_ERR), (1: FDTC_FLOW_ERR), (2: FDTC_LEAKAGE_ERR), (3: FDTC_PUMP_ERR), (4: FDTC_TEMP_DEV_ERR), (30: FDTC_CONFIG_ERR), (31: FDTC_DRIVER_FAULT),

	A	B	C	D	E	F	G	H	I
4388	tsc_mcs_hk	fdtc_warnings	UINT4	N/A	%u	BIT	0	4294967295	Warning condition detected by fine drive thermal control subsystem controller(0: FDTC_NO_MSG_RECEIVED), (1: FDTC_NO_MSG_SENT), (2: FDTC_ALGO_FAULT), (3: FDTC_CONFIG_DATA_DEFAULT), (4: FDTC_CMD_WRONG), (5: FDTC_TEMP_FD_IN_TOO_LOW), (6: FDTC_TEMP_FD_IN_TOO_HIGH), (7: FDTC_TEMP_FD_OUT_TOO_LOW), (8: FDTC_TEMP_FD_OUT_TOO_HIGH), (9: FDTC_TEMP_AIR_CABIN_OUT_OF_RANGE), (10: FDTC_TEMP_AIR_CAVITY_OUT_OF_RANGE), (11: FDTC_TEMP_DEV_OP_LIMIT), (12: FDTC_ACTUATOR_RANGE_EXCEEDED), (13: FDTC_SENSOR_FAULT),
4389	tsc_mcs_hk	fdtc_stat_pump	UINT1	N/A	%u	BIT	0	3	Fine drive thermal control pump status(0: FDTC_PUMP_ENABLED), (1: FDTC_PUMP_RATE),
4390	tsc_mcs_hk	fdtc_temp_fd	FLOAT4	degrees Celsius	%lf	NUMBER	-25	100	Mean temperature of thermal subsystem FD inlet and outlet sensors
4391	tsc_mcs_hk	fdtc_temp_des_fd	FLOAT4	degrees Celsius	%lf	NUMBER	-50	200	Calculated set-point of the fine drive temperature from the thermal subsystem air temperature sensors
4392	tsc_mcs_hk	fdtc_act_mix_valve	FLOAT4	N/A	%lf	NUMBER	-0.1	1	Actual position of the mixing valve (0 = fully closed .. 1 = fully open)
4393	tsc_mcs_hk	fdtc_switches	UINT1	N/A	%u	BIT	0	3	Fine drive thermal control switch status(0: FDTC_PRESS_SWITCH), (1: FDTC_FLOW_SWITCH),
4394	tsc_mcs_hk	vis_status_auto	UINT1	N/A	%u	ENUM	1	2	Subsystem status of the vibration isolation system for automated adjustment(1: DISABLED), (2: ENABLED),
4395	tsc_mcs_hk	vis_status_ax	UINT2	N/A	%u	ENUM	1022	1029	General subsystem status of the vibration isolation system during adjustment in the axial direction(1022: VIS_SHUTDOWN), (1023: VIS_STANDBY), (1024: VIS_ADJUST), (1025: VIS_CAGED), (1026: VIS_BACKUP), (1027: VIS_PRESSURIZE), (1028: VIS_CAGE), (1029: VIS_EVACUATE),
4396	tsc_mcs_hk	vis_status_tgy	UINT2	N/A	%u	ENUM	1022	1029	General subsystem status of the vibration isolation system during adjustment in the tangential y direction(1022: VIS_SHUTDOWN), (1023: VIS_STANDBY), (1024: VIS_ADJUST), (1025: VIS_CAGED), (1026: VIS_BACKUP), (1027: VIS_PRESSURIZE), (1028: VIS_CAGE), (1029: VIS_EVACUATE),
4397	tsc_mcs_hk	vis_status_tgz	UINT2	N/A	%u	ENUM	1022	1029	General subsystem status of the vibration isolation system during adjustment in the tangential z direction(1022: VIS_SHUTDOWN), (1023: VIS_STANDBY), (1024: VIS_ADJUST), (1025: VIS_CAGED), (1026: VIS_BACKUP), (1027: VIS_PRESSURIZE), (1028: VIS_CAGE), (1029: VIS_EVACUATE),

	A	B	C	D	E	F	G	H	I
4398	tsc_mcs_hk	vis_errors_e1	UINT4	N/A	%u	BIT	0	4294967295	Error condition detected by vibration isolation subsystem controller(0: VIS_POS_SENSOR_AX_1_OUT_OF_RANGE), (1: VIS_POS_SENSOR_AX_2_OUT_OF_RANGE), (2: VIS_POS_SENSOR_AX_3_OUT_OF_RANGE), (3: VIS_POS_SENSOR_TANG_1_OUT_OF_RANGE), (4: VIS_POS_SENSOR_TANG_2_OUT_OF_RANGE), (5: VIS_POS_SENSOR_TANG_3_OUT_OF_RANGE), (6: VIS_POS_SENSOR_TANG_4_OUT_OF_RANGE), (7: VIS_TP4_OUT_OF_RANGE), (8: VIS_TP5_OUT_OF_RANGE), (9: VIS_TP6_OUT_OF_RANGE), (12: TIMEOUT_CENTER_AX), (13: TIMEOUT_ADJUST_TG_Z), (14: TIMEOUT_ADJUST_TG_Y), (15: TIMEOUT_ADJUST_AX), (16: VIS_PRESS_ERROR_TG_1), (17: VIS_PRESS_ERROR_TG_2), (18: VIS_PRESS_ERROR_TG_3), (19: VIS_PRESS_ERROR_TG_4), (20: VIS_PRESS_ERROR_TG_5), (21: VIS_PRESS_ERROR_TG_6), (22: VIS_PRESS_ERROR_TG_7), (23: VIS_PRESS_ERROR_TG_8), (24: VIS_PRESS_ERROR_TG_9), (25: VIS_PRESS_ERROR_TG_10), (26: VIS_PRESS_ERROR_TG_11), (27: VIS_PRESS_ERROR_TG_12), (29: SENSOR_FAULT), (30: CONFIG_ERR), (31: DRIVER_FAULT),
4399	tsc_mcs_hk	vis_errors_e2	UINT4	N/A	%u	BIT	0	4294967295	Error condition detected by vibration isolation subsystem controller(0: VIS_AP1_OUT_OF_RANGE), (1: VIS_AP2_OUT_OF_RANGE), (2: VIS_AP3_OUT_OF_RANGE), (3: VIS_MAIN_PRESS_OUT_OF_RANGE), (4: VIS_PRESS_ERROR_AX_1), (5: VIS_PRESS_ERROR_AX_2), (6: VIS_PRESS_ERROR_AX_3), (7: VIS_PRESS_ERROR_AX_4), (8: VIS_PRESS_ERROR_AX_5), (9: VIS_PRESS_ERROR_AX_6), (10: VIS_PRESS_ERROR_AX_7), (11: VIS_PRESS_ERROR_AX_8), (12: VIS_PRESS_ERROR_AX_9), (13: VIS_PRESS_ERROR_AX_10), (14: VIS_PRESS_ERROR_AX_11), (15: VIS_PRESS_ERROR_AX_12), (16: VIS_MAIN_PRESS_ERROR), (17: VIS_AP1_PRESS_ERROR), (18: VIS_AP2_PRESS_ERROR), (19: VIS_AP3_PRESS_ERROR), (20: VIS_TP4_PRESS_ERROR), (21: VIS_TP5_PRESS_ERROR), (22: VIS_TP6_PRESS_ERROR),
4400	tsc_mcs_hk	vis_fatal_errors	UINT4	N/A	%u	BIT	0	4294967295	Fatal error condition detected by vibration isolation subsystem controller(0: VIS_P2L), (1: VIS_P2H), (2: TIMEOUT_PRESSURIZE), (3: TIMEOUT_EVACUATE), (4: TIMEOUT_CAGE),
4401	tsc_mcs_hk	vis_warnings	UINT4	N/A	%u	BIT	0	4294967295	Warning condition detected by vibration isolation subsystem controller(0: VIS_NO_MSG_RECEIVED), (1: VIS_NO_MSG_SENT), (2: VIS_ALGO_FAULT), (3: VIS_CONFIG_DATA_DEFAULT), (4: VIS_CMD_WRONG), (5: VIS_PCONST_OUT_OF_RANGE), (6: VIS_CONST_PRESS_ERROR), (7: VIS_VENT_CAPTOR_ERROR), (8: VIS_CAN_FAULT), (9: VIS_POSITION_ERROR), (29: VIS_OVERPRESSURE), (30: VIS_POWER_FAULT_VIS), (31: VIS_PUC_FAULT),
4402	tsc_mcs_hk	vis_posi_ax_g1	FLOAT4	millimeters	%lf	NUMBER	-30	30	VIS axial position sensor 1

	A	B	C	D	E	F	G	H	I
4403	tsc_mcs_hk	vis_posi_ax_g2	FLOAT4	millimeters	%lf	NUMBER	-30	30	VIS axial position sensor 2
4404	tsc_mcs_hk	vis_posi_ax_g3	FLOAT4	millimeters	%lf	NUMBER	-30	30	VIS axial position sensor 3
4405	tsc_mcs_hk	vis_posi_ax_x	FLOAT4	millimeters	%lf	NUMBER	-30	30	VIS axial position (telescope center)
4406	tsc_mcs_hk	vis_posi_tg_1	FLOAT4	millimeters	%lf	NUMBER	-30	30	VIS tangential position sensor 1
4407	tsc_mcs_hk	vis_posi_tg_2	FLOAT4	millimeters	%lf	NUMBER	-30	30	VIS tangential position sensor 2
4408	tsc_mcs_hk	vis_posi_tg_3	FLOAT4	millimeters	%lf	NUMBER	-30	30	VIS tangential position sensor 3
4409	tsc_mcs_hk	vis_posi_tg_4	FLOAT4	millimeters	%lf	NUMBER	-30	30	VIS tangential position sensor 4
4410	tsc_mcs_hk	vis_posi_lp_ax_x	FLOAT4	millimeters	%lf	NUMBER	-30	30	VIS axial position (telescope center) that has been low pass filtered
4411	tsc_mcs_hk	vis_posi_lp_tg_y	FLOAT4	millimeters	%lf	NUMBER	-30	30	VIS tangential y position that has been low pass filtered
4412	tsc_mcs_hk	vis_posi_lp_tg_z	FLOAT4	millimeters	%lf	NUMBER	-30	30	VIS tangential z position that has been low pass filtered
4413	tsc_mcs_hk	bd_status	UINT1	N/A	%u	ENUM	80	87	Operation mode of the balance drive(80: BD_SHUTDOWN), (81: BD_STANDBY), (82: BD_ACTIVE), (83: BD_MOTION_SLEW), (84: BD_MOTION_POS_ABS), (85: BD_MOTION_POS_REL), (86: BD_MOTION_AUTOBAL), (87: BD_MOTION_STOP),
4414	tsc_mcs_hk	bd_status_motion	UINT1	N/A	%u	ENUM	70	73	Status and phase of balance drive motion. Possible values are: BRAKE_ON (brakes are applied), TRANSIENT (desired position not equal to commanded position), SETTLE (control loop deviation outside limit), and LOCKED (control loop deviation within limit)(70: BD_BRAKE_ON), (71: BD_TRANSIENT), (72: BD_SETTLE), (73: BD_LOCKED),
4415	tsc_mcs_hk	bd_switches	UINT4	N/A	%u	BIT	0	4294967295	Balance drive limit switches(0: BD_HW_DOWN1), (1: BD_HW_DOWN2), (2: BD_HW_DOWN3), (3: BD_HW_DOWN4), (4: BD_HW_UP1), (5: BD_HW_UP2), (6: BD_HW_UP3), (7: BD_HW_UP4), (8: BD_SW_DOWN_U), (9: BD_SW_DOWN_V), (10: BD_SW_DOWN_W), (12: BD_SW_UP_U), (13: BD_SW_UP_V), (14: BD_SW_UP_W), (15: BD_OVERRIDE),
4416	tsc_mcs_hk	bd_errors_1	UINT4	N/A	%u	BIT	0	4294967295	Error conditions detected on balance drive motor 1 by the balance drive subsystem controller(0: BD_AMPL_ERR), (4: BD_BRAKE_ERR), (8: BD_BRAKE_TIMEOUT), (9: BD_AMPL_POWER_TIMEOUT), (10: BD_AMPL_ENABLE_TIMEOUT), (11: BD_POS_DEV_EXCEEDED), (12: BD_POS_SENSOR_ERR), (13: BD_POS_SENSOR_OUT_OF_RANGE), (16: BD_RATE_SENSOR_ERR), (20: BD_RATE_SENSOR_OUT_OF_RANGE), (24: BD_RATE_DEV_EXCEEDED), (25: BD_HW_LIMIT), (28: BD_CHKC_COMM_FAULT), (29: BD_INTERLOCK), (30: BD_CONFIG_ERR), (31: BD_DRIVER_FAULT),

	A	B	C	D	E	F	G	H	I
4417	tsc_mcs_hk	bd_errors_2	UINT4	N/A	%u	BIT	0	4294967295	Error conditions detected on balance drive motor 2 by the balance drive subsystem controller(0: BD_AMPL_ERR), (4: BD_BRAKE_ERR), (8: BD_BRAKE_TIMEOUT), (9: BD_AMPL_POWER_TIMEOUT), (10: BD_AMPL_ENABLE_TIMEOUT), (11: BD_POS_DEV_EXCEEDED), (12: BD_POS_SENSOR_ERR), (13: BD_POS_SENSOR_OUT_OF_RANGE), (16: BD_RATE_SENSOR_ERR), (20: BD_RATE_SENSOR_OUT_OF_RANGE), (24: BD_RATE_DEV_EXCEEDED), (25: BD_HW_LIMIT), (28: BD_CHKC_COMM_FAULT), (29: BD_INTERLOCK), (30: BD_CONFIG_ERR), (31: BD_DRIVER_FAULT),
4418	tsc_mcs_hk	bd_errors_3	UINT4	N/A	%u	BIT	0	4294967295	Error conditions detected on balance drive motor 3 by the balance drive subsystem controller(0: BD_AMPL_ERR), (4: BD_BRAKE_ERR), (8: BD_BRAKE_TIMEOUT), (9: BD_AMPL_POWER_TIMEOUT), (10: BD_AMPL_ENABLE_TIMEOUT), (11: BD_POS_DEV_EXCEEDED), (12: BD_POS_SENSOR_ERR), (13: BD_POS_SENSOR_OUT_OF_RANGE), (16: BD_RATE_SENSOR_ERR), (20: BD_RATE_SENSOR_OUT_OF_RANGE), (24: BD_RATE_DEV_EXCEEDED), (25: BD_HW_LIMIT), (28: BD_CHKC_COMM_FAULT), (29: BD_INTERLOCK), (30: BD_CONFIG_ERR), (31: BD_DRIVER_FAULT),
4419	tsc_mcs_hk	bd_errors_4	UINT4	N/A	%u	BIT	0	4294967295	Error conditions detected on balance drive motor 4 by the balance drive subsystem controller(0: BD_AMPL_ERR), (4: BD_BRAKE_ERR), (8: BD_BRAKE_TIMEOUT), (9: BD_AMPL_POWER_TIMEOUT), (10: BD_AMPL_ENABLE_TIMEOUT), (11: BD_POS_DEV_EXCEEDED), (12: BD_POS_SENSOR_ERR), (13: BD_POS_SENSOR_OUT_OF_RANGE), (16: BD_RATE_SENSOR_ERR), (20: BD_RATE_SENSOR_OUT_OF_RANGE), (24: BD_RATE_DEV_EXCEEDED), (25: BD_HW_LIMIT), (28: BD_CHKC_COMM_FAULT), (29: BD_INTERLOCK), (30: BD_CONFIG_ERR), (31: BD_DRIVER_FAULT),
4420	tsc_mcs_hk	bd_warnings	UINT4	N/A	%u	BIT	0	4294967295	Warning condition detected by balance drive controller(0: BD_NO_MSG_RECEIVED), (1: BD_NO_MSG_SENT), (2: BD_ALGO_FAULT), (3: BD_CONFIG_DATA_NOT_VALID), (4: BD_CMD_WRONG), (5: BD_U_MAX_M_EXCEEDED), (6: BD_U_MAX_M_RMS), (7: BD_MAX_RATE_EXCEEDED), (8: BD_POS_SENSOR_WARN), (9: BD_U_MOTORS_DEVIATION), (10: BD_SW_LIMIT),
4421	tsc_mcs_hk	bd_status_ampl_1	UINT2	N/A	%u	BIT	0	65535	Balance drive amplifier 1 status(0: BD_POWERED_UP), (1: BD_AMPL_ENABLED), (2: BD_AMPL_ERROR), (4: BD_AMPL_OVER_TEMP), (6: BD_OVER_CURRENT_PEAK), (7: BD_OVER_VOLTAGE), (8: BD_UNDER_VOLTAGE), (9: BD_SENSOR_FAULT), (10: BD_TIME_OVERLOAD_ERROR), (11: BD_TIME_OVERLOAD_WARNING),
4422	tsc_mcs_hk	bd_status_ampl_2	UINT2	N/A	%u	BIT	0	65535	Balance drive amplifier 2 status(0: BD_POWERED_UP), (1: BD_AMPL_ENABLED), (2: BD_AMPL_ERROR), (4: BD_AMPL_OVER_TEMP), (6: BD_OVER_CURRENT_PEAK), (7: BD_OVER_VOLTAGE), (8: BD_UNDER_VOLTAGE), (9: BD_SENSOR_FAULT), (10: BD_TIME_OVERLOAD_ERROR), (11: BD_TIME_OVERLOAD_WARNING),

	A	B	C	D	E	F	G	H	I
4423	tsc_mcs_hk	bd_status_ampl_3	UINT2	N/A	%u	BIT	0	65535	Balance drive amplifier 3 status(0: BD_POWERED_UP), (1: BD_AMPL_ENABLED), (2: BD_AMPL_ERROR), (4: BD_AMPL_OVER_TEMP), (6: BD_OVER_CURRENT_PEAK), (7: BD_OVER_VOLTAGE), (8: BD_UNDER_VOLTAGE), (9: BD_SENSOR_FAULT), (10: BD_TIME_OVERLOAD_ERROR), (11: BD_TIME_OVERLOAD_WARNING),
4424	tsc_mcs_hk	bd_status_ampl_4	UINT2	N/A	%u	BIT	0	65535	Balance drive amplifier 4 status(0: BD_POWERED_UP), (1: BD_AMPL_ENABLED), (2: BD_AMPL_ERROR), (4: BD_AMPL_OVER_TEMP), (6: BD_OVER_CURRENT_PEAK), (7: BD_OVER_VOLTAGE), (8: BD_UNDER_VOLTAGE), (9: BD_SENSOR_FAULT), (10: BD_TIME_OVERLOAD_ERROR), (11: BD_TIME_OVERLOAD_WARNING),
4425	tsc_mcs_hk	bd_des_pos_u	FLOAT4	millimeters	%lf	NUMBER	1702	2232	Desired balance drive position for motion axis u
4426	tsc_mcs_hk	bd_des_pos_v	FLOAT4	millimeters	%lf	NUMBER	-257	273	Desired balance drive position for motion axis v
4427	tsc_mcs_hk	bd_des_pos_w	FLOAT4	millimeters	%lf	NUMBER	864	1394	Desired balance drive position for motion axis w
4428	tsc_mcs_hk	bd_cmd_pos_u	FLOAT4	millimeters	%lf	NUMBER	1702	2232	Commanded balance drive position for motion axis u
4429	tsc_mcs_hk	bd_cmd_pos_v	FLOAT4	millimeters	%lf	NUMBER	-257	273	Commanded balance drive position for motion axis v
4430	tsc_mcs_hk	bd_cmd_pos_w	FLOAT4	millimeters	%lf	NUMBER	864	1394	Commanded balance drive position for motion axis w
4431	tsc_mcs_hk	bd_act_pos_u	FLOAT4	millimeters	%lf	NUMBER	1687	2252	Actual balance drive position for motion axis u
4432	tsc_mcs_hk	bd_act_pos_v	FLOAT4	millimeters	%lf	NUMBER	-272	293	Actual balance drive position for motion axis v
4433	tsc_mcs_hk	bd_act_pos_w	FLOAT4	millimeters	%lf	NUMBER	844	1409	Actual balance drive position for motion axis w
4434	tsc_mcs_hk	bd_rate_u	FLOAT4	millimeters per second	%lf	NUMBER	-2.5	2.5	Actual balance drive rate for motion axis u
4435	tsc_mcs_hk	bd_rate_v	FLOAT4	millimeters per second	%lf	NUMBER	-2.5	2.5	Actual balance drive rate for motion axis v
4436	tsc_mcs_hk	bd_rate_w	FLOAT4	millimeters per second	%lf	NUMBER	-2.5	2.5	Actual balance drive rate for motion axis w
4437	tsc_mcs_hk	cd_status	UINT1	N/A	%u	ENUM	80	88	Operation mode of the coarse drive(80: CD_SHUTDOWN), (81: CD_STANDBY), (82: CD_ACTIVE), (83: CD_MOTION_SLEW), (84: CD_MOTION_POS_ABS), (85: CD_MOTION_POS_REL), (86: CD_MOTION_COUPLE_CONT), (87: CD_MOTION_COUPLE_STEP), (88: CD_MOTION_STOP),
4438	tsc_mcs_hk	cd_status_motion	UINT1	N/A	%u	ENUM	70	73	Status and phase of coarse drive motion. Possible values are: BRAKE_ON (brakes are applied), TRANSIENT (desired position not equal to commanded position), SETTLE (control loop deviation outside limit), and LOCKED (control loop deviation within limit)(70: CD_BRAKE_ON), (71: CD_TRANSIENT), (72: CD_SETTLE), (73: CD_LOCKED),

	A	B	C	D	E	F	G	H	I
4439	tsc_mcs_hk	cd_switches	UINT4	N/A	%u	BIT	0	4294967295	Coarse drive limit, override, and maintenance switches(0: CD_SW_DOWN), (1: CD_SW_UP), (2: CD_HW_FINAL1_DOWN), (3: CD_HW_FINAL1_UP), (4: CD_HW_FINAL2_DOWN), (5: CD_HW_FINAL2_UP), (6: CD_MT_SW_DOWN), (7: CD_MT_SW_UP), (8: CD_MT_HW_FINAL_DOWN), (9: CD_MT_HW_FINAL_UP), (10: CD_STOW_IN), (11: CD_OVERRIDE), (12: CD_MAINT_MODE),
4440	tsc_mcs_hk	cd_errors	UINT4	N/A	%u	BIT	0	4294967295	Error condition detected by coarse drive subsystem controller(0: CD_OVER_RATE), (1: CD_POS_ENCODER_ERR), (2: CD_POS_ENCODER_OUT_OF_RANGE), (3: CD_RATE_SENSOR_1_ERR), (4: CD_RATE_SENSOR_1_OUT_OF_RANGE), (5: CD_RATE_SENSOR_2_ERR), (6: CD_RATE_SENSOR_2_OUT_OF_RANGE), (7: CD_RATE_SENSOR_3_ERR), (8: CD_RATE_SENSOR_3_OUT_OF_RANGE), (9: CD_RATE_SENSOR_4_ERR), (10: CD_RATE_SENSOR_4_OUT_OF_RANGE), (11: CD_AMPL_1_ERR), (12: CD_AMPL_2_ERR), (13: CD_AMPL_3_ERR), (14: CD_AMPL_4_ERR), (15: CD_BRAKE_1_ERR), (16: CD_BRAKE_2_ERR), (17: CD_BRAKE_3_ERR), (18: CD_BRAKE_4_ERR), (19: CD_BRAKE_TIMEOUT), (20: CD_AMPL_POWER_TIMEOUT), (21: CD_AMPL_ENABLE_TIMEOUT), (22: CD_RATE_DEV_EXCEEDED), (23: CD_POS_DEV_EXCEEDED), (24: CD_COUPLE_DEV_EXCEEDED), (25: CD_HW_LIMIT), (29: CD_SENSOR_FAULT), (30: CD_CONFIG_ERR), (31: CD_DRIVER_FAULT),
4441	tsc_mcs_hk	cd_warnings	UINT4	N/A	%u	BIT	0	4294967295	Warning condition detected by the coarse drive subsystem controller(0: CD_NO_MSG_RECEIVED), (1: CD_NO_MSG_SENT), (2: CD_ALGO_FAULT), (3: CD_CONFIG_DATA_NOT_VALID), (4: CD_CMD_WRONG), (5: CD_DEGRADED_MODE), (6: CD_U_MAX_M_EXCEEDED), (7: CD_U_MAX_M_RMS), (8: CD_MAX_RATE_EXCEEDED), (9: CD_U_MAX_COUPLE), (10: CD_POS_ENC_WARN), (11: CD_SW_LIMIT),
4442	tsc_mcs_hk	cd_status_ampl_1	UINT2	N/A	%u	BIT	0	65535	Coarse drive amplifier 1 status(0: CD_POWERED_UP), (1: CD_AMPL_ENABLED), (2: CD_AMPL_ERROR), (3: CD_MOTOR_OVER_TEMP), (4: CD_AMPL_OVER_TEMP), (5: CD_OVER_CURRENT_RMS), (6: CD_OVER_CURRENT_PEAK), (7: CD_OVER_VOLTAGE), (8: CD_UNDER_VOLTAGE), (9: CD_SENSOR_FAULT), (10: CD_TIME_OVERLOAD_ERROR), (11: CD_TIME_OVERLOAD_WARNING),
4443	tsc_mcs_hk	cd_status_ampl_2	UINT2	N/A	%u	BIT	0	65535	Coarse drive amplifier 2 status(0: CD_POWERED_UP), (1: CD_AMPL_ENABLED), (2: CD_AMPL_ERROR), (3: CD_MOTOR_OVER_TEMP), (4: CD_AMPL_OVER_TEMP), (5: CD_OVER_CURRENT_RMS), (6: CD_OVER_CURRENT_PEAK), (7: CD_OVER_VOLTAGE), (8: CD_UNDER_VOLTAGE), (9: CD_SENSOR_FAULT), (10: CD_TIME_OVERLOAD_ERROR), (11: CD_TIME_OVERLOAD_WARNING),

	A	B	C	D	E	F	G	H	I
4444	tsc_mcs_hk	cd_status_ampl_3	UINT2	N/A	%u	BIT	0	65535	Coarse drive amplifier 3 status(0: CD_POWERED_UP), (1: CD_AMPL_ENABLED), (2: CD_AMPL_ERROR), (3: CD_MOTOR_OVER_TEMP), (4: CD_AMPL_OVER_TEMP), (5: CD_OVER_CURRENT_RMS), (6: CD_OVER_CURRENT_PEAK), (7: CD_OVER_VOLTAGE), (8: CD_UNDER_VOLTAGE), (9: CD_SENSOR_FAULT), (10: CD_TIME_OVERLOAD_ERROR), (11: CD_TIME_OVERLOAD_WARNING),
4445	tsc_mcs_hk	cd_status_ampl_4	UINT2	N/A	%u	BIT	0	65535	Coarse drive amplifier 4 status(0: CD_POWERED_UP), (1: CD_AMPL_ENABLED), (2: CD_AMPL_ERROR), (3: CD_MOTOR_OVER_TEMP), (4: CD_AMPL_OVER_TEMP), (5: CD_OVER_CURRENT_RMS), (6: CD_OVER_CURRENT_PEAK), (7: CD_OVER_VOLTAGE), (8: CD_UNDER_VOLTAGE), (9: CD_SENSOR_FAULT), (10: CD_TIME_OVERLOAD_ERROR), (11: CD_TIME_OVERLOAD_WARNING),
4446	tsc_mcs_hk	cd_des_pos	FLOAT4	radians	%lf	NUMBER	0	3.142	Desired coarse drive position with regard to outer cradle, with the range equal to 0.288..1.196 if the maintenance switch is disabled and equal to 0.0..3.142 if the maintenance switch is enabled
4447	tsc_mcs_hk	cd_cmd_pos	FLOAT4	radians	%lf	NUMBER	0	3.142	Commanded coarse drive position with regard to outer cradle, with the range equal to 0.288..1.196 if the maintenance switch is disabled and equal to 0.0..3.142 if the maintenance switch is enabled
4448	tsc_mcs_hk	cd_act_pos	FLOAT4	radians	%lf	NUMBER	0	3.142	Actual coarse drive position with regard to outer cradle, with the range equal to 0.288..1.196 if the maintenance switch is disabled and equal to 0.0..3.142 if the maintenance switch is enabled
4449	tsc_mcs_hk	cd_rate	FLOAT4	radians per second	%lf	NUMBER	-0.07	0.07	Actual coarse drive movement rate
4450	tsc_mcs_hk	cd_act_torque_m1	FLOAT4	newton meters	%lf	NUMBER	-5	5	Actual torque output of coarse drive motor 1
4451	tsc_mcs_hk	cd_act_torque_m2	FLOAT4	newton meters	%lf	NUMBER	-5	5	Actual torque output of coarse drive motor 2
4452	tsc_mcs_hk	cd_act_torque_m3	FLOAT4	newton meters	%lf	NUMBER	-5	5	Actual torque output of coarse drive motor 3
4453	tsc_mcs_hk	cd_act_torque_m4	FLOAT4	newton meters	%lf	NUMBER	-5	5	Actual torque output of coarse drive motor 4
4454	tsc_mcs_hk	fd_status	UINT1	N/A	%u	ENUM	80	88	Operation mode of the fine drive(80: FD_SHUTDOWN), (81: FD_STANDBY), (82: FD_ACTIVE), (83: FD_MOTION_SLEW), (84: FD_MOTION_POS_ABS), (85: FD_MOTION_POS_REL), (86: FD_MOTION_PROG_TRACK), (88: FD_MOTION_STOP),
4455	tsc_mcs_hk	fd_status_motion	UINT1	N/A	%u	ENUM	70	73	Status and phase of fine drive motion. Possible values are: BRAKE_ON (brakes are applied), TRANSIENT (desired position not equal to commanded position), SETTLE (control loop deviation outside limit), and LOCKED (control loop deviation within limit)(70: FD_BRAKE_ON), (71: FD_TRANSIENT), (72: FD_SETTLE), (73: FD_LOCKED),
4456	tsc_mcs_hk	fd_status_offset	UINT1	N/A	%u	BIT	0	15	Status of offset for program track(0: FD_OFFSET_PROG), (1: FD_OFFSET_BIAS), (2: FD_OFFSET_TRC), (3: FD_OFFSET_TRAJ),
4457	tsc_mcs_hk	fd_program_track_id	UINT2	N/A	%u	NUMBER	0	65535	ID for the currently stored program track table

	A	B	C	D	E	F	G	H	I
4458	tsc_mcs_hk	fd_program_offset_id	UINT2	N/A	%u	NUMBER	0	65535	ID for the currently stored program offset table
4459	tsc_mcs_hk	fd_status_feedback	UINT1	N/A	%u	ENUM	0	2	Used feedback sensor- if local stabilization, then the SPS is used, and if inertial stabilization, then the Gyros are used(0: FD_NO_FEEDBACK), (1: FD_SPS), (2: FD_GYRO),
4460	tsc_mcs_hk	fd_switches_1	UINT4	N/A	%u	BIT	0	4294967295	Fine drive limit switches 1(0: FD_EL_HW_DOWN_1), (1: FD_EL_HW_DOWN_2), (2: FD_EL_HW_UP_1), (3: FD_EL_HW_UP_2), (4: FD_BRAKE_1_OPEN), (5: FD_BRAKE_2_OPEN), (6: FD_BRAKE_3_OPEN), (7: FD_BRAKE_4_OPEN), (8: FD_BRAKE_5_OPEN), (9: FD_BRAKE_6_OPEN), (10: FD_BRAKE_7_OPEN), (11: FD_BRAKE_8_OPEN), (12: FD_TEMP_SENSOR_FAULT), (13: FD_TEMP_FAULT), (14: FD_LIMIT_SENSOR_FAULT), (15: FD_BRAKE_SENSOR_FAULT), (16: FD_U_SW_DOWN), (17: FD_U_SW_UP), (18: FD_VW_SW_LIMIT), (20: FD_U_SW_OVERSPEED), (21: FD_VW_SW_OVERSPEED), (25: FD_STOW_PIN_IN), (27: FD_OVERRIDE),
4461	tsc_mcs_hk	fd_switches_2	UINT4	N/A	%u	BIT	0	4294967295	Fine drive hardware limit switches (BIT assignments still TBD)(0: FD_HW_XEL_LOS_1), (1: FD_HW_XEL_LOS_2), (2: FD_HW_XEL_LOS_3), (3: FD_HW_XEL_LOS_4), (4: FD_HW_XEL_LOS_5), (5: FD_HW_XEL_LOS_6), (6: FD_HW_XEL_LOS_7), (7: FD_HW_XEL_LOS_8), (8: FD_HW_XEL_LOS_9), (9: FD_HW_XEL_LOS_10), (10: FD_HW_XEL_LOS_11), (11: FD_HW_XEL_LOS_12), (12: FD_HW_XEL_LOS_13), (13: FD_HW_XEL_LOS_14), (14: FD_HW_XEL_LOS_15), (15: FD_HW_XEL_LOS_16), (16: FD_HW_XEL_LOS_17), (17: FD_HW_XEL_LOS_18), (18: FD_HW_XEL_LOS_19), (19: FD_HW_XEL_LOS_20), (20: FD_HW_XEL_LOS_21), (21: FD_HW_XEL_LOS_22), (22: FD_HW_XEL_LOS_23), (23: FD_HW_XEL_LOS_24), (24: FD_HW_XEL_LOS_25), (25: FD_HW_XEL_LOS_26), (26: FD_HW_XEL_LOS_27), (27: FD_HW_XEL_LOS_28), (28: FD_HW_XEL_LOS_29), (29: FD_HW_XEL_LOS_30), (30: FD_HW_XEL_LOS_31), (31: FD_HW_XEL_LOS_32),
4462	tsc_mcs_hk	fd_errors_gen	UINT2	N/A	%u	BIT	0	65535	General error condition detected by the fine drive subsystem controller(1: FD_RDACU_ERR), (2: FD_RDACU_SW_LIMIT), (3: FD_FEEDBACK_SENSOR_FAULT), (4: FD_BRAKE_TIMEOUT), (5: FD_AMPL_POWER_TIMEOUT), (6: FD_AMPL_ENABLE_TIMEOUT), (7: FD_TEMP_TORQUER_EXCEEDED), (8: FD_HARD_STOP), (10: FD_ATCU_ERR), (14: FD_CONFIG_ERR), (15: FD_DRIVER_FAULT),
4463	tsc_mcs_hk	fd_errors_u	UINT1	N/A	%u	BIT	0	255	U axis related error condition detected by the fine drive subsystem controller(0: FD_AMPL_1_ERR), (1: FD_AMPL_2_ERR), (2: FD_RATE_DEV_EXCEEDED), (3: FD_POS_DEV_EXCEEDED),
4464	tsc_mcs_hk	fd_errors_v	UINT1	N/A	%u	BIT	0	255	V axis related error condition detected by the fine drive subsystem controller(0: FD_AMPL_1_ERR), (1: FD_AMPL_2_ERR), (2: FD_RATE_DEV_EXCEEDED), (3: FD_POS_DEV_EXCEEDED),
4465	tsc_mcs_hk	fd_errors_w	UINT1	N/A	%u	BIT	0	255	W axis related error condition detected by the fine drive subsystem controller(0: FD_AMPL_1_ERR), (1: FD_AMPL_2_ERR), (2: FD_RATE_DEV_EXCEEDED), (3: FD_POS_DEV_EXCEEDED),

	A	B	C	D	E	F	G	H	I
4466	tsc_mcs_hk	fd_warnings_gen	UINT2	N/A	%u	BIT	0	255	General warning condition detected by the fine drive subsystem controller(0: FD_NO_MSG_RECEIVED), (1: FD_NO_MSG_SENT), (2: FD_ALGO_FAULT), (3: FD_CONFIG_DATA_NOT_VALID), (4: FD_CMD_WRONG), (5: FD_ATCU_COMM_FAULT), (6: FD_RDACU_COMM_FAULT), (7: FD_TRACK_TOO_EARLY), (8: FD_SW_LIMIT), (9: FD_SW_LIMIT_CLOSE),
4467	tsc_mcs_hk	fd_warnings_u	UINT1	N/A	%u	BIT	0	255	U axis related warning condition detected by the fine drive subsystem controller(0: FD_UDD_MAX_EXCEEDED), (1: FD_UDD_RMS_EXCEEDED), (2: FD_UD_MAX_EXCEEDED), (3: FD_TEMP_TORQUER_TOO_HIGH), (4: FD_TEMP_SENSOR_FAILED), (5: FD_TEMP_REDU_FAULT),
4468	tsc_mcs_hk	fd_warnings_v	UINT1	N/A	%u	BIT	0	255	V axis related warning condition detected by the fine drive subsystem controller(0: FD_UDD_MAX_EXCEEDED), (1: FD_UDD_RMS_EXCEEDED), (2: FD_UD_MAX_EXCEEDED), (3: FD_TEMP_TORQUER_TOO_HIGH), (4: FD_TEMP_SENSOR_FAILED), (5: FD_TEMP_REDU_FAULT),
4469	tsc_mcs_hk	fd_warnings_w	UINT1	N/A	%u	BIT	0	255	W axis related warning condition detected by the fine drive subsystem controller(0: FD_UDD_MAX_EXCEEDED), (1: FD_UDD_RMS_EXCEEDED), (2: FD_UD_MAX_EXCEEDED), (3: FD_TEMP_TORQUER_TOO_HIGH), (4: FD_TEMP_SENSOR_FAILED), (5: FD_TEMP_REDU_FAULT),
4470	tsc_mcs_hk	fd_interlocks	UINT4	N/A	%u	NUMBER	TBD	TBD	Indication of fine drive interlocks
4471	tsc_mcs_hk	fd_status_ampl_1	UINT2	N/A	%u	BIT	0	65535	Fine drive amplifier 1 status(0: FD_POWERED_UP), (1: FD_AMPL_ENABLED), (2: FD_AMPL_ERROR), (4: FD_AMPL_OVER_TEMP), (6: FD_OVER_CURRENT_PEAK), (7: FD_OVER_VOLTAGE), (8: FD_UNDER_VOLTAGE), (9: FD_SENSOR_FAULT), (10: FD_TIME_OVERLOAD_ERROR), (11: FD_TIME_OVERLOAD_WARNING),
4472	tsc_mcs_hk	fd_status_ampl_2	UINT2	N/A	%u	BIT	0	65535	Fine drive amplifier 2 status(0: FD_POWERED_UP), (1: FD_AMPL_ENABLED), (2: FD_AMPL_ERROR), (4: FD_AMPL_OVER_TEMP), (6: FD_OVER_CURRENT_PEAK), (7: FD_OVER_VOLTAGE), (8: FD_UNDER_VOLTAGE), (9: FD_SENSOR_FAULT), (10: FD_TIME_OVERLOAD_ERROR), (11: FD_TIME_OVERLOAD_WARNING),
4473	tsc_mcs_hk	fd_status_ampl_3	UINT2	N/A	%u	BIT	0	65535	Fine drive amplifier 3 status(0: FD_POWERED_UP), (1: FD_AMPL_ENABLED), (2: FD_AMPL_ERROR), (4: FD_AMPL_OVER_TEMP), (6: FD_OVER_CURRENT_PEAK), (7: FD_OVER_VOLTAGE), (8: FD_UNDER_VOLTAGE), (9: FD_SENSOR_FAULT), (10: FD_TIME_OVERLOAD_ERROR), (11: FD_TIME_OVERLOAD_WARNING),
4474	tsc_mcs_hk	fd_status_ampl_4	UINT2	N/A	%u	BIT	0	65535	Fine drive amplifier 4 status(0: FD_POWERED_UP), (1: FD_AMPL_ENABLED), (2: FD_AMPL_ERROR), (4: FD_AMPL_OVER_TEMP), (6: FD_OVER_CURRENT_PEAK), (7: FD_OVER_VOLTAGE), (8: FD_UNDER_VOLTAGE), (9: FD_SENSOR_FAULT), (10: FD_TIME_OVERLOAD_ERROR), (11: FD_TIME_OVERLOAD_WARNING),

	A	B	C	D	E	F	G	H	I
4475	tsc_mcs_hk	fd_status_ampl_5	UINT2	N/A	%u	BIT	0	65535	Fine drive amplifier 5 status(0: FD_POWERED_UP), (1: FD_AMPL_ENABLED), (2: FD_AMPL_ERROR), (4: FD_AMPL_OVER_TEMP), (6: FD_OVER_CURRENT_PEAK), (7: FD_OVER_VOLTAGE), (8: FD_UNDER_VOLTAGE), (9: FD_SENSOR_FAULT), (10: FD_TIME_OVERLOAD_ERROR), (11: FD_TIME_OVERLOAD_WARNING),
4476	tsc_mcs_hk	fd_status_ampl_6	UINT2	N/A	%u	BIT	0	65535	Fine drive amplifier 6 status(0: FD_POWERED_UP), (1: FD_AMPL_ENABLED), (2: FD_AMPL_ERROR), (4: FD_AMPL_OVER_TEMP), (6: FD_OVER_CURRENT_PEAK), (7: FD_OVER_VOLTAGE), (8: FD_UNDER_VOLTAGE), (9: FD_SENSOR_FAULT), (10: FD_TIME_OVERLOAD_ERROR), (11: FD_TIME_OVERLOAD_WARNING),
4477	tsc_mcs_hk	fd_q_att_des	UQUAT32	N/A	%lf	NUMBER	-1	1	Quaternion defining desired attitude for fine drive (local or inertial) control (meaning of quaternion depends on current TASCU mode: Local Stabilization mode = ICRF->TARF, Inertial Stabilization mode = IRF->TARF)
4478	tsc_mcs_hk	fd_q_att_cmd	UQUAT32	N/A	%lf	NUMBER	-1	1	Quaternion defining commanded attitude for fine drive (local or inertial) control (meaning of quaternion depends on current TASCU mode: Local Stabilization mode = ICRF->TARF, Inertial Stabilization mode = IRF->TARF)
4479	tsc_mcs_hk	fd_u_torque_ampl	FLOAT4	newton meters	%lf	NUMBER	-490	490	Actual fine drive torque output for axis u
4480	tsc_mcs_hk	fd_v_torque_ampl	FLOAT4	newton meters	%lf	NUMBER	-860	860	Actual fine drive torque output for axis v
4481	tsc_mcs_hk	fd_w_torque_ampl	FLOAT4	newton meters	%lf	NUMBER	-920	920	Actual fine drive torque output for axis w
4482	tsc_mcs_hk	rdacu_status	UINT1	N/A	%u	ENUM	1	3	Status of rotational drive assembly control unit(1: RDACU_FD_DISABLED), (2: RDACU_FD_UNDER_TSC_CONTROL), (3: RDACU_FD_UNDER_RDACU_CONTROL),
4483	tsc_mcs_hk	rdacu_errors	UINT4	N/A	%u	BIT	0	4294967295	Error condition for rotational drive assembly control unit(0: RDACU_POS_LIMIT_ERR), (1: RDACU_VEL_LIMIT_ERR), (2: RDACU_SPS_EL_STEP_ERR), (3: RDACU_SPS_XEL_STEP_ERR), (4: RDACU_SPS_LOS_STEP_ERR), (5: RDACU_SPS_EL_OUT_OF_RANGE), (6: RDACU_SPS_XEL_OUT_OF_RANGE), (7: RDACU_SPS_LOS_OUT_OF_RANGE), (8: RDACU_SPS_EL_COM_ERR), (9: RDACU_SPS_XEL_COM_ERR), (10: RDACU_SPS_LOS_COM_ERR),
4484	tsc_mcs_hk	rdacu_rate_el	FLOAT4	radians per second	%lf	NUMBER	-0.0279	0.0279	Actual fine drive local rate along the elevation axis
4485	tsc_mcs_hk	rdacu_rate_xel	FLOAT4	radians per second	%lf	NUMBER	-0.0174	0.0174	Actual fine drive local rate along the cross elevation axis
4486	tsc_mcs_hk	rdacu_rate_los	FLOAT4	radians per second	%lf	NUMBER	-0.0174	0.0174	Actual fine drive local rate along the line of sight axis
4487	tsc_mcs_hk	rdacu_q_att	UQUAT32	N/A	%lf	NUMBER	-1	1	Quaternion defining actual attitude for fine drive local control (ICRF->TARF)

	A	B	C	D	E	F	G	H	I
4488	tsc_mcs_hk	atc_status	UINT1	N/A	%u	ENUM	30	34	Status of gyro drift estimator and target trajectory estimator algorithms (Limit/Range still TBD)(30: ATC_EST_OFF), (31: ATC_EST_DRIFT_TRANSIENT), (32: ATC_EST_DRIFT_STABLE), (33: ATC_EST_TRAJ_TRANSIENT), (34: ATC_EST_TRAJ_STABLE),
4489	tsc_mcs_hk	atc_errors	UINT4	N/A	%u	BIT	0	4294967295	Error condition detected by attitude controller (Limit/Range still TBD)
4490	tsc_mcs_hk	atc_warnings	UINT4	N/A	%u	BIT	0	4294967295	Warning condition detected by attitude controller(0: ATC_NO_MSG_RECEIVED), (1: ATC_NO_MSG_SENT), (2: ATC_ALGO_FAULT), (3: ATC_CONFIG_DATA_DEFAULT), (4: ATC_CMD_WRONG), (9: ATC_DPIO32_FAULT), (10: ATC_PMC663_FAULT), (11: ATC_TP861_FAULT), (12: ATC_EST_BUF_FAULT), (16: ATC_GYRO_FAULT), (17: ATC_GYRO_OUT_OF_RANGE), (18: ATC_GYRO_COMM_FAULT), (19: ATC_GYRO_UNIT_FAULT), (30: ATC_CONFIG_ERROR), (31: ATC_DRIVER_FAULT),
4491	tsc_mcs_hk	atc_rate_el	FLOAT8	radians per second	%lf	NUMBER	-0.0174	0.0174	Fine drive actual inertial rate along the elevation axis (after FBC has been applied)
4492	tsc_mcs_hk	atc_rate_xel	FLOAT8	radians per second	%lf	NUMBER	-0.0174	0.0174	Fine drive actual inertial rate along the cross elevation axis (after FBC has been applied)
4493	tsc_mcs_hk	atc_rate_los	FLOAT8	radians per second	%lf	NUMBER	-0.0174	0.0174	Fine drive actual inertial rate along the line of sight axis (after FBC has been applied)
4494	tsc_mcs_hk	atc_q_att	UQUAT32	N/A	%lf	NUMBER	-1	1	Quaternion (IRF->TARF) defining actual attitude for fine drive inertial control (after FBC has been applied)
4495	tsc_mcs_hk	atc_traj_offset_el	FLOAT8	radians	%lf	NUMBER	TBD	TBD	Actual estimated trajectory offset along the elevation axis
4496	tsc_mcs_hk	atc_traj_offset_xel	FLOAT8	radians	%lf	NUMBER	TBD	TBD	Actual estimated trajectory offset along the cross elevation axis
4497	tsc_mcs_hk	fbc_status	UINT1	N/A	%u	ENUM	1	4	Status of flexible body compensation algorithm (Limit/Range still TBD)(1: FBC_OFF), (2: FBC_QS), (3: FBC_DY), (4: FBC_ON),
4498	tsc_mcs_hk	fbc_errors	UINT4	N/A	%u	BIT	0	4294967295	Error condition detected by flexible body compensation (Limit/Range still TBD)
4499	tsc_mcs_hk	fbc_warnings	UINT4	N/A	%u	BIT	0	4294967295	Warning condition detected by flexible body compensation(0: FBC_NO_MSG_RECEIVED), (1: FBC_NO_MSG_SENT), (2: FBC_ALGO_FAULT), (3: FBC_CONFIG_DATA_DEFAULT), (4: FBC_CMD_WRONG), (5: FBC_TP_501_FAULT), (7: FBC_ICS_110B_FAULT), (30: FBC_CONFIG_ERR), (31: FBC_DRIVER_FAULT),
4500	tsc_mcs_hk	fbc_acc_el	FLOAT4	meters per square second	%lf	NUMBER	-20	20	Fine drive actual inertial acceleration (after FBC has been applied) in the elevation axis
4501	tsc_mcs_hk	fbc_acc_xel	FLOAT4	meters per square second	%lf	NUMBER	-20	20	Fine drive actual inertial acceleration (after FBC has been applied) in the cross elevation axis
4502	tsc_mcs_hk	fbc_acc_los	FLOAT4	meters per square second	%lf	NUMBER	-20	20	Fine drive actual inertial acceleration (after FBC has been applied) in the line of sight axis

	A	B	C	D	E	F	G	H	I
4503	tsc_mcs_hk	fbc_corr_dy_el	FLOAT4	radians	%lf	NUMBER	-1	1	Flexible body compensation correction sent to the SMA for the elevation axis
4504	tsc_mcs_hk	fbc_corr_dy_xel	FLOAT4	radians	%lf	NUMBER	-1	1	Flexible body compensation correction sent to the SMA for the cross elevation axis
4505	tsc_mcs_hk	fbc_q_gyrf	UQUAT32	N/A	%lf	NUMBER	-1	1	Quasi-static flexible body compensation correction quaternion for the gyros (GYRF->TARF)
4506	tsc_mcs_hk	fbc_q_wfimrf	UQUAT32	N/A	%lf	NUMBER	-1	1	Actual attitude of the WFI mounting flange with regard to TARF in quaternion representation (WFIMRF->TARF)
4507	tsc_mcs_hk	fbc_q_ffimrf	UQUAT32	N/A	%lf	NUMBER	-1	1	Actual attitude of the FFI mounting flange with regard to TARF in quaternion representation (FFIMRF->TARF)
4508	tsc_mcs_hk	fbc_q_fpimrf	UQUAT32	N/A	%lf	NUMBER	-1	1	Actual attitude of the FPI mounting flange with regard to TARF in quaternion representation (FPIMRF->TARF)
4509	tsc_mcs_hk	fbc_q_simrf	UQUAT32	N/A	%lf	NUMBER	-1	1	Actual attitude of the SI mounting flange with regard to TARF in quaternion representation (SIMRF->TARF)
4510	tsc_mcs_hk	tsc_q_att	UQUAT32	N/A	%lf	NUMBER	-1	1	Quaternion defining actual attitude of TARF with regard to the aircraft system bulkhead (ABRF->TARF)
4511	**ta_wfi** **Wide Field Imager (WFI) data**								
4512	**HK NAME**	**Name**	**Rep**	**Units**	**Format**	**Form**	**lo_lim**	**hi_lim**	**Description**
4513	rcs_id		STRING	N/A	%s	NUMBER			Version information for the XML file that defines this data source
4514	archive_info								Archive Info
4515	archive_info	archive_status	BOOL4	N/A	%s	ENUM	0	1	(0: false), (1: true),
4516	archive_info	current_bytes_archived	FLOAT8	N/A	%1f	NUMBER	0		Total bytes written to the current ark file
4517	archive_info	total_bytes_archived	FLOAT8	N/A	%1f	NUMBER	0		Total bytes written since this data source starts
4518	archive_info	archive_file_name	STRING	N/A	%s	NUMBER			Archive file name
4519	archive_nsamples								Archive nth sample for data groups, the part before the _nsample must match the data group node name
4520	archive_nsamples	current_bytes_archived_nsample	INT4	N/A	%d	NUMBER	0		
4521	archive_nsamples	total_bytes_archived_nsample	INT4	N/A	%d	NUMBER	0		
4522	commands		STRING	N/A	%s	NUMBER			Contains the last SCL command sent to the ta_wfi commandable
4523	responses								Contains SCL responses for TA WFI commands
4524	responses	debug	STRING	N/A	%s	NUMBER			Last SCL response sent back to the issuer of the debug command
4525	responses	show_test_images	STRING	N/A	%s	NUMBER			Last SCL response sent back to the issuer of the show_test_images command
4526	responses	retransmit_packets	STRING	N/A	%s	NUMBER			Last SCL response sent back to the issuer of the retransmit_packets command
4527	responses	scaling_range	STRING	N/A	%s	NUMBER			Last SCL response sent back to the issuer of the scaling_range command
4528	responses	log	STRING	N/A	%s	NUMBER			Last SCL response sent back to the issuer of the log command
4529	responses	image_to_hk	STRING	N/A	%s	NUMBER			Last SCL response sent back to the issuer of the image_to_hk command
4530	ta_wfi_alert								Alerts produced by the TA Wide Field Imager
4531	ta_wfi_alert	ta_wfi_alert_info	STRING	N/A	%s	NUMBER			Information alert
4532	ta_wfi_alert	ta_wfi_alert_warning	STRING	N/A	%s	NUMBER			Warning alert
4533	ta_wfi_alert	ta_wfi_alert_error	STRING	N/A	%s	NUMBER			Error alert

	A	B	C	D	E	F	G	H	I
4534	ta_wfi_alert	ta_wfi_alert_fatal	STRING	N/A	%s	NUMBER			Fatal alert
4535	ta_wfi_alarm								Alarms produced by the TA Wide Field Imager
4536	ta_wfi_alarm	ta_wfi_alarm_info	STRING	N/A	%s	NUMBER			Information alarm
4537	ta_wfi_alarm	ta_wfi_alarm_warning	STRING	N/A	%s	NUMBER			Warning alarm
4538	ta_wfi_alarm	ta_wfi_alarm_error	STRING	N/A	%s	NUMBER			Error alarm
4539	ta_wfi_alarm	ta_wfi_alarm_fatal	STRING	N/A	%s	NUMBER			Fatal alarm
4540	ccd_image_data								Imager housekeeping data
4541	ccd_image_data	packet	BINARY	N/A	%s	NUMBER	N/A	N/A	data packet as it was received from the TA
4542	ccd_image_data	pkt_timestamp	TIME8	seconds	%d.%09d	NUMBER	0	2147483647	time data packet was constructed by TA
4543	ccd_image_data	image_type	INT4	N/A	%d	ENUM	0	3	Indicates whether the data block is a CCD image, a darkfield image or a flatfield image(0: CCD_IMAGE), (1: FLATFIELD), (2: DARKFIELD), (3: TEST),
4544	ccd_image_data	image_sn	INT4	N/A	%d	NUMBER	10000	39999	Unique identity of the image, with ranges as follows: WFI: 10000...19999, FFI: 20000...29999, FPI: 30000...39999
4545	ccd_image_data	image_use	INT4	N/A	%d	ENUM	1	4	Reports how the image is used(1: MONITOR), (2: NORMAL), (3: DARK_ACQUISITION), (4: TEST),
4546	ccd_image_data	image_size_transfer	INT4	N/A	%d	NUMBER	0	2147483647	Image size (in Bytes) of current image
4547	ccd_image_data	exposure_start_time	TIME8	seconds	%d.%09d	NUMBER	0	2147483647	Start time of exposure
4548	ccd_image_data	exposure_duration	INT4	milliseconds	%d	NUMBER	10	10000	Duration of exposure period
4549	ccd_image_data	pixel_grouping	INT4	N/A	%d	ENUM	0	2	Pixel grouping of the current image(0: 1x1), (1: 2x2), (2: 4x4),
4550	ccd_image_data	pixel_format	INT4	N/A	%d	ENUM	0	1	Pixel format of current image(0: 8_BIT), (1: 14_BIT),
4551	ccd_image_data	filter_position	INT4	N/A	%d	ENUM	-1	6	Filter position(-1: UNDEFINED), (0: HOME), (1: CLOSED), (2: FILTER_1), (3: FILTER_2), (4: FILTER_3), (5: FILTER_4), (6: FILTER_5),
4552	ccd_image_data	focus_position	FLOAT4	millimeters	%f	NUMBER	0	600	Focus position. Only valid for FPI.
4553	ccd_image_data	focal_length	FLOAT4	millimeters	%f	NUMBER	100	100000	Focal length of camera optics
4554	ccd_image_data	reticle	FLOAT4	N/A	%f	NUMBER	0	1	Reticle brightness. Only valid for FPI.
4555	ccd_image_data	pixel_n	BINARY	N/A	%u	NUMBER	N/A	N/A	Image pixel data. Each pixel is two bytes in size, so if the pixel_format is defined to be 14 bit, the two high bits (14 and 15) are always 0, whereas if the pixel_format is defined to be 8 bit, the high byte is filled with 0s. Also, for any given data packet, there are n pixels, i.e., the image size (see image_size_transfer) may vary with every packet.
4556	fits_data								Imager housekeeping data in the FITS format
4557	fits_data	fits	BINARY	N/A	%s	NUMBER	N/A	N/A	Contains the FITS image data (ASCII header followed by the image data in binary)

APPENDIX C. TA IMAGE PROCESSING SUBSYSTEM

1.0 Background and Scope

The TA Imager Processing Subsystem (TAIPS) is a subset of the MCCS Video Distribution Subsystem (VDS). It general function is to interface with the SOFIA TA Tracker to collect the Wide Field Imager (WFI), Fine Field Imager (FFI), and Focal Plane Imager (FPI) images. It streams these images as raw binary data to various workstations and PI Patch Panel. The delivery method of the data is UDP packets in multicast mode via the Video LAN. The raw data may then be further processed and/or displayed by the receiving systems. The TAIPS is a VME based system that runs under the VxWorks Real Time Operating System. It consists of three dual processor Single Board Computers (SBCs) in a rugged chassis. Figure C-1 shows the TAIPS external interfaces in Early Science.

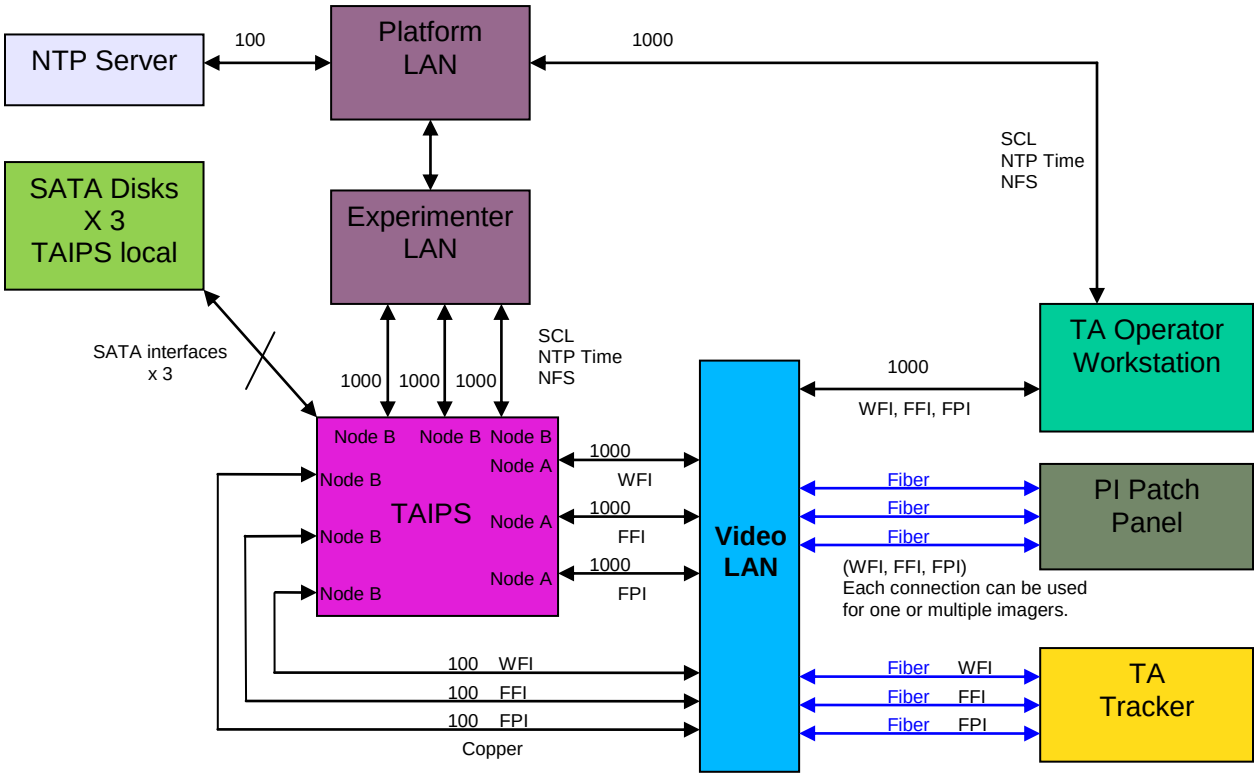

Figure C-1. TAIPS Interfaces (Early Science Configuration)

TAIPS provides three products for users.

1) Real-time WFI, FFI and FPI images broadcast over the Video LAN. See Section 2.1 for details.

2) Logging of individual images or sequences of images from WFI, FFI and FPI when commanded via SCL. The logged image files are available in-flight as they are acquired. See Section 2.2.
3) An archive of all images acquired in-flight. This data is available post-flight in the data archives maintained by the science project. See Section 2.3 and Appendix C-1 for further information.

2.0 General Functions

- The TAIPS interfaces to the TA Tracker to receive imager data from the TA Tracker's imagers (WFI, FFI and FPI) via TCP/IP communication per the TA_MCCS_F.
- For Early Science the data rate is limited to 2 MB/s maximum per imager (corresponding to 1Hz for 1024 x 1024 resolution setting).
- All data communication is via network connections as depicted in Figure C-1.
- The TAIPS timestamps each housekeeping message or data group that it receives from the TA Tracker.
- The TAIPS provides all TA Tracker housekeeping data specified in section 30.6 of Appendix C of the TA_MCCS_F ICD as MCCS housekeeping data except the "pixel_n" item (which is the image itself).
- The TAIPS provides the status/state of the TCP/IP connection between the TA and the TAIPS as MCCS housekeeping data.

2.1 Streaming Image Data

- The TAIPS streams the received raw data of the WFI, FFI and FPI to UDP multicast addresses on the Video LAN in the exact format that it receives it. The structure of the raw data packets received from the TA imagers is described in detail in the TA_MCCS_F ICD, Appendix B and section 30.6 of Appendix C.
- There is one IP address for each multicast group.
- The TAIPS uses the UDP packet size, delay between packets, multicast address, and port number specified in the table below for the specified imager streams.

	WFI	FFI	FPI
Packet size	8192	8192	8192
Multicast address	230.5.6.7	230.5.6.9	230.5.6.8
Port Number	8234	8236	8235

2.2 Image Logging

- The TAIPS saves the next single image frame or series of frames to an NFS disk upon receiving a "ta_wfi.log", "ta_ffi.log" or "ta_fpi.log" SCL command. The SCL command specifies the format of the saved file as either "FITS" or "Binary".

- The TAIPS only timestamps a single image frame or series of frames in a saved file if it is in FITS format.
- For image capture files, the user specifies the filename in the SCL log command. When a series of images is requested, an incrementing number is appended to the filename.

The following sample FITS header shows keywords provided by MCCS in TAIPS image files logged in FITS format.

```
SIMPLE  =                    T / standard conforming (constant T)
BITPIX  =                   16 / bits per pixel (constant 16 for current imagers)
NAXIS   =                    2 / number of axes
NAXIS1  =                 1024 / image width
NAXIS2  =                 1024 / image height
ORIGIN  = 'SOFIA'              / Stratospheric Observatory for Infrared Astronomy
DATE    = '2009-07-22T08:02:49.635' / When user requested image
HISTORY   Created by the SOFIA Mission Control System software
DATASRC = 'ASTRO'              / data source ('TEST' for test data, 'ASTRO' for real)
CREATOR = 'sessiond'           / MCCS session daemon
FILENAME= 'ta_operator_ws_1.wfi_image.1.fits' / file name (excludes path)
OBSERVAT= 'SOFIA'              / Stratospheric Observatory for Infrared Astronomy
TELESCOP= 'SOFIA'              / 2.5 meter telescope
IMAGTYP = 'CCD_IMAGE'          / image type ('CCD_IMAGE', 'DARKFIELD' or 'FLATFIELD')
INSTRUME= 'FPI'                / 'FPI', 'FFI' or 'WFI'
DATE-OBS= '2009-07-22'         / date of exposure start
UTCSTART= '08:02:50.125'       / UTC of exposure start
UTCEND  = '08:02:51.325'       / UTC of exposure finish
EXPTIME =                1.200 / seconds
BINNING = '1x1'                / pixel grouping (='1x1', '2x2' or '4x4')
PIXBITS =                   14 / ADC bits (=8 or 14)
DATAMAX =                16383 / detector full well maximum (=2^PIXBITS - 1)
DATAMIN =                    0 / smallest value from detector
IMAGE_SN=                30218 / unique image identifier (WFI: 10000..19999, FFI:
                                 20000...29999,FPI: 30000...39999)
IMAGUSE = 'NORMAL'             / how image is used ('NORMAL', 'MONITOR',
                                 'DARK_ACQUISITION', 'TEST')
FILTPOS = 'FILTER_2'           / filter position (='UNDEFINED', 'HOME', 'CLOSED',
                                 'FILTER_1', 'FILTER_2', 'FILTER_3', 'FILTER_4' or
                                 'FILTER_5')
FOCLEN  = 21528.3              / focal length of camera optics in mm (100 to 100000)
KWDICT  = 'V1.4alpha'          / conforms with DCS keyword dictionary version
FPIFOCUS=               326.42 / focus position in mm (0 to 600) - only valid for FPI
FPIRETCL=                   -1 / reticle brightness (0.0 to 1.0, or -1 if undefined) -
                                 only valid for FPI
TELRA   = '05:35:28.0'         / RA of center of image (always J2000)
TELDEC  = '-05:26:20'          / declination of center of image (always J2000)
TELROF  =               128.21 / ROF of this image (clockwise from up to north)
END
```

2.3 Image Archival

- The TAIPS archives all raw imager data continuously as it is received to the TAIPS local hard disk drives for post flight purposes.
- Multiple archive files will be generated, each with a maximum size of 50 Mbytes. (This size is set in the TAIPS configuration XML file.)
- The TAIPS timestamps the archived data.
- Archive data format is defined in Appendix C-1.

3.0 Workstations, Science Instrument (SI) and Other Interfaces

- Workstations and SI applications may receive streaming raw imager data by joining the multicast groups specified in the table in section 2.1 for the WFI, FFI, and FPI via their socket communication software.
- Workstations and SI applications are responsible for receiving, processing and displaying imager data from the TAIPS as desired since TAIPS does not provide these functions.
- The physical interface for SI computers to the TAIPS for raw imager data is the PI Patch Panel and the Video LAN.
- There is a gigabit Ethernet connection from the Video LAN to the Telescope Operator and Mission Director Workstations. Images from all three imagers are available over this connection.
- There will be three gigabit Ethernet connections from the Video LAN switch to the PI Patch Panel. The use of each connection is at the user's discretion.

APPENDIX C-1 TAIPS ARCHIVE FORMAT DEFINITION

1. Overview

This appendix specifies the format of the MCCS archive files created by the TAIPS to save TA imager data. Each image and associated data is written to the data source's archive file as a binary data record. The record format is identical to the format that the data is received from the TA, which is defined in the TA_MCCS_F ICD, and also defined by a XML data definition file stored at the front of each archive file.

2. File Naming Conventions

File name is <hostname>.<subsystem>.<timestamp>.ark, where:

<hostname> name of host computer where the subsystem is running that created the archive file.

<subsystem> name of subsystem that created the archive file. This is the same as name in the <subsystem>_data.xml file.

<timestamp> when the archive file is first created, is has the format of yymmddhhmmss.

The naming convention was established for potential use in archiving data from all MCCS data sources. Therefore MCCS names its files consistently with the data naming defined for SCL commands, and requires that this consistency be maintained in order for the software and automated documentation tools to work. This naming convention extends to the archive file names which map one-to-one with the XML data definition file names. For example, the Flight Management System (FMS) is an MCCS data source with a base data tree name of "fms". Its XML data definition file is named fms_data.xml, and its archive file name will be hostname.fms.timestamp.ark (all archive files will have the host machine where they were generated prepended on to the file name. This is necessary since a given data source may run on multiple machines. Note that a given machine will not have more than one data source with the same base name running on it). This works the same for any subsystem that the MCCS expects data from, including MCCS internal sources (e.g. Coordinate Transforms). You just need to know the base name for that source/subsystem and all the associated file names are built based on that. Most of these "static" names are defined in the MCCS_SI_04, the MCCS to Science Instrument Interface definition, since those same names are used within the SOFIA Command Language (SCL) to give command line users access to MCCS data. Note that for user (session) sources, the base name for the source is dynamically determined, so the name of the archive file is not known initially. The base name of a user source is determined when the user logs in to the system. The naming convention for user sources is "session_user_role_id", (e.g., "session_mcs_co_1"), where "user" and "role" correspond to the user and role specified in the login command, while id is a running count of the number of user sessions created on a given machine. All session archive files have the same XML data definition, which is defined in session_data.xml.

3. Life Cycle of the Archive file

Before a flight, the TAIPS disks are cleared of previous data to assure adequate space to store data from the upcoming flight. Subsequently, TAIPS writes all imager data it receives into its archive files on its local TAIPS disks. When a file is closed due to either reaching a configurable max size (default is 50 Mbytes), or by a user command “stop_archive”, or when the subsystem shuts down, the ending time is added to the end the archive file.

Following the flight, ground support staff copy the flight’s TAIPS data over the aircraft network to a removable system such as a laptop computer, transfer the data to ground-based disks, and send the data (via network or shipped on physical media) to Ames where it is archived for later access by staff and users.

4. Data Structures and Definitions

A data source has an XML definition of the data structure that the associated MCCS data handling process (proxy) uses to create its part of the data tree and to populate and distribute the data for each data update. Each data source maps to one subsystem and has only one XML data definition file. That XML definition is a pre-defined tree structure containing four types of nodes that are of primary interest to the archive: DataNodes, ArrayNodes, Values, and AlertValues. Other informational tags may be specified in the XML definition (such as "help" tags, FieldValues, and AlertItems), but these tags do not represent nodes in the MCCS data tree. Here is a basic breakdown of the rules for how the four nodes mentioned above may be organized in the MCCS tree structure:

- DataNodes – Any of the four node types may be a child of a DataNode. The top-level node for a data source will always be a DataNode (which means the top-level node in the XML definition will always be a DataNode). DataNodes will not be nested within DataNodes more than three deep (i.e., a given DataNode may only have children, grandchildren, and great-grandchildren DataNodes). DataNodes do not represent an actual data value.
- ArrayNodes – DataNodes, Values, and AlertValues may all be children of an ArrayNode.

ArrayNodes cannot be descended from ArrayNodes at any level (i.e., an ArrayNode cannot be nested within an ArrayNode, whether it is as a child, grandchild, etc.). Also, an ArrayNode may only contain one DataNode as an immediate child. ArrayNodes do not represent an actual data value.

- Values – Of the four node types, only Values may be children of Values. However, a given Value node may only have one Value node as a child, and that child will not have any children of its own. Value nodes represent actual data values in the data tree. Values may also have FieldValues as children, which may or may not be of any interest to the archive. FieldValues represent enumerations or bit mappings that are associated with the Value node’s data value (e.g., a value of 5 may represent the string "CMD_EXECUTED").

- AlertValues – Of the four node types, only Values may be children of AlertValues. However, a given AlertValue node may only have one Value node as a child, and that child will not have any children of its own. Similar to Value nodes, AlertValues represent actual data values in the data tree. However, these data values are different in that they represent alert/alarm messages, which have their own unique format (see the MCCS-SI04 for the format of an alert/alarm string). AlertValues may also have AlertItems as children, which are probably not of any interest to the archive. AlertItems are used by the MCCS to define persistent alerts/alarms.

  Data is updated as data groups (dataGroup), which are defined as the set of data items that are coincidentally/simultaneously received (and time-stamped) from a source. Data groups are marked in the XML definition by setting the dataGroup attribute to "true" for a given node. A given data source can have one or more data groups. If the dataGroup attribute is not specified for a given node, it is defaulted to a value of "false". Since a dataGroup can be defined ("true") at any level within the tree, the data group may be an entire tree structure of its own or only a single node, depending on how the data set is received from the source. Note that data groups may not be nested within data groups; once dataGroup="true" has been defined for a given node in the tree, none of its descendents (children, grandchildren, etc.) may have dataGroup="true" defined for them. If dataGroup="true" is specified for a given node, it will always contain a child Value node that is defined to be the MCCS timestamp ("mcstime") for the data group. This "mcstime" node indicates when the MCCS received the data group. It will have an attribute defined in it called "attribute", which will be set to the value "yes". This is meant to indicate that the Value node provides extra information about the parent node, and that its contents apply to all children of the parent. Please also note that the "mcstime" node will never have any children of its own.

  The data group attribute may only be associated with the four primary node types listed above (DataNodes, ArrayNodes, Values, and AlertValues). Data groups are related to the four primary node types as follows:

- DataNodes – DataNodes may or may not be specified as a data group. When a DataNode is designated as a data group, then its children, and possibly its grandchildren, will contain the data items for the data group. In most cases, however, all the data items in the data group will be children of the DataNode.
- ArrayNodes – ArrayNodes are always specified as a data group. Its children, grandchildren, and possibly its great-grandchildren will contain the data items for the data group. In most cases, however, all the data items in the data group will either be children or grandchildren of the ArrayNode.

- Values – Values may or may not be specified as a data group. When a Value is designated as a data group, the Value node itself as well as its children nodes will contain the data items for the data group.
- AlertValues – AlertValues may or may not be specified as a data group. When an AlertValue is designated as a data group, the AlertValue node itself as well as its children nodes will contain the data items for the data group.
- Please note that the actual data items in a data group will always either be Value or AlertValue nodes. The data definition is not repeated in the archive files themselves, so the "unpacking" software will need to utilize the same definition files (XML) used by the MCCS data distribution and archiving function to understand the structure of the data written to the MCCS archive. The primary data definition parameters (XML tags/attributes) needed to derive the structure are listed below.
- DataNode, ArrayNode, Value, and AlertValue tags
- The dataGroup attribute
- Value name
- Value sizes and types

Any archive retrieval software should be able to use these tags and attributes and their sequence and nesting given in the XML file to determine the complete structure for the given data source. Here are two examples of XML structure for data definitions that correspond to a portion of the data from the FORCAST science instrument and TA TASCU data sources.

The sample below (from forcast_data.xml) is for the FORCAST science instrument in a section of the definition where every value is its own dataGroup because the MCCS receives each data item individually.

```
<DataNode name="forcast" label="FORCAST Science Instrument"
      description="Initial XML Instrument Mode Description File"
      rcs_id="$Id: forcast_data.xml,v 1.3 2009/08/11 12:13:31 corteze Exp $"
    .
    .
    .
   <Value name="x_sep_si" rep="FLOAT8" initial="50.0" units="microns"
          label="SI X pixel separation" description="SI x-axis pixel separation"
          dataGroup="true" format="%lf">
       <Value name="mcstime" rep="FLOAT8" units="seconds" label="MCS Timestamp"
             format="%lf" attribute="yes"
             description="Time the data arrived at MCS (seconds since 1970)"/>
    </Value>
    <Value name="y_sep_si" rep="FLOAT8" units="microns" initial="50.0"
          label="SI Y pixel separation" description="SI y-axis pixel separation"
          dataGroup="true" format="%lf">
       <Value name="mcstime" rep="FLOAT8" units="seconds" label="MCS Timestamp"
             format="%lf" attribute="yes"
             description="Time the data arrived at MCS (seconds since 1970)"/>
    </Value>
    .
    .
```

```
    .
</DataNode>
```

For the TA's TASCU subsystem (ta_tsc_data.xml) the entire block of data Values is one dataGroup sent to the MCCS in one tsc_cmd_ack message from the TASCU.

```
<DataNode
       name="ta_tsc"
       label="TA TASCU data"
       description="Data produced by the TASCU"
       distributor="true"
       dataGroup="false"
       rcs_id ="$Id: ta_tsc_data.xml,v 1.17 2001/11/19 17:32:48 sschlappe Exp $">
    <DataNode
           name = "tsc_cmd_ack"
           description = "generic acknowledgement to a TASCU command"
           msgID = "4001"
           msgVersion = "1"
           dataGroup = "true"
           developmentStatus = "B3"
           visibility = "PUBLIC">
       <help>
       <helptext>
              The TSC_CMD_ACK is sent from the TSC to the MCS indicating that a
              command was received, accepted, or contained a sequence count error.
       </helptext>
       </help>
       <Value
              name="mcstime"
              description="time MCS received data"
              units="seconds" rep="FLOAT8"
              attribute="yes"
              format="%lf" label="MCS Timestamp">
       </Value>
       <Value
              name="packet"
              description="data packet as it was received from the TA"
              units="" rep="BINARY"
              lolim="" hilim=""
              accuracy="" precision=""
              format="%s" label="PACKET"
              >
       </Value>
       .
       .
       .
    </DataNode>
</DataNode>
```

These two examples show some variants in "style" with the use of both <value ... /> and <value> ... </value> for the value tags. These and other variations in language usage are bound by the MCCS developer's XML style guide and enforced by their validation against DTDs and style sheets.

5. Archive records

The binary records for each archive file have a variable length with a fixed structure (sequence of elements), with the record element lengths or terminations given in the table

below.

Archive Header	Record #1	. . .	Record #n	Archive Ender

An Archive Header is defined as:

Archive component	Component element	Contents	Length	Terminator
Archive Header	Xml file size	Size of the entire XML file (bytes)	4 bytes	no term
	Xml file	The XML file that defines the data in this archive file subsystem_data.xml	variable	no term

Each data record is defined as:

Archive component	Component element	Contents	Length	Terminator
Data Record Header	Sync Word	Sync Word Hex byte pattern 0x1FDFA7C9	4 bytes	no term
	Record size(bytes)	Size of the entire record (header w/sync word + data) (bytes)	4 bytes	no term
	Timestamp	When the record was written to the file(floating-point value denoting seconds since 1970)	8 bytes	no term
	Address	ASCII SCL syntax data group address, e.g., fms.latitude	variable	NULL ('\0')
Data Group Serialized (big endian)	Value #1	Value of first node in the data group	length of item #1 (**)	no term
	Value #2	Value of second node in the data group	length of item #2 (**)	no term
	. . .	. . .	. . .	. . .
	Value #N	Value of last node in the data group	length of item #N (**)	no term

An Archive Ender is defined as:

Archive component	Component element	Contents	Length	Terminator
Archive Ender	Sync Word	Sync Word Hex byte pattern 0x1FDFA7C9	4 bytes	no term
	Record size(bytes)	Size of the entire record (header w/sync word + data) (bytes)	4 bytes	no term
	Timestamp	When the file was closed(floating point value denoting seconds since 1970)	8 bytes	no term

(**) Variable length data types will include their length at the beginning of the Value element, adding 4 bytes to the element length.

An archive file is composed of 3 components, an archive header, any number of data records, and an archive ender.

An archive header consists of a 4 byte integer indicating the size the subsystem_data.xml following by the ASCII string that is the file contents. The xml file is included with each archive file so the data definition is always with the data that has been archived.

The data record part consists of 1 to many individual records. Each data record has two components, a data record header and the data component.

The data record header elements are purposefully not serialized so that the co-resident retrieval software can use its elements directly for filtering on extraction without the "overhead" of de-serialization. The first element of the header is a 4 byte long Sync Word element to allow the retrieval software to remain in synch and distinguish the breaks between records. After that is a Record Size element, which is the size of the entire record in bytes, including all the Header component elements. The Record Size element itself has a fixed length of 4 bytes. Next is the timestamp, which denotes when the data group was written to the archive file. The data component will also have the MCCS timestamp for the data group as one (usually the first) of the data elements. Finally, there is the address or data name, which completely specifies the path through the data tree to that data group, and uses the same syntax provided to the user by the SOFIA Command Language (SCL) to fetch that same data (get/subscribe) from the MCCS.

The data component is the list of new data values for that data group serialized in the exact same way as is done to distribute the data group around the MCCS. The retrieval software will need to use the XML definition for the data group to know how to de-serialize and unpack the individual data elements based on their ordering, type, and size. Elements of a data group will be written to the archive in the exact same order as they are specified in the XML definition file. The type and size of a given data element can be obtained from the "rep" attribute in its XML definition. If a data element is of a variable length type (STRING, BINARY), its first four bytes will be the data element length in bytes, followed by the value of the element. Note that if the size of a variable length type is 0, then there will be no value for that data element. The length of the fixed length types (UINT2, INT4, FLOAT8, etc.) can be determined from the value of the "rep" attribute, so the length of the data element is not included in the archive file. The end of the data component is not explicitly marked or terminated, but can be identified when the sync word for the next record is encountered.

Coincident with its distribution of a data update to the rest of the MCCS, any given MCCS data source handler, proxy in most cases, will do a single write of one record to the archive file for that data source with the record format appropriate for that data group. It is important to understand that even though the data in an individual record "obeys" the sequence of data items given in the XML data group definition, the records themselves can come (and should be assumed will come) in any order. A record is added to the archive when it arrives at the MCCS from a given data source, the sequence of which will depend on the data rates of all the data groups for that source or on how the given MCCS proxy retrieves that data relative to the other data from the source.

The archive ender component is technically an empty data record ending with a timestamp and no data. This is the time when the archive file is closed.

APPENDIX D. MISSION AUDIO DISTRIBUTION SUBSYSTEM

The Mission Audio Distribution Subsystem (MADS) provides onboard communication among flight participants. The first four MADS channels are used for most communications on the main deck and are recorded throughout flights.

The onboard audio recorder being used for Early Science operations has a 32 Gbyte capacity which is enough to save four channels for at least 14 hours. Audio recordings are timestamped with standard observatory time from the onboard IRIG-B time source.

Audio recordings are saved post-flight to the Science Project archive and are available for reference to SOFIA staff and users.

APPENDIX E. ERRATA

The following are known issues with this current version of the ICD. These will be addressed in future revisions.

Date Discovered	Errata Description	ICD Impact
06/10/2010	Need to add "0=NONE" enum to the rof_cmd_atc_des_mode data in the ta_trc_data.xml file	Appendix B -- HK Data
02/15/2011	TA commands show a NeedDate of CAE_INVALID, even though they are currently available. These should be updated to CAE_IMMEDIATE instead.	Appendix A -- Commands
02/15/2011	Some command arguments show a NeedDate of CAE_INVALID even though the command has a valid NeedDate. Unless specifically called out with a later NeedDate, these argument should have the same NeedDate as the command itself.	Appendix A -- Commands
02/16/2011	The parameters x_bin and y_bin need to be deleted from the RIEN HK Data List.	Appendix B -- HK Data
03/31/2011	XML updates for Basic Science not yet reflected in Appendices A, B, and ICD text	Front matter, Appendices A and B
04/06/2011	Units for HK parameters x_sep_si and y_sep_si in the RIEN table of Appendix B are shown in millimeters, but Section 3.3.2 refers to them in microns. For Early Science, the software only accepts these values in microns.	Appendix B -- HK Data
04/27/2011	Description of dither.remove command should say "Remove beam positions from a defined dither set."	Appendix A -- HK Data