INTERFACE CONTROL DOCUMENT

TA_SI_01_FL
Revision - 2

CABLE LOAD ALLEVIATOR DEVICE / SCIENCE INSTRUMENT CABLE INTERFACE
– FINAL –

STRATOSPHERIC OBSERVATORY FOR INFRARED ASTRONOMY
(SOFIA)

ORIGINAL ISSUE: NOVEMBER 2001
REVISION 2: APRIL 2004

Approved for Final:

/s/ A. Himmes 07.Nov.2001	/s/ C.B. Wiltsee 7 Nov 01
Alois Himmes / Date DLR SOFIA Project Manager	Chris Wiltsee / Date NASA SOFIA Project Manager

FINAL ICD REVISIONS

Revisions to this document from the previous issue are denoted by vertical bars in the margin of each page.

REV	DATE	DESCRIPTION	APPROVAL
0	12/17/01	Initial NASA SPO Release of MAN Final ICD TA_SI_01, Issue 6, Dated 29 October 2001. (SOF-ICD-MG-062)	/s/ J. Logan
1	3/4/03	Corrrected table of cable assignments and other associated entries, as described in SOF-DCR-0182. Revised high voltaage coax cable model number, as described in SOF-DCR-0190.	/s/ J. Logan
2	4/26/04	As described in SOF-DCR-0204: Deleted information for cables CD-102-G and CD-202-K, which were eliminated from the design of the TA Balancing System.	

SOFIA

MG-KT-MT

SOF - ICD - MG - 062

Issue No.: Final, Rev. 2
Issue Date: 26 April 2004

SOFIA
TELESCOPE ASSEMBLY

TA_SI_01 CABLE LOAD ALLEVIATOR DEVICE/ SCIENCE INSTRUMENT CABLE INTERFACE

	Function:	Name:	Signature:	Date:
	SE&I Manager USRA	J. Fitch	/s/ John E. Fitch	11/7/01
	Project Manager USRA	Tom F. Bonner, Jr.	/s/ Tom F. Bonner, Jr.	11/07/01
Prepared by:	WP-Manager	Gemünde, G.	/s/ G. Gemünde	10/30/01
Approved by:	System Engineer	Sust, E.	/s/ E. Sust	06.11.01
Released by:	Project Manager	Dreger, H.	/s/ H. Dreger	06.11.01
Released by:	TA Program Mgr.	Gazey, S..	/s/ S. Gazey	07.11.01

INTERNAL ACCEPTANCE LIST

Function	Name	Signatue / Date	Copies	Purpose		
				Approv.	Accept.	Inform.
FAA resp. MT-I	Bremers,E.		1			X
Proj.-Manag. MT	Stöffler, Dr. Günther		1		X	
Proj.-Manag. KT	Bittner, Dr. Hermann		1		X	

EXTERNAL ACCEPTANCE LIST

Function	Name	Signatue / Date	Copies	Purpose		
				Approv.	Accept.	Inform.
USRA	Fitch, John		1	X		
USRA Proj.Manag.	Bonner, Tom F.		1	X		
Proj.-Manag. DLR	Himmes, A.		1		X	
Proj.-Manag. NASA	Wiltsee, C.		1		X	

MAN DOCUMENT CHANGE RECORD TO REACH FINAL

Issue No.	Issue date	No. of pages	Pages changed, added, deleted	Description of Change
Draft	28.10.1997	55		
01 Baseline	26.06.1998	9	all changed	Revision Draft
01 Baseline	27.08.1998	11		Revision Draft
02 Baseline	14.12.98	11	7; 8; 10 changed	Revision Draft
03 Proposed for Baseline	15.05.2000	55	all	Revision
04 Baseline	14.12.2000	73	8; 14; 15; 16 and 21-55 changed, 56-73 added	Revision
04 Baseline	12.02.2001	66	7; 8; 9; 12; 14-17; 18; 19; 22-66; 67-73 deleted	Revision
05 Baseline	23.08.2001	67	5-6; 8-10; 14-18; 20-24;28-29 changed, 52; 63-65 added	Revision
06 Final	29.10.2001	67	5, 9, 31 changed	Revision

TABLE OF CONTENTS

1 ACRONYMS 5

2 SCOPE 5

3 DOCUMENTS 5

3.1 Applicable Documents 5

3.2 Reference Documents 5

4 INTERFACE REQUIREMENTS 6

4.1 Physical 7

4.1.1 Arrangement of the Cable Load Alleviator (CLA) 7

4.1.2 Cable Routing CLA / Flange Assembly 12

4.1.3 SI-Patch Panels and Connector Fixations 15

4.1.4 Types and Numbers of Cables and Lines 20

4.1.5 Location of Mounting Points 26

4.1.6 Dynamic Loads 28

4.2 Responsibilities 29

4.3 Environmental 29

4.4 Safety 29

5 SRM & QA 30

5.1 Quality Assurance 30

5.2 Safety 30

5.3 Verification 30

6 ANNEX 1 DATASHEETS OF CABLES, LINES AND CONNECTORS FOR SCIENCE INSTRUMENT 31

1 Acronyms

Acronyms used in this document are referenced in the SOFIA lexicon, PD-2009.

ID	Inner Diameter
OD	Outer Diameter
R_{min}	Minimum Bending Radius

2 Scope

This document describes the complete cables & lines arrangement of the Cable Load Alleviator (CLA) also the interface between the SI-cables & SI-lines and the TA Cable Load Alleviator device. Furthermore is in this document the interface to the aircraft defined.
In this document is defined the cable positions on the CLA running to the outer Cable Clamb on the Cable Tray (right side) and aircraft intercoastal (left side). The cable routing from this locations to the Disconnect Panels are described in ICD TA_MCCS_P (responsibility USRA).
The Junction Box (analogue interface SMA to SI) is not part of this interface. This will be handled in TA_SI_04.

This document is a reference document to TA_AS_03.

It describes:

- The fixation and strain relief of the cables;
- The routing from aircraft system (AS) along the TA;
- The types and numbers of cables and lines
- The relevant features of these cables
- The location of mounting points and loads.

3 Documents

3.1 Applicable Documents

AD 01	Statement of Work	DARA-WE2 Rev.3 - Dec.1999
AD 02	TA Requirements	NASA SOF 1011 Rev.6
AD 03	Interface Requirements	NASA SOF 1030 Rev.6
AD 04	EMC Design Specification	SOF-SPE-KT-6000.0.02, Issue 1

3.2 Reference Documents

RD 01	Interface Reference Document	PD-2003 (NASA)
RD 02	TA_AS_03 Aircraft System / TA-Cable Load Alleviator Device Interface	SOF-ICD-MG-059, Issue 06

RD 03	TA Cables	SOF-DWG-MG-5262.0.01, Issue R03
RD 04	delete	
RD 05	Cable Load Alleviator	SOF-DWG-MG-4400.0.00, Issue R07
RD 06	TA Harness / Electrical Interface	SOF-ICD-MG-010, Issue 07
RD 07	Harness Master Diagram	SOF-DWG-KT-6200.0.01, Issue 09
RD 08	CLA Fine Drive Cables and Lines	SOF-DWG-MG-4410.0.00, Issue --
RD 09	Oil Supply Specification	SOF-SPE-MG-3130.0.01, Issue 03
RD 10	Thermal Subassembly Specification	SOF-SPE-MG-3400.0.01, Issue 02
RD 11	TA EMC Control Plan	SOF-PLA-KT-6000.0.01, Issue 02
RD 12	TA Cable List	SOF-LIS-KT-6200.0.01, Issue 03
RD 13	Aircraft Cabin / Telescope Assembly Envelope	TA-AS-10, Rev.: 0
RD 14	Telescope to MCCS Physical Interface	TA-MCCS-P, Rev.: - dated 2001-03-28
RD 15	Global 05 SOFIA Coordinate System	

4 Interface Requirements

All the cables including Science Instrument (SI) cables, hoses and vacuum lines from AS routings run over the Cable Load Alleviator. The cables are routed over the CLA Coarse Drive and along the CLA Fine Drive.

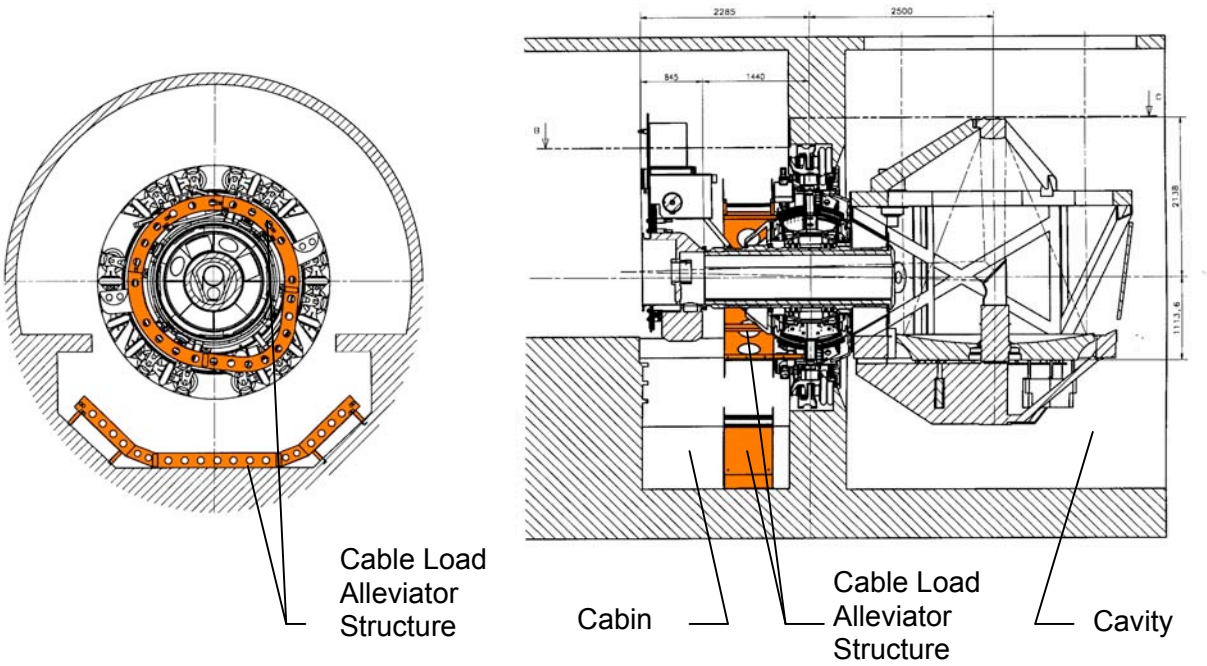

Figure 1: Cable Load Alleviator Location

4.1 Physical

4.1.1 Arrangement of the Cable Load Alleviator (CLA)

The arrangement of the Cable Load Alleviator device is shown in the documents RD 05 and RD 02.

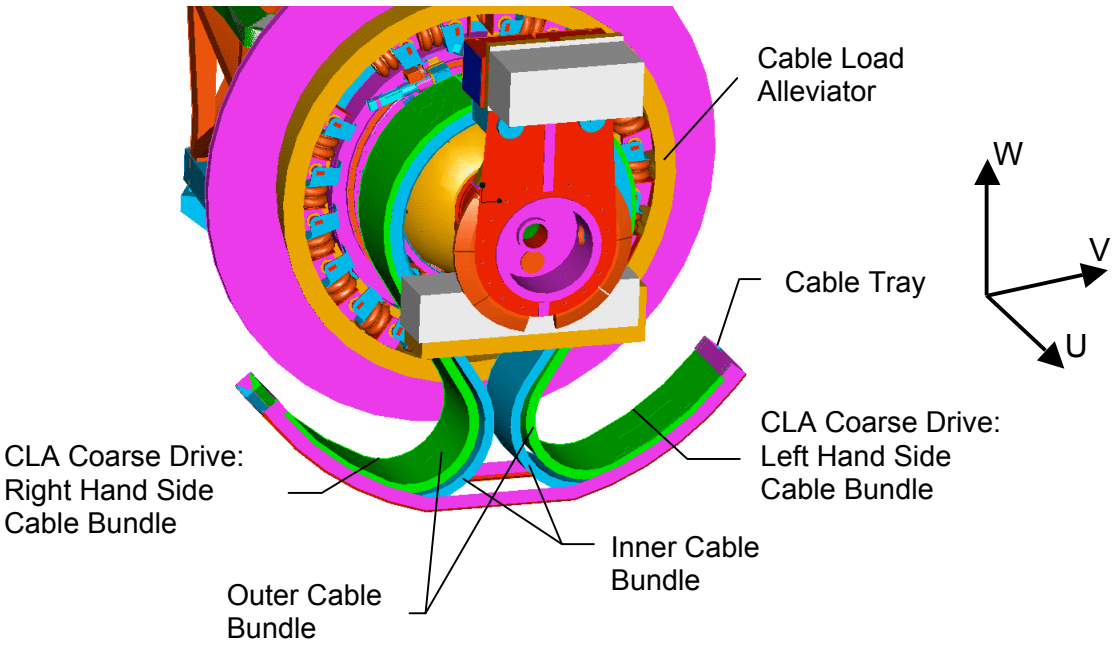

Figure 2: Cable Load Alleviator with Cable Bundles

A right hand and a left hand cable bundle runs free from the Cable Load Alleviator to the Cable Tray. The cable and line arrangement from the bundles are shown in the following Figure 3 and Figure 4.

The strain relievers on the Cable Tray have to be only disconnected on the left side completely to allow TA rotation to its 180°-maintenance position and <15° position (see RD 02 – Chapter 4.2.1 CLA Motion).

Loads on the strain relievers are presented in RD 02.
The dimensions of the alleviator are shown in the drawing SOF-DWG-MG-4400.0.00 (RD 05).

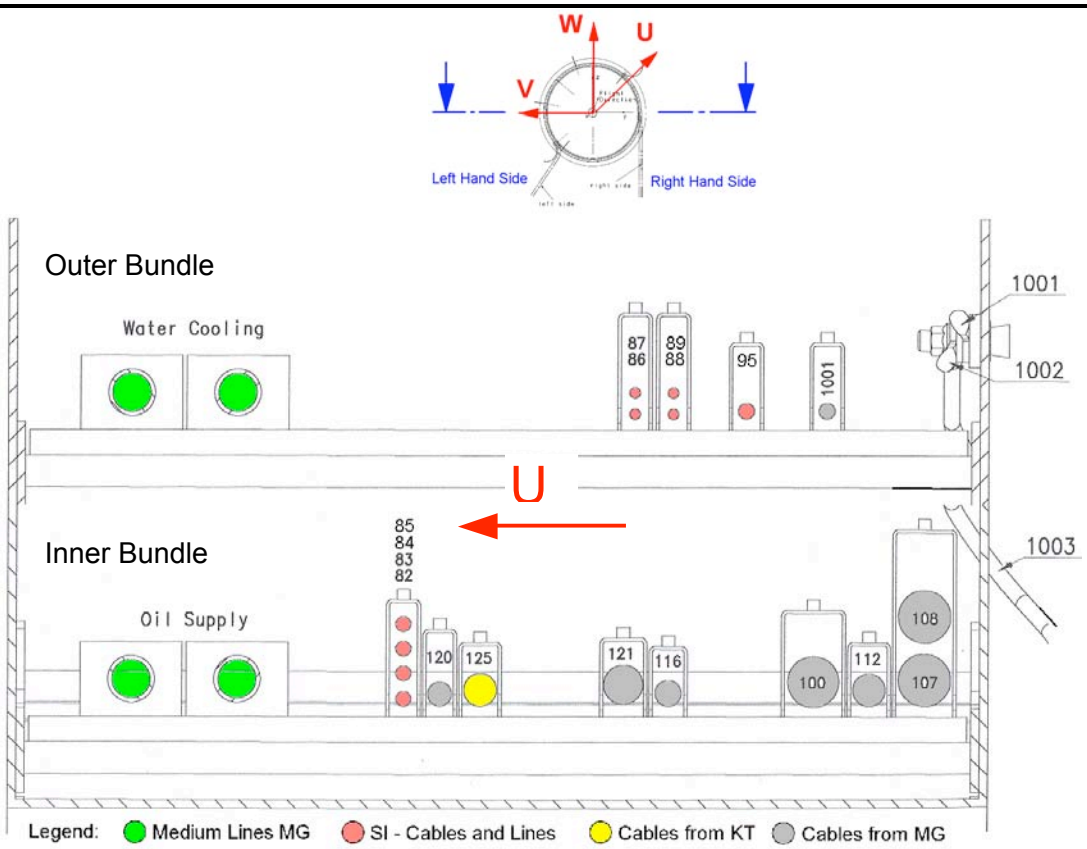

Figure 3: Right Hand Cable Bundle (Power and Medium Lines)

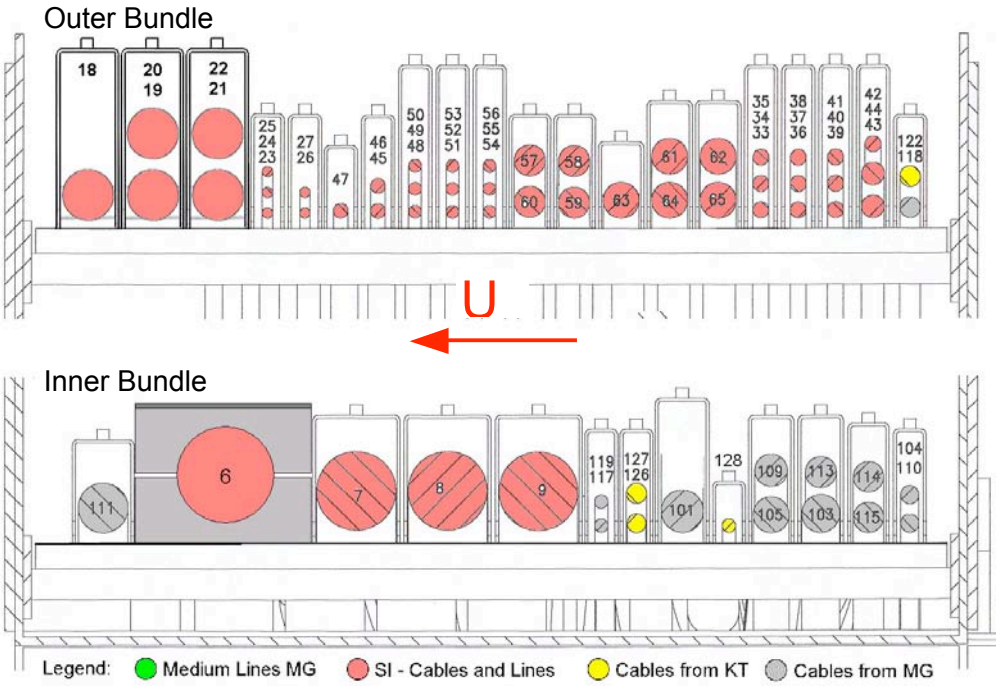

Figure 4: Left Hand Cable Bundle (Signal Lines)

Legend for Figure 3 and 4:

No	J No.	Cable ID
6		SI ∅47 Blower Line
7		SI ∅42 Vacuum Line
8		SI ∅42 Vacuum Line
9		SI ∅42 Vacuum Line
18	J80-J85	SI Fiber Optic
19	J86-J91	SI Fiber Optic
20	J92-J97	SI Fiber Optic
21	J98-J103	SI Fiber Optic
22	J104-J109	SI Fiber Optic
23	J70	SI Coax 50
24	J71	SI Coax 50
25	J72	SI Coax 50
26	J73	SI Coax 50
27	J74	SI Coax 50
~~28-32~~		deleted, see Table 1 (1a)
33	J60	SI SF104 PEM
34	J61	SI SF104 PEM
35	J62	SI SF104 PEM
36	J63	SI SF104 PEM
37	J64	SI SF104 PEM
38	J65	SI SF104 PEM
39	J66	SI SF104 PEM
40	J67	SI SF104 PEM
41	J68	SI SF104 PEM
42	J69	SI SF104 PEM
43	J110	SI Vermillion 20SB4x22-25
44	J111	SI Vermillion 20SB4x22-25
45	J112	SI Video 75
46	**J113**	SI Video 75
47	**J114**	SI Video 75

No	J No.	Cable ID
48	J115	SI Triax ECS
49	J116	SI Triax ECS
50	J117	SI Triax ECS
51	J118	SI Triax ECS
52	J119	SI Triax ECS
53	J120	SI Triax ECS
54	J121	SI Triax ECS
55	J122	SI Triax ECS
56	J123	SI Triax ECS
57		SI Cooling Line
58		SI Cooling Line
59		SI Cooling Line
60		SI Cooling Line
61	J75	SI Twisted Pair 20SB10x22-25
62	J76	SI Twisted Pair 20SB10x22-25
63	J77	SI Twisted Pair 20SB10x22-25
64	J78	SI Twisted Pair 20SB10x22-25
65	J79	SI Twisted Pair 20SB10x22-25
82	J128	SI 110 V 60
83	J129	SI 110 V 60
84	J130	SI 110 V 60
85	J131	SI 110 V 60 Tab. 1 (10)
86	J124	SI 10 kV
87	J125	SI 10 kV
88	J126	SI 10 kV
89	J127	SI 10 kV
90		SI 10 kV/added s. Tab.1 (9) (Delete per telecon 7 March)
~~88-92~~		deleted, see Tab. 1 (8)
95		SI – Grounding / added
100	J400	CP-100-G
101	J401	CD-101-G

No	J No.	Cable ID
~~102~~		Deleted
103	J403	CP-103-G
104	J404	CP-104-G
105	J405	CPD-105-G
107	J407	CPD-107-G
108	J408	CP-108-G
109	J409	CPD-109-G
110	J410	CPD-110-G
111	J411	CPD-111-G
112	J412	CP-112-G
113	J413	CPD-113-G
114	J414	CPD-114-G
115	J415	CPD-115-G
116	J416	CP-116-G
117	J417	CD-117-G
118	J418	CD-118-G
119	J419	CP-119-G
120	J420	CP-120-G
121	J421	CP-121-G
122		CD-122-,123,-124,-129-G
125		CP-125-G
126		CP-126-G
127		CP-127-G
128		CP-128-G
1001	BPU1	Grounding CG-1001
1002		Grounding CG-1002
1003		Grounding CG-1003

The left hand bundle (see Figure 4) contains all the Signal Lines and the right hand bundle (see Figure 3) all the Power and Medium Lines. The Lines for Science Instrument (SI) are generally included in the outer cable bundles. The SI Blower Lines (stainless with braid) are contained in the left hand inner cable bundle. The SI-Grounding is separated from the TA-Grounding. All Panels have a Grounding Bolt (see **Figure 6**) for grounding and bonding the panel carrier. **Figure 5** shows a scheme for the CLA Grounding.

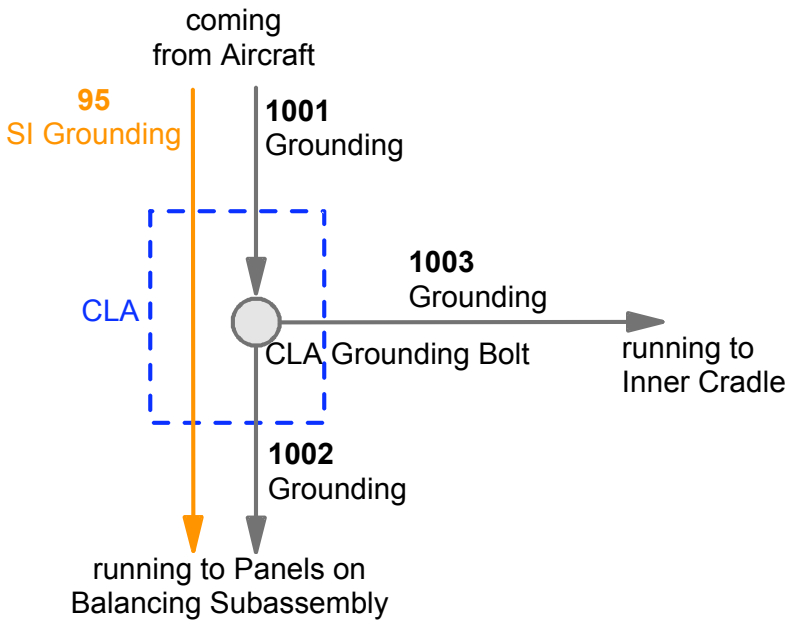

Figure 5: Grounding Scheme CLA

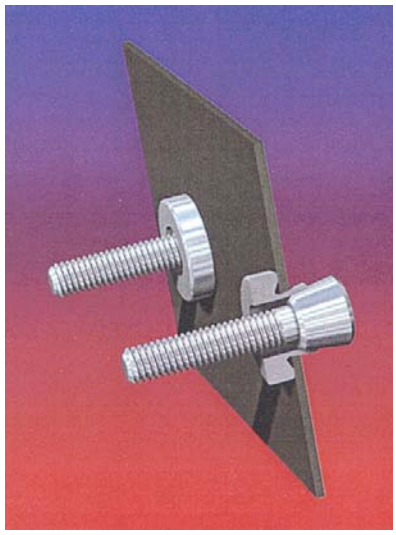

Figure 6: Grounding Bolt

Strain relievers (see Figure 7 and Figure 8) on the CLA, the Cable tray and the Aircraft System hold the cables and lines.

The arrangement of the SI cables and lines within the cable bundles is presented in Figure 3, Figure 4 and in RD 03.

The cable routing is shown in RD 03 and RD 08.

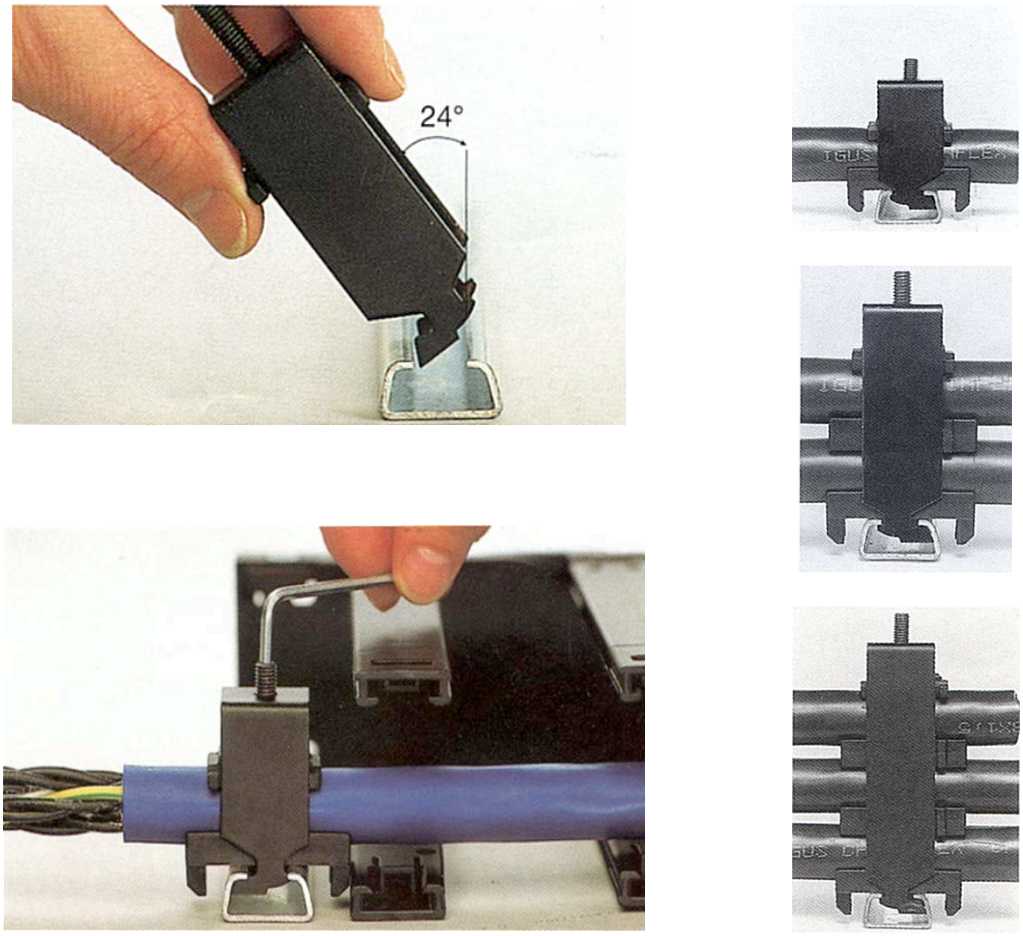

Figure 7: Cable Clamps for Power and Signal Lines

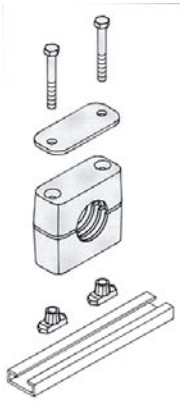

Figure 8: Cable Clamp for Medium Lines

The total cable length from the Aircraft Connector Panels to the Power and Signal Patch Panels on the Balancing Subassembly is for the

- Power Lines (right hand cable bundle) about 15 m (590.55 inch),
- Signal Lines (left hand cable bundles) about 15 m (590.55 inch).

The length from the Patch Panels on the Balancing Subassembly to the Science Instrument has to be added.

4.1.2 Cable Routing CLA / Flange Assembly

All the cables and lines from the Aircraft System to the moving part of the Telescope are routed via the CLA-Cable Tray and the CLA, over the Coarse Drive and the Fine Drive from the CLA to the separate systems.

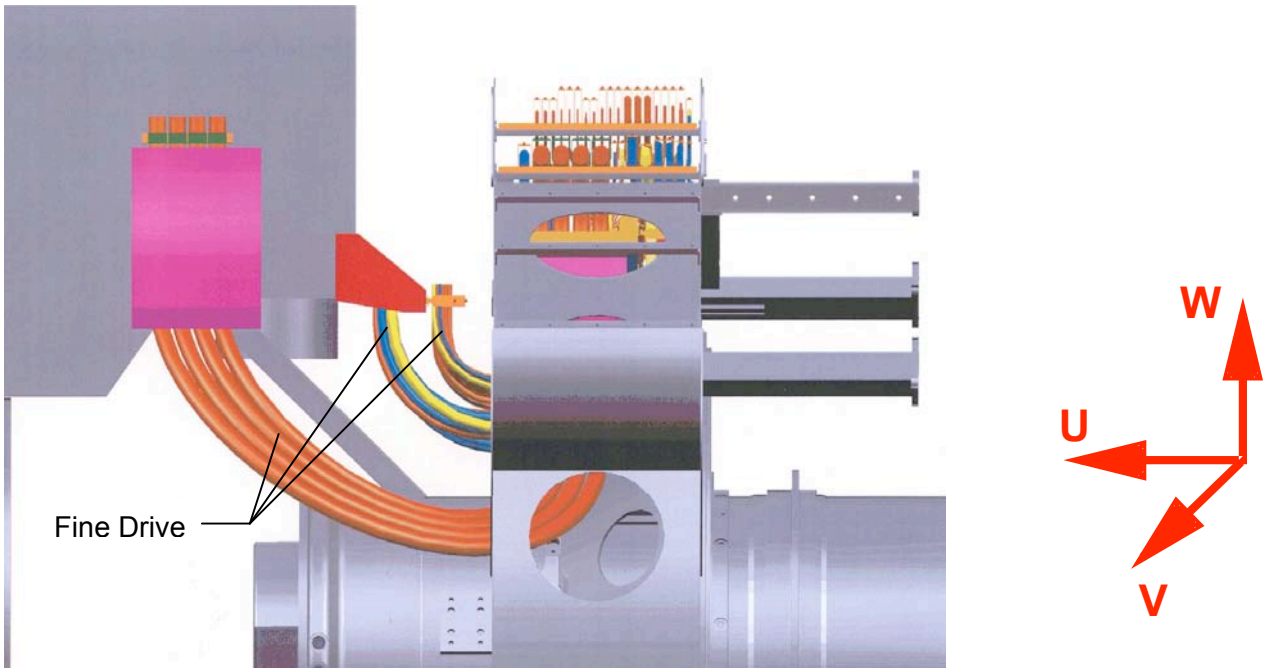

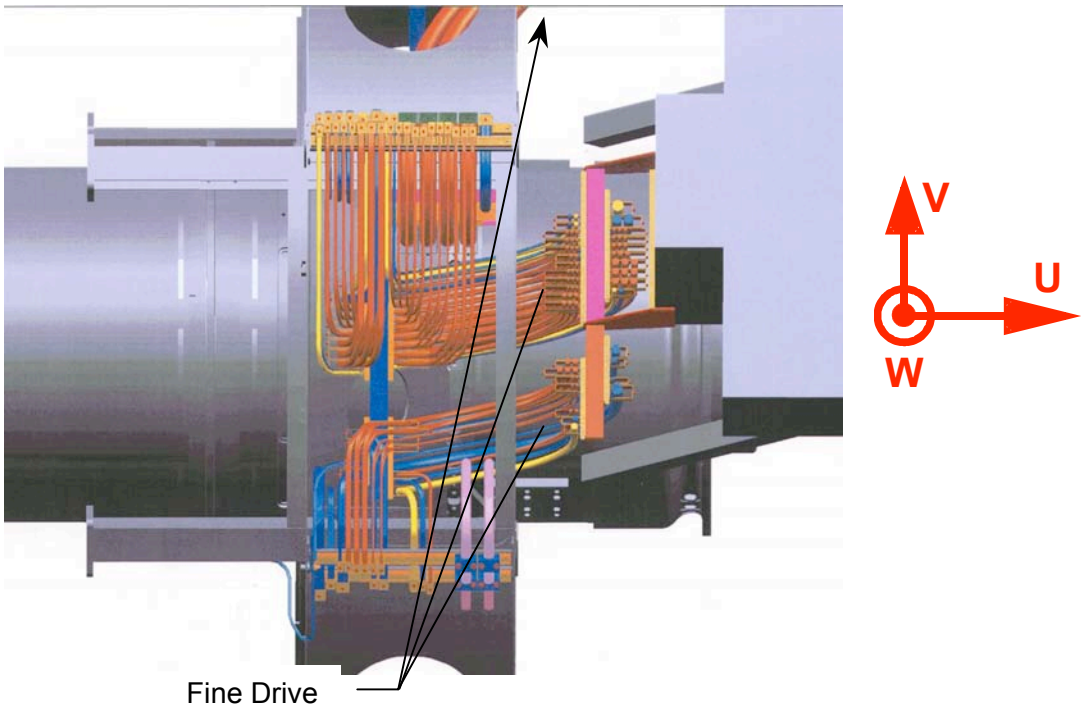

Figure 9: Fine Drive Cable Routing

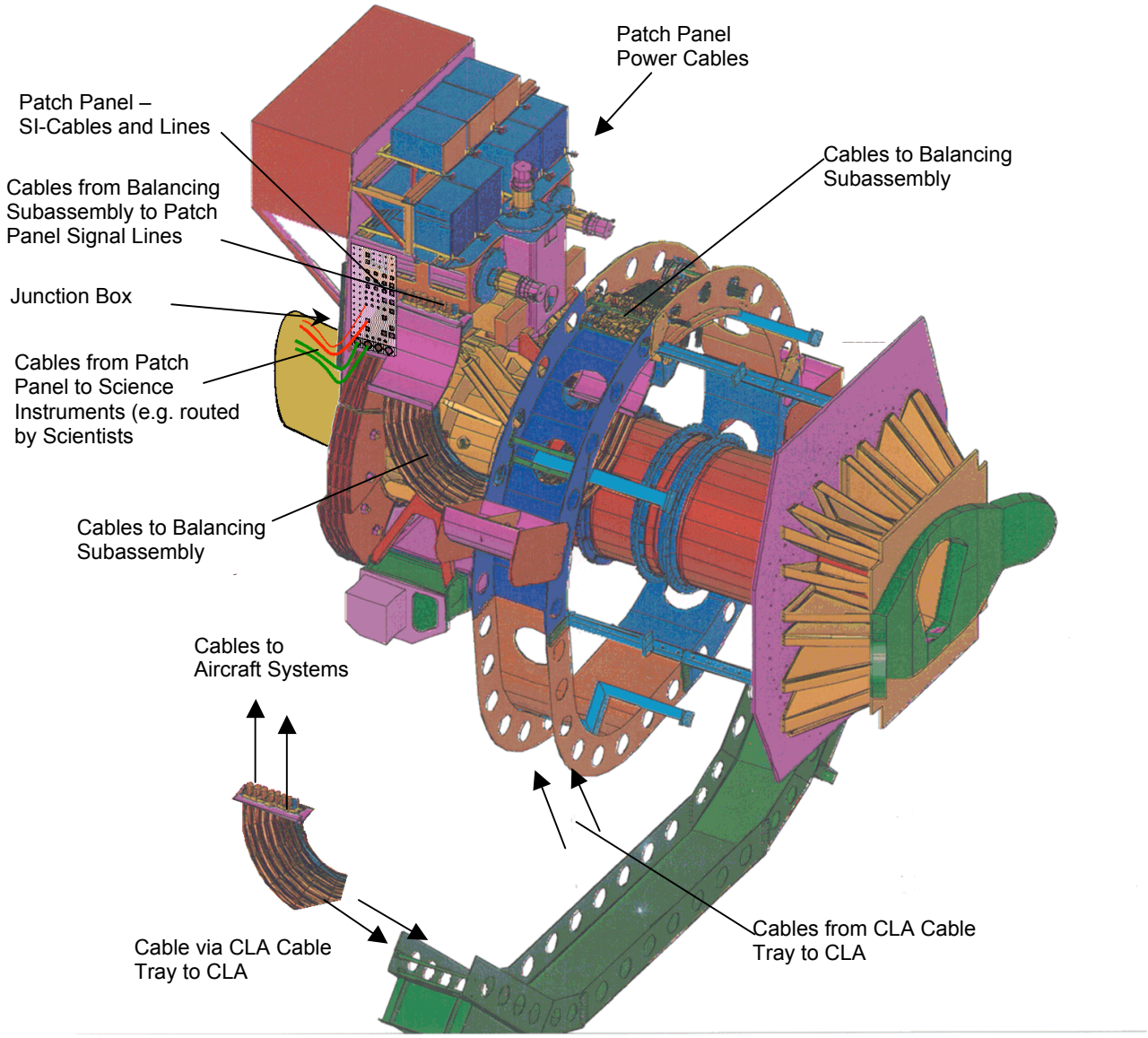

Figure 10: Cable Routing Aircraft System to Science Instrument with Signal Cables

The SI-Cables and Lines run from the Panel on the Aircraft System (designed by USRA – see RD 14) over the CLA-Coarse Drive and the CLA-Fine Drive (see Figure 9) to the Patch Panels (see Figure 13 and Figure 14 - number and size of connectors see Table 1: SI Cable and Connector Specification for TA_SI_01) located on the Balancing Subassembly. From there the SI-Cables and Lines are routed to the Science Instrument. The Power Cables run analogous to the Signal Lines from the Patch Panel on the Aircraft System to the Science Instrument.
All the cables and lines could be connected and disconnected on the Patch Panels by connectors (see Table 1: SI Cable and Connector Specification for TA_SI_01 and following pages).

4.1.3 SI-Patch Panels and Connector Fixations

All Patch Panels are made of a panel carrier, the connector plates and the connectors. The material for the panel carrier and for non isolated connector plates is aluminium. Each Power and Signal Panel from Science Instrument and Telescope Assembly are separated according EMC design specification AD 04.
The Blower and Vacuum Lines have a separated fixation with strain relievers (see Figure 8 and Figure 10). The material of these strain relievers is aluminium for the clamp part and steel for all other parts.
The vacuum and exhaust blower lines are electrically isolated from the SI Patch Panel, CLA cable clamps, and TA. USRA will provide the electrical insulating sleeve sections on the hoses where the hoses are to be clamped in the CLA. However, the TA-C, must provide the electrical isolation up at the SI Patch Panel and TA.

4.1.3.1 Panel fixation and Isolation

The SI Power- and Signal Panels will be isolated to the Balancing Structure. They will be isolated fixed on an beams and isolated screwed on the Balancer Main Plate (see Figure 11: Science Instrument Panel Isolation scheme).

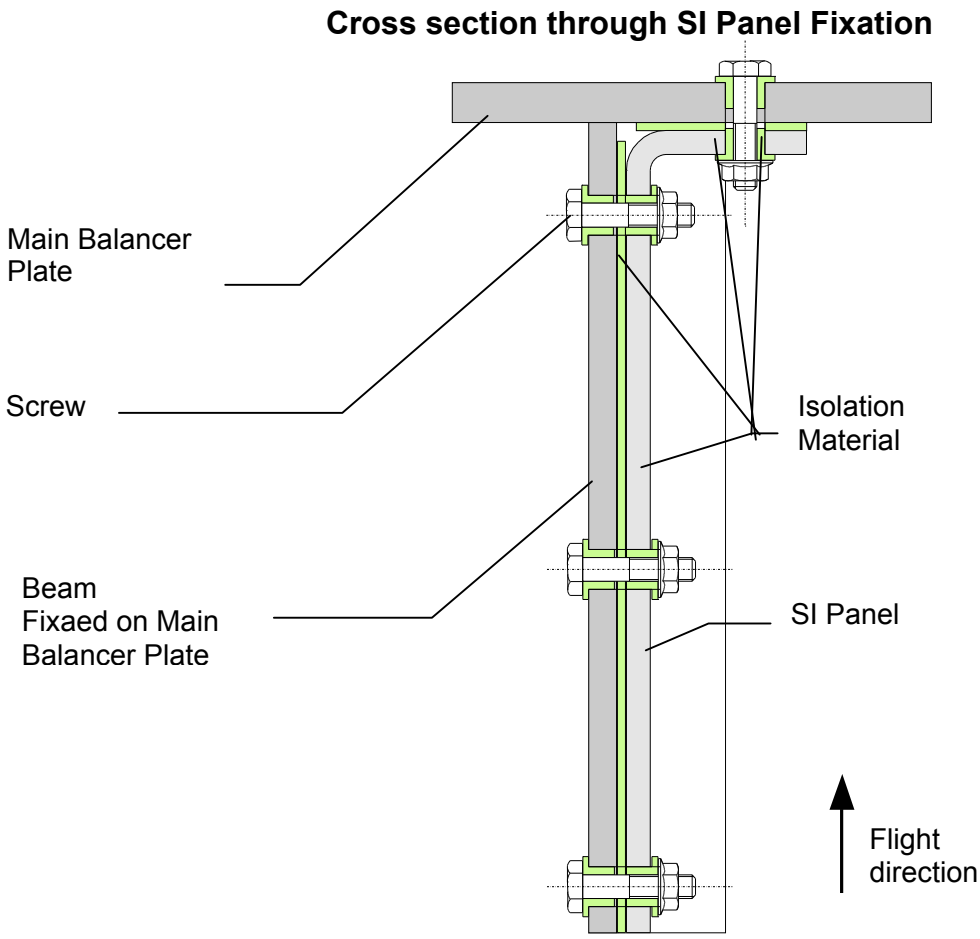

Figure 11: Science Instrument Panel Isolation scheme

On the SI-Signal Panel are the connectors for Signal Lines SF 104 PEM isolated with the Connector Plates against the Patch Panel Carrier. For this connectors are the connector plates from an isolated material (see Figure 12: Connector Fixation). The Reynolds 178-6053 (10kV) lines must be mounted in an electrically insulating panel, as are the SF 104 PEM lines.

4.1.3.2 Connector fixation

All connectors are fixed on the relevant Power- or Signal Patch Panel carrier. Each connector type has a different panel thickness for fixation. Therefore the Patch Panel is made of a carrier frame with a constant thickness. Connector plates that group connectors for specific cable types are attached to the carrier frame. The thickness specifications for these connector plates is itemized in Table 1. Connector plates that are made of conductive material are electrically connected to the carrier frame. For example: all Vermillion type connectors are screwed with four screws with nuts; these Vermillion type connector shells are electrically connected to the connector plate, and all Trompeter type connectors are screwed directly with nuts on a separate connector plate.

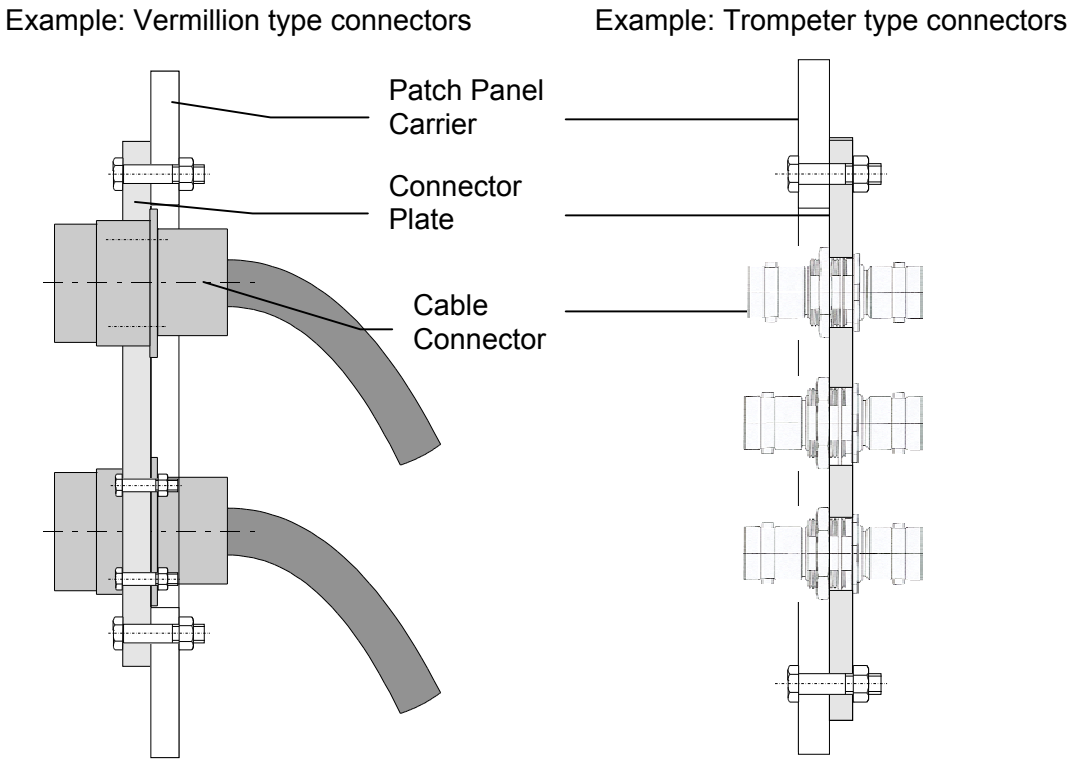

Figure 12: Connector Fixation

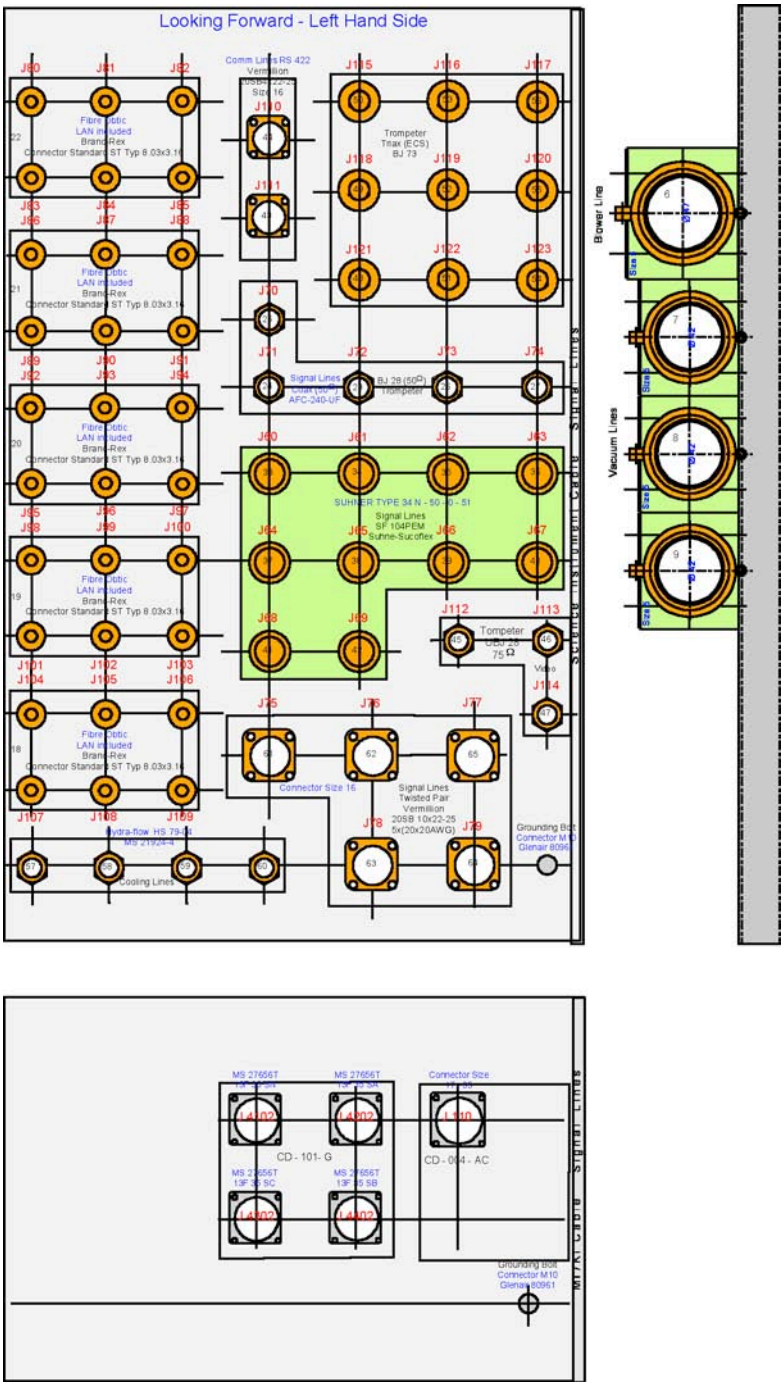

Note: The Numbers used correspond with those of Fig. 3 and 4

Figure 13: Patch Panels Signal Lines

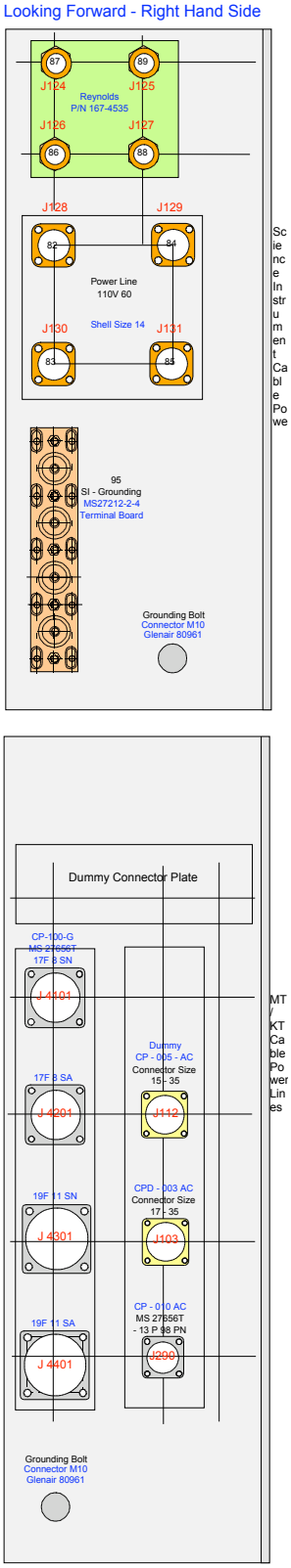

Figure 14: Patch Panels Power Lines

4.1.4 Types and Numbers of Cables and Lines

MT-I-cables and KT-cables are listed with all parameters in document RD 06. SI-cables and lines are listed in Table 1. MT-I-Media Lines are listed in Table 2.
Datasheets of cables, lines and connectors for Science Instrument see chapter 6 Annex 1.

Cable Type	OD (mm)	R_{min} (mm)	Weight (kg/m)	Connector Size (mm) *	Patch Panel Connector	Mates with (For MCCS)	# needed	Thickness Connector Plate (mm)
Signal Lines 1. SF 104 PEM Suhne-Sucoflex	7.7	80	0.121	16 see Figure A 1	18 GHz 34N-50-0-51 Suhner-Sucoflex	N-Type	10	12
1a. Coax - AFC-240-UF Times wave	6.1	20	0.067	12.7 see Figure A 2	BJ28 (50) Trompeter	Std 50 BNC	5	4
2. Twisted Pair Vermillion 20SB 10x22-25 5x(20x20AWG)	17.2	170	0.335	36. 5 square see Figure A 3	Mil-C-83723 Series III Shell Size 20	Mil-C-83723	5	4 **
3. Fibre Optic Brand-Rex	9.2	82	0.1	8.03 x 3.16 see Figure A 4	Mil-C-83522/17-NY Lucent/FSI	Mil-C-83522/16-DNX Std ST Type	5 bundles (30fibres) 30 conn	2
Comm Lines 4. Vermillion 20SB4x22-25 2x (8x20AWG)	10.9	71.1	0.146	31.75 square see Figure A 5	Mil-C-83723 Series III Shell Size 16	Mil-C-83723 Series III	2	4 **
5. LAN (a) see 3	see 3	see 3	see 3	see 3	see Figure 4	Std ST Type	see 3	see 3
6. Video 75 LMR-240-75 Times wave	6.1	20	0.063	12.7 see Figure A 6	UBJ28 (75) Trompeter	Std 75 Ohm	3	4
7. Triax ECS 322001 rev C	5.99	31	0.085	12.7 see Figure A 7	BJ73 Trompeter	PL75C-306 Trompeter	9	3,5
Power Lines 8. Twisted Pair	Del.	Del.	Del.	Deleted	Deleted	Deleted	Deleted	
9. 10 KV Lines Reynolds 167-2669	5.0	76	0.057	12.9 see Figure A 8	167-9096 Reynolds	167-4535 Reynolds	4	7
10. 110 V 60 M27500G12SD 2T23- Shielded TP (12 gauge)	5.87	58.7	0.083	34.1 (square) see Figure A 10	Mil-C-83723 Series III Shell Size 14	Mil-C-83723 Series III Plug	4 cables (4 conn)	4 **
11. Vacuum Line 1.25“ ID Chemfluor PTFE	41.28	140	1.042	KF Adaptor	KF-40 Flange	KF-40Flange	3	
11a. Blower Line 1.5" ID TeleFlex	47	191	1.324	KF Adaptor	KF-40 Flange	KF-40Flange	1	--
12. **Cooling Lines** Hydro-Flow HS89-04	10.2	13	0.07	17.5 (5 sided) see Figure A 12	MS21924-4 see Figure 12	N/A	4	--
13 SI-Grounding Dearborn Standard Copper 8002RT30 Bentley-Harris sleeving #5111001332S	13	100	0.31	For Bolt Ø10 See Figure A 13	AMP Solistrand 330301 Ring Tongue		1	
Total							57	

* The figures listed here are only valid for the data sheets in ANNEX 1

** Max. Panel thickness = complete thickness (from Data sheet) minus 2mm screw head height (for screw M3)

Table 1: SI Cable and Connector Specification for TA_SI_01

	SOURCE			CABLE		DESTINATION			Mechanical Data			Electrical Data										
	Device ID	Connector	Connector Type ①	Cable ID ⑤	Cable Type ⑥	Device ID	Connector	Connector Type ①	Cable ID ⑤	Approx. Weight	Approx. Diam.	Signal Description	A	B	D	P	S	E	Voltage	Current cont/pk	Freq.	Remarks
BD Motors Power	CLA_EndPan (+CLAXNDRI)	J400	MS27656T-25F29SB	CP-100-G	8x(3x16TS)S	Patch Panel Power	J4101 J4201 J4301 J4401	MS27656T-17F8SN 17F8SA 19F11SN 19F11SA	CP-100-G	976g/m	24.03 mm	BD Servo Motors Power +Brakes				X X			150V 24VDC	3/6A	16kHzμ	4x62W 4x10W
BD Motors Sync.	CLA_EndPan (+CLAXNDLO)	J401	MS27656T-19F35SN	CD-101-G	4x(14x24TS)S	Patch Panel Signal	J4102 J4202 J4302 J4402	MS27656T-13F35SN 13F35SA 13F35SB 13F35SC	CD-101-G	800 g/m	20.43 mm	BD Encoders/Commut.		X					<10V	<0.2A	-	
SCC_CAN-a	CLA_EndPan (+CLAXNDLO	J404	MS27656T-11F5SA	CPD-104-G	((2x26TS)spec.+	NECS_1.1 (+P2A11)	J1191	MS27656T-11F5PN	CPD-104G	96g/m	8.79mm	CAN-Bus + DC-Supply (NECS)			X	X			24VDC	2A		(120Ω 50pF 1MHz)
ATCU <> TASCU	CLA_EndPan (+CLAXNDLI)	J418 J458	ST Adapter 2523-11	CD-118-G	2xFiberOptic	ATCU +F1A13	J4280 J4281	ST Adapter 2523-11	CD-118-G	100g/m	<10	Ethernet(FiberOptic)			X				n/a	n/a	n/a	
PPms-Signal	CLA_EndPan (+CLAXNDLI)	J417	BNC _ (50)¥	CD-117-G	Coaxial RG/U 316	ATCU +F1A13	J4241	BNC _ (50)	CD-117-G	150g/m	~6.5mm	Time Strobe		X				X	5V	<0.1A	1kHz	
FDTQ1	CLA_EndPan (+CLAXNDRI)	J407	MS27656T-25F29SN	CP-107-G	3x(3x(3x16TS)S)S	FDTQ UO1.1 FDTQ VO1.1 FDTQ VO2.1	J1821 J1841 J1941	MS27656T-17F8PN 17F8PN 17F8PN	CP-107-G	871g/m	24.65/ 8.82mm	FDTQ Servo Power 1 (U1/V1/V2)				X			150V	22,5/45 A	16kHz μ	
FDTQ2	CLA_EndPan (+CLAXNDRI)	J408	MS27656T-25F29SA	CP-108-G	3x(3x(3x16TS)S)S	FDTQ UO2.1 FDTQ WO1.1 FDTQ WO2.1	J1921 J1861 J1961	MS27656T-17F8PN 17F8PA 17F8PA	CP-108-G	871g/m	24.65/ 8.82mm	FDTQ Servo Power 2 (U2/W1/W2)				X			150V	22,5/45 A	16kHzμ	
FD_Brakes	CLA_EndPan (+CLAXNDLO	J403	MS27656T-15F18SN	CP-103-G	(8x(2x20TS)S	Brake Valves FD_YB1..8	J1121..28	8x Kostal M27 _	CP-103-G	436g/m	18.31 mm	FD Brakes (Solenoid Valves)				X			24VDC	1.5/5A	n/a	
SPS1..3	CLA_EndPan (+CLAXNDLO	J410	MS27656T-11F5SN	CPD-110-G	(2x26TS)spec.+ (2x20TS)S	SPS1 (+P8A01)	J1591	MS27656T-11F5PN	CPD-110-G	96g/m	8.79mm	CAN-Bus + DC-Supply (Spherical Sensors)			X	X			24VDC	<2A		
NT Fans	CLA_EndPan (+CLAXNDRI)	J416	MS27656T-13F98SN	CP-116-G	2x(4x20TS)S	Patch Panel Power	J290	MS27656T-13F98PN	CP-116-G	229g/m	12.2mm	NT Fan Motors				X			200V3~	<2A	400Hz	

	SOURCE			CABLE		DESTINATION			Mechanical Data			Electrical Data										
	Device ID	Connector	Connector Type ①	Cable ID ⑤	Cable Type ⑥	Device ID	Connector	Connector Type ①	Cable ID ⑤	Approx. Weight	Approx. Diam.	Signal Description	A	B	D	P	S	E	Voltage	Current cont/pk	Freq.	Remarks
RIS_RP1/2 Ret.Pumps Mot.	CLA_EndPan (+CLAXNDRI)	J412	MS27656T- 19F11SN	CP-112-G □	(2x(4x16)S)S	RP1 RP2	J1101 J1201	2XAEGA05 2MR04001 250000	CP-112-G □	307g/m	15.22 mm	Pump Servo Drives Power			X X				280V	<10A	16kHzμ	
RIS_RP1/2 Ret.Pumps Aux.	CLA_EndPan (+CLAXNDRI)	J411	MS27656T- 13F35SN	CD-111-G □	2x(4x(2x24TS))S	RP1 RP2	J1102 J1202	2XBEGA08 9MR13000 0002000	CD-111-G □	491g/m	24.07 mm	Pump Servo Drives Aux.	X X	X X					<24V	<0.2A		
RIS_Valves RIA_Val1.._Val4	CLA_EndPan (+CLAXNDLO)	J413	MS27656T- 17F26SN	CPD-113-G □	(4x(6x22)S)S	Mot.Valves 1 Mot.Valves 2 Mot.Valves 3 Mot.Valves 4	J1211 J1212 J1213 J1214	HAN10E HAN10E HAN10E Bürkert 4	CPD-113-G □	432g/m	15.98 mm	Motor Valves (4x)		X X X X		X X X X			24VDC	1.5/3A		Incl. Limit Switches
Gap Sensors 1..4	CLA_EndPan (+CLAXNDLI)	J415	MS27656-T 13F35SB	CPD-115-G □	4x(4x22TS)S	GS Panel (+P2XND1..4)	J176x (x=1..4)	4x MS27656T	CPD-115-G □	322g/m	14.6mm		X					X	<10V	<0.2		
Gap Sensors 5..8	CLA_EndPan (+CLAXNDLI)	J414	MS27656T- 13F35SA	CPD-114-G □	4x(4x22TS)S	Bulkhead (+V2XND)	J1760	GLEN999Y 13-35PN	CPD-114-G □	322g/m	14.6mm		X					X	<10V	<0.2		
Flange Rack POWER1	CLA_EndPan (+CLAXNDRI)	J421	MS27656T- 21F16SN	CP-121-G □	(2x(5x16)S+(3 x20)S)S	TCM F1A21 FCM F1A23 SMCU F1A22	J4411 J4511 J4311	MS27656T- 17F8PN 17F8PN 11F98PN	CP-121-G □	450g/m	18.3mm	Power Supply to SMA Drive Units				X			200V	<10A	400Hz	
Flange Rack POWER2	CLA_EndPan (+CLAXNDR	J420	MS27656T- 13F8SN	CP-120-G □	(3x20)S	ATCU F1A24	J4211	MS27656T- 11F98PN	CP-120-G □	170g/m	11.3mm	Power Supply to Control Units				X			115V	<10A	60Hz	
GROUNDING	CLA_EndPan (+CLAXNDR	BPU1	LUG	CG-1001 □	150-405	CLA	G1XG01: 1	LUG	CG-1001 □	100g/m	10mm_	Primary TA Grounding							0V	n/a	n/a	
IRIG-B	CLA_EndPan (+CLAXNDLI)	J419	BNC _ (50_)	CP-119-G □	Coax 50Ω RG/U 316 MIL-C-17	+F1A22 (SMCU)	J4371	BNC _ (50_)	CP-119-G □	150g/m	~6.5mm	Time code Signal			X				<10V	<0.1A	-	
SMCU <>TAMCP	CLA_EndPan (+CLAXNDLI)	J422 J423	ST Adapter 2523-11	CD-129-G □	2xFiberOptic	+F1A22 (SMCU)	J4380 J4381	ST Adapter 2523-11	CD-129-G □	100g/m	<10	Ethernet (FiberOptic)			X				N/a	n/a	n/a	
Sensor Supply + Safety - Cabin Cr.	CLA_EndPan (+CLAXNDLO)	J405	MS27656T- 15F35SN	CPD-105-G □	(5x(6x22)S)S	P7XC31(B14) P6XC42(B15) P6XC52(B17) P3XC44(B16) P3XC51(B12)	J1341 J1351 J1371 J1361 J1323	MS27656T- 9F35PN 9F35PN 9F35PN 9F35PN 9F35PN	CPD-105-G □	587g/m	17.3mm	FDTQ Temp. Sensors FD Hardstops/BrakeSens RIA Level Sensors RIA Pocket Pressure		X X		X X X X X	X X		24V DC	n/a	n/a	Sensor Supply and Hardwired Interlocks

	SOURCE			CABLE		DESTINATION			Mechanical Data			Electrical Data										
	Device ID	Connector	Connector Type ①	Cable ID ⑤	Cable Type ⑥	Device ID	Connector	Connector Type ①	Cable ID ⑤	Approx. Weight	Approx. Diam.	Signal Description	A	B	D	P	S	E	Voltage	Current cont/pk	Freq.	Remarks
Sensor Supply + Safety - Cav. Cr.	CLA_EndPan (+CLAXNDLO	J409	MS27656T-15F35SA	CPD-109-G □	(4x(6x22)S)S	Bulkhead (+V2XND)	J1300	GLEN999Y 15-35PN	CPD-109-G □	490g/m	15.7mm			X		X	X		24V DC	<0.5A	n/a	Sensor Supply and Hardwired Interlocks
Grounding (Flange Rack)	CLA	G1XG01:2	LUG	CG-1002	150-405	Flange Assembly	F1XG01:1	LUG	CG-1002	100g/m	10mm_								N/a	n/a	n/a	
Grounding (Cab. Inner Cradle)	CLA	G1XG01:3	LUG	CG-1003	150-405	Inner Cradle	V1XG01:1	LUG	CG-1003	100g/m	10mm_								N/a	n/a	n/a	
Grounding (Gyro Unit)	Flange Assembly	F1XG01:2	LUG	CG-1004	150-405	GYSU C1A01	C1A01:1	LUG	CG-1004	100g/m	10mm_								N/a	n/a	n/a	
Grounding (Cab. outerCr.Bulkhea	CLA_EndPan (+CLAXNDR	BPU1	LUG	CG-1005	150-405	Outer Cradle	V1XG02:1	LUG	CG-1005	100g/m	10mm_								n/a	n/a	n/a	

Remark: Grounding CG-1002 and CG-1003 runs not over the Coarse Drive Loop; CG-1003 runs not over the Fine Drive Loop
This table is a part from RD 06.

Table 2: MT Cable and Connector Specification

Cable ID	Source			Destination			Mecanical Data		Electrical Data			Remarks
	Device ID	Connector	Connector Typ	Device ID	Connector	Connector Typ	Mass [g/m]	Diameter [mm]	Voltage [V]	Current [A]	Frequency [Hz]	
CD-122-G 1)	FPI Controller	P129	2566-2 ST Ruggedized	CLA U4	P440	2566-2 ST Ruggedized	1.3	3	-		-	fiber imager data
CD-123-G 1)	FFI Controller	P132	2566-2 ST Ruggedized	CLA U4	P441	2566-2 ST Ruggedized	27.3	3	-		-	fiber imager data
CD-124-G 1)	WFI Controller	P135	2566-2 ST Ruggedized	CLA U4	P442	2566-2 ST Ruggedized	27.3	3	-		-	fiber imager data
CD-126-G	CLA U4	P444	MS 27467-T-11 F 35PN	IMCC	P141 (P444)	see other parts list	213.2	8				CAN bus
CD-126-G	CLA U4	P444	MS 27467-T-11 F 35PN	PPCC	P161	FU 25 P7		8				CAN bus
CP-125-G	CLA U1	P443	MS 27467-T-17 F 26PN	FPI Controller	P127	MS 27467-T-09 F 35SN	504.4	12	115		60	Power Controller
CP-125-G	CLA U1	P443	MS 27467-T-17 F 26PN	FW NT Panel	P103 (P443)	see other parts list		12	115		60	Power Controller
CP-125-G	CLA U1	P443	MS 27467-T-17 F 26PN	GRHA	P172	FU 09 S7		12	115		60	Power Controller
CP-125-G	CLA U1	P443	MS 27467-T-17 F 26PN	WFI Controller	P133	MS 27467-T-09 F 35SN		12	115		60	Power Controller
CP-125-G	CLA U1	P443	MS 27467-T-17 F 26PN	FFI Controller	P130	MS 27467-T-09 F 35SN		12	115		60	Power Controller
CP-127-G	CLA U4	P445	MS 27467-T-21 F 11PN	PPCC	P160	FU 09 S7	296.4	9	28		-	controller power
CP-127-G	CLA U4	P445	MS 27467-T-21 F 11PN	IMCC	P140	FU 09 S7		9	28		-	controller power
CP-127-G	CLA U4	P445	MS 27467-T-21 F 11PN	AMPM	P150 (P445)	see other parts list		9	28		-	controller power
CP-128-G							41.6	4				Dummy

Remark: 1) Cable CD122-G, CD123-G, CD124-G; CD129-G (Table 2) is bundled in one cable with diameter ~10mm
Cables and Connectors with dimensions and weight from Kayser-Threde are listed in RD 12

Table 3: KT Cables and Connectors

Medium Type	OD (mm)	R_{min} (mm)	Weight** (kg/m)	Connector Size (mm)	Comments *	# needed
Water Cooling Supply	36.1	187.4	1.8	see RD 10	hoses	1
Water Cooling Return	36.1	187.4	1.8	see RD 10	hoses	1
Oil Supply	36.1	187.4	1.8	see RD 09	hoses	1
Oil Return	36.1	187.4	1.8	see RD 09	hoses	1
TOTAL						4

* all TA Media Lines are fixed mounted with pipes on the CLA. For Coarse Drive Loop are hoses used
** all TA Media Lines are filled

Table 4: TA Media Lines

4.1.5 Location of Mounting Points

All the cables and Lines including Sciences Instrument cables and lines are hold by Strain Relievers or Connectors at the following positions (see Figure 15 and Figure 16)

- Connector Board (designed by Raytheon – refer to RD 02 and RD 14)
- Aircraft refer to RD 02
- CLA Cable Tray refer to RD 02
- CLA (see detailed figure “Balancing and CLA”)
- Balancing
- Patch Panels Balancing

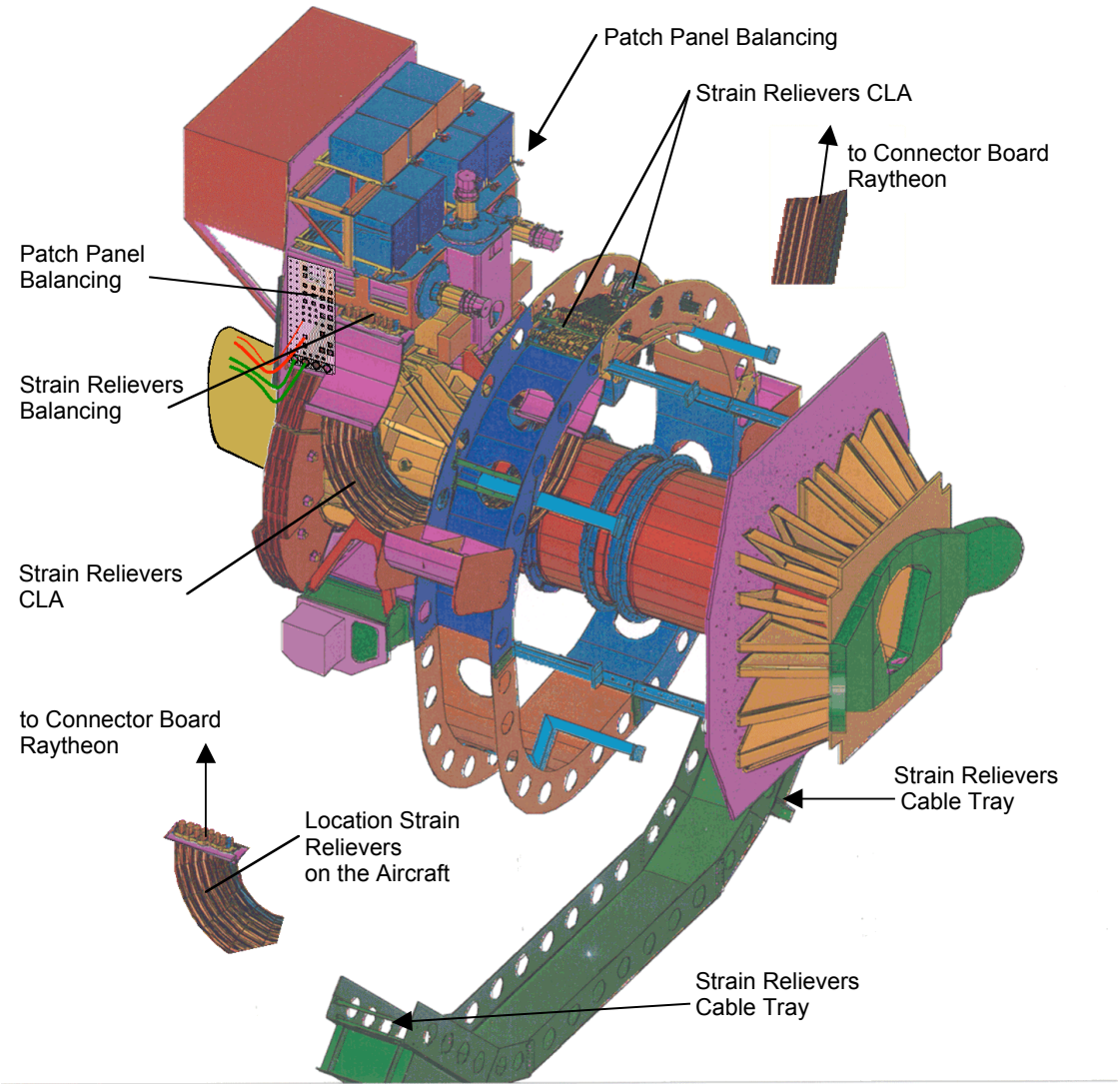

Figure 15: Location of Mounting Points

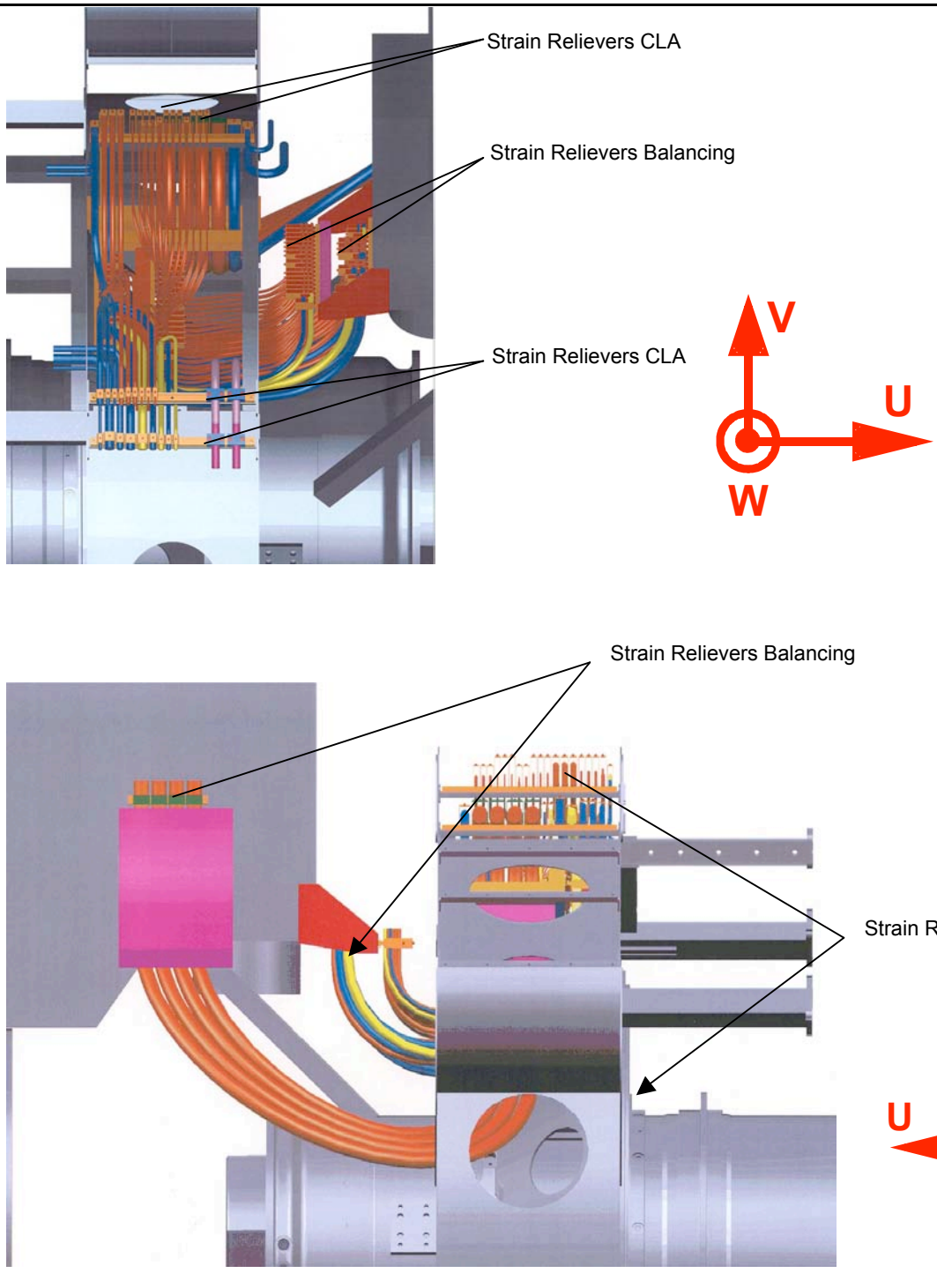

Figure 16: Mounting Points - Balancing and CLA

4.1.6 Dynamic Loads

The dynamic loads for the strain relievers on the aircraft and the Cable tray are shown in

RD 02.

4.2 Responsibilities

A Table of Responsibilities for SI-Cables, -Lines and Connectors is also shown in RD 02

Supplying SI cables, -lines and -hoses and the connectors for these cables, including those mounted in the Patch Panels on the Balancing Subassembly, and those that connect with the Aircraft System Patch Panel.	USRA
USRA shall supply the TA-C with cables, -lines and -hoses of 15 m (590.55 inch) in length with connectors installed on the side connecting to the Patch Panel on the Balancing Subassembly. The connectors that connect with the Aircraft System Patch Panel will not be attached until JAITV.	USRA
TA-C is responsible for the Patch Panel on the Balancing Subassembly and the electrical isolation for the Patch Panel.	TA-C
TA-C is responsible for installing the SI cables in CLA and installing the panel mount connectors in the Patch Panel at the Balancing Subassembly if the connectors and couplers are attached on the cables and lines. This activity will be done during YAITV at Waco	TA-C (depending on contract change)
Delivery and Mounting of SI Cables Connectors and SI-Hoses Connectors on the Cables and Lines	USRA

4.3 Environmental

Temperature:	operating cabin	5°C.... 35°C
	exposure cabin	-40°C... +70°C
Shockproof acc.:	MIL-Std 810E	
Humidity:		5 - 90 %

4.4 Safety

Cable plug connectors selected are standard bayonet or threaded style and are self-

locking on installation. Selected panel mount connectors are secured via locking nut assemblies. Cutouts and assembly procedures for panel mount connectors are designed to positively prevent panel mount connector rotation during connection with external cabling. Cable materials have been selected to be compliant with 14 CFR Part 25 (FAR Part 25). Pin/socket arrangement for each connecter has been selected according to general best engineering practices for aircraft wiring.

5 SRM & QA

5.1 Quality Assurance

Quality Assurance will verify each hardware interface to the drawing, and participate in testing by reviewing and verifying plans and procedures; witnessing tests; and approving reports in accordance with PD96100021-000 (PM21), for the USRA side of the ICD, and SOF-PLA-MG-0000.0.03, Safety, Reliability, Maintainability and Quality Assurance (SRM & QA) Plan, for the TA-C side of the ICD, respectively.

5.2 Safety

Cable plug connectors selected are standard bayonet or threaded style and are self-locking on installation. Selected panel mount connectors are secured via locking nut assemblies. Cutouts and assembly procedures for panel mount connectors are designed to positively prevent panel mount connector rotation during connection with external cabling. Cable materials have been selected to be compliant with 14 CFR Part 25 (FAR Part 25). Pin/socket arrangement for each connecter has been selected according to general best engineering practices for aircraft wiring.

This ICD does not contain interface design information attributed to the design control of hazards identified in PD96165004-000 (PA10-002, The Observatory Hazard Analysis).

5.3 Verification

Verification plan for this interface is documented in PM12, SOFIA Observatory Integration, Test and Verification Plan, for the USRA side of the ICD, and in SOFIA TA Verification Plan, SOF-PLA-MG-0000.0.13, for the TA-C side of the ICD, respectively.

6 Annex 1

Datasheets of cables, lines and connectors for Science Instrument

CABLE TYPES

THE UNIVERSAL ONES SF 104, SF 104P

SUCOFLEX® 104 and 104P, the cables that can be universally applied with the widest range of connector types, are available with most ruggedizations. In applications in which flexibility is the critical factor, the cable type 104P must be applied. In conjunction with the Q adaptor, which is a simple system for exchanging the connectors and the special connections for HP systems, the two types constitute the ideal choice for use as test cables on network analyzers. For assemblies used in EMC–critical applications, the M ruggedization is available. This results in yet another considerable improvement of the high screening effectiveness below 100 MHz.

Cable #1 of Table 1

Mechanical and general data

SUHNER® type	Order code	Cable	Ruggedization	Temperature minimum (°C)	Temperature maximum (°C)	Weight (g/m)	Outer-Ø (mm)	Bending radii static (mm)	Bending radii dyn. (mm)
SF 104	S4	104	—	–55	+165	72	5.5	16	25
SF 104A	SA4	104	A	–50	+ 80	162	10.3	30	50
SF 104B	SB4	104	B	–55	+165	177	10.0	45	45
SF 104C	SC4	104	C	–25	+135	179	10.3	30	50
SF 104D	SD4	104	D	–55	+165	84	6.1	20	30
SF 104E	SE4	104	E	–50	+ 80	68	5.5	16	25
SF 104EA	SEA4	104	E + A	–50	+ 80	158	10.3	30	50
SF T04EM	SFM4	104	E + M	–50	+ 80	121	7.7	40	80
SF 104G	SG4	104	G	–50	+100	212	13.7	60	00
SF 104P	F4	104P	—	–55	+165	69	5.5	16	25
SF 104PA	FA4	104P	A	–50	+ 80	159	10.3	30	50
SF 104PB	FB4	104P	B	–55	+165	174	10.0	45	45
SF 104PE	FE4	104P	E	–50	+ 80	68	5.5	16	25
SF 104PEA	FEA4	104P	E + A	–50	+ 80	158	10.3	30	50
SF 104PEM	FEM4	104P	E + M	–50	+ 80	123	7.7	40	80

Electrical data

SUHNER® type	Impedance nominal (Ω)	Capacity (pF/m)	Signal delay (ns)	Frequency maximum (GHz)	Voltage maximum (V_{rms})
SF 104	50	85	4.28	26.5	800
SF 104P	50	85	4.28	26.5	800

*) Attenuation and C.W. power performance curves, see following pages

Attenuation calculation

$$\alpha_{25} = a \cdot \sqrt{f\ (GHz)} + b \cdot f\ (GHz) \qquad (dB/m)$$

SUHNER® type	Nominal a	Nominal b	Max. a	Max. b
SF 104	0.229	0.0071	0.252	0.0078
SF 104P	0.260	0.0150	0.286	0.0165

Information on the attenuation characteristics at temperatures other than +25 °C is given in the "Engineering information" section on page 73, and more detailed data on "Microwave test cables for network analyzers" in the "Special solutions" section on page 50.

CABLE TYPES
THE UNIVERSAL ONES SF 104, SF 104P

Nominal and maximal cable attenuation

Cable #1 of Table 1

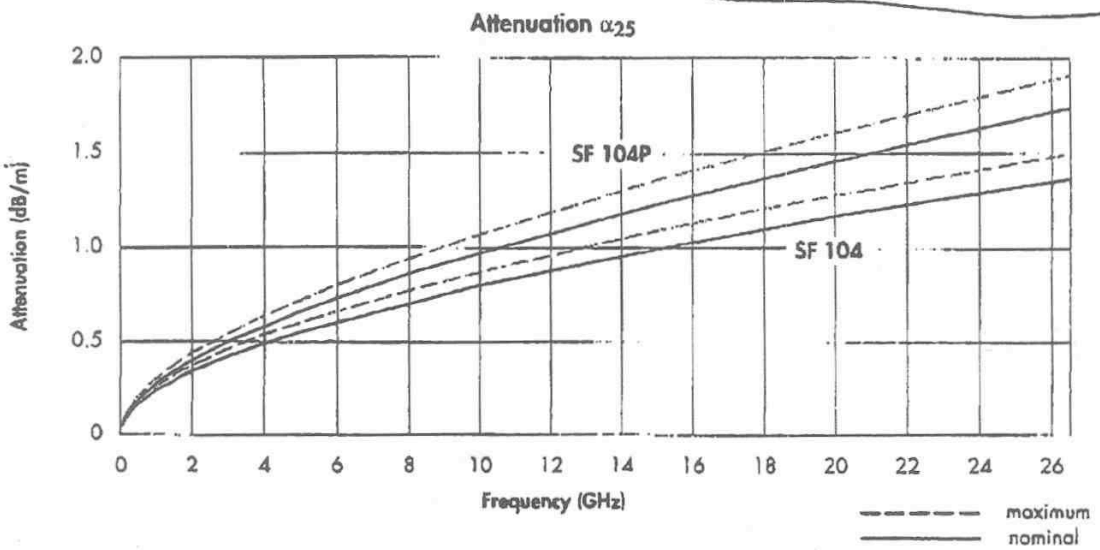

Assembly insertion loss

The nominal or maximum loss at +25 °C of an assembly provided with two connectors (male or female) is calculated according to the following formula:

$$\text{Assembly insertion loss} = \alpha_{25} \cdot \ell\,(m) + 0.07 \cdot \sqrt{f}\ (GHz) \quad (dB/Assembly)$$

Nominal assembly insertion loss

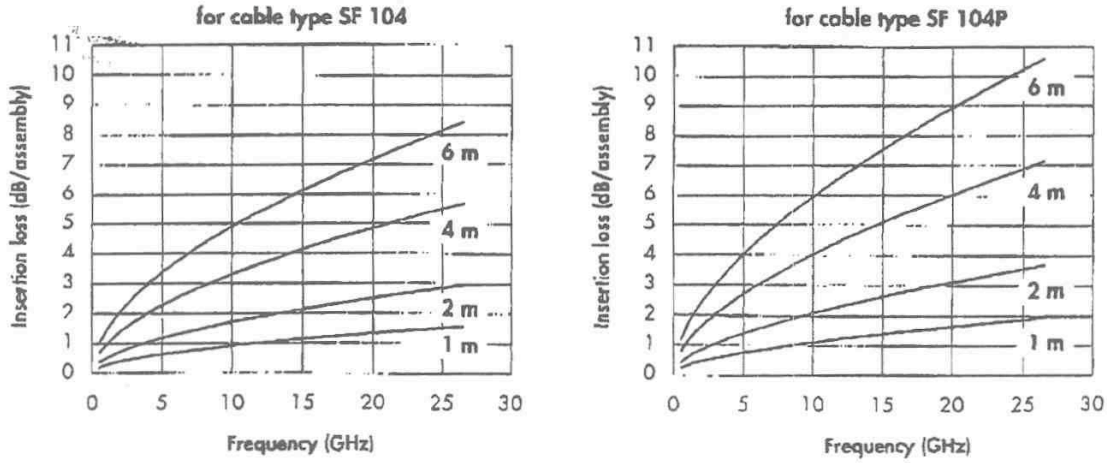

CABLE TYPES
THE UNIVERSAL ONES — SF 104, SF 104P

Cable #1 of Table

Maximum C.W. power handling capacity

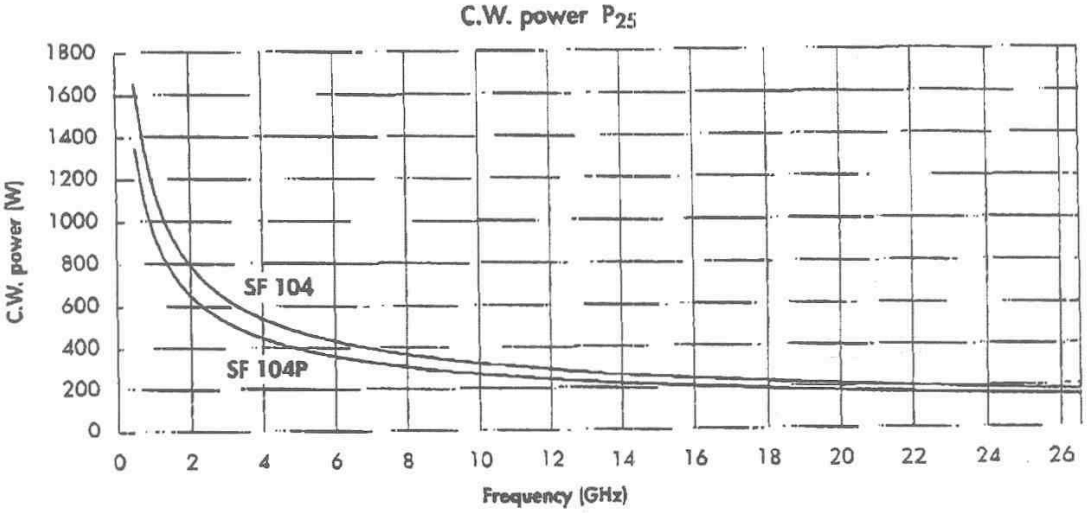

These values only apply to SUCOFLEX® 104 and 104P types with FEP jacket at +25 °C and at sea level. Other jacket materials and additional ruggedizations, the ambient temperature and operating altitude will influence the maximum power handling capacity.

⇒ **Note:** More information on the power handling capacity is given in the "Engineering information" section on page 68.

Normalized screening effectiveness α_S for SF 104, SF 104P (incl. rugged. M)

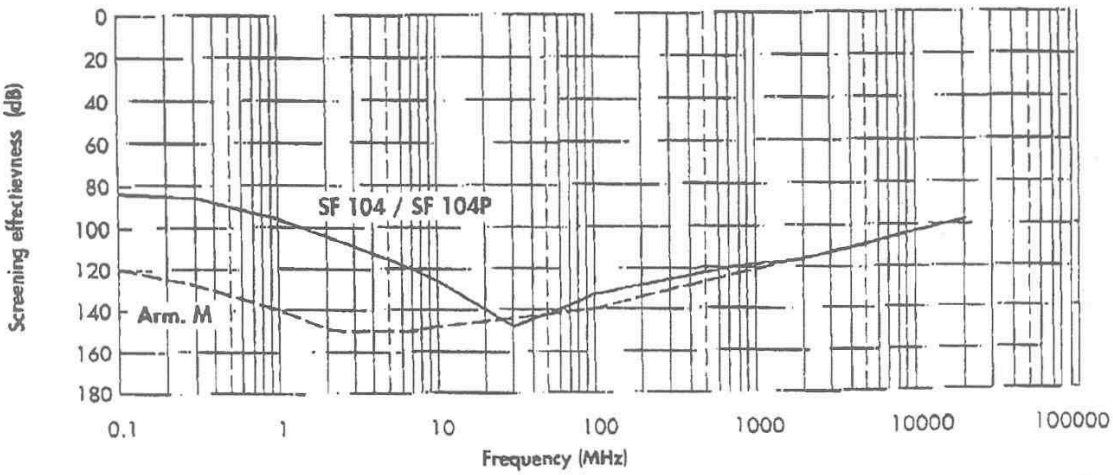

⇒ **Note:** More information on the screening effectiveness is given in the "Engineering information" section on page 74.

CABLE TYPES
THE UNIVERSAL ONES — SF 104, SF 104P

Phase performance

Cable #1 of Table 1

The electrical length variation as a function of temperature and torsion will be calculated for SF 104 and SF 104P by using the following formula:

$$\Phi = \Phi_{25} \cdot \left(1 + \frac{\Phi_\tau}{10^6}\right) + \Phi_T \qquad \text{(el°)}$$

Φ:	Resulting electrical length	(el.°)
Φ_{25}:	Electrical length at +25 °C	(el.°)
Φ_τ:	Phase variation for temperature change	(ppm)
Φ_T:	Phase variation for torsion	(el.°)

Φ_{25} can be calculated according to the formula given in the "Engineering information" section on page 76.

Values for SF 104 and SF 104P

Phase change for torsion (26.5 GHz)

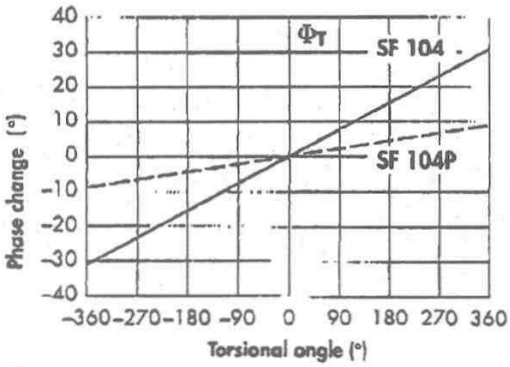

Phase change for bending (up to 18 GHz)

If cable type **SF 104P** is subjected to a 360° bending with dynamic bending radius of 25 mm the phase change $\Delta\Phi_B$ does not exceed 3° from DC up to 18 GHz.

Phase variation for temperature change

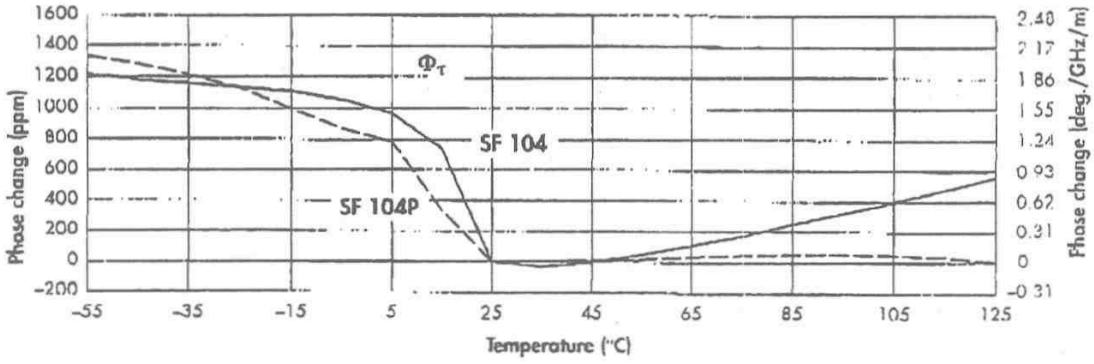

817 867 4489

Flange Receptacles, male for Micro-Strip

quare flange mounting

Protruding dielectric

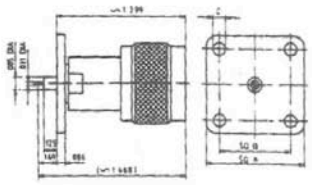

SUHNER TYPE 50 Ω	SUHNER TYPE 75 Ω	Ident. No.	US-MIL	Weight oz.	Dimension in. A	B	C
13 N-50-0-59		642083		~1.76	1.00	0.720	0.126
13 N-50-0-60		642084		~1.52	0.689	0.50	0.100

Precision Adaptors

N-N 50Ω DC-18 GHz

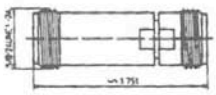

Fig. 1

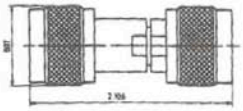

Fig. 2

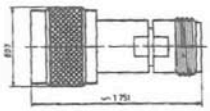

Fig. 3

SUHNER TYPE 50 Ω	SUHNER TYPE 75 Ω	Ident. No.	US-MIL	SWR	Fig.	Weight oz.	Notes
31 N-50-0-51		543383		1.03 + 0.01f/GHz	1	1.38	female - female
32 N-50-0-51		543917		1.03 + 0.01f/GHz	2	2.19	male - male
33 N-50-0-51		544001		1.03 + 0.01f/GHz	3	1.62	male - female

Panel Mounted Adaptor

Female - Female

Single hole mounted

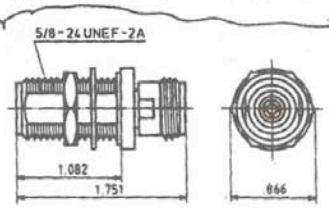

SUHNER TYPE 50 Ω	SUHNER TYPE 75 Ω	Ident. No.	US-MIL	SWR	Mounting hole	Weight oz.	Panel thickness max.
34 N-50-0-51		544593		1.03 + 0.01f/GHz	ML 12	1.48	0.492 in.

Within-Series-Adaptors 50Ω/75 Ω

Female - Female

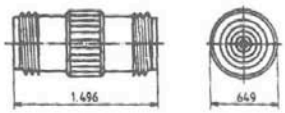

SUHNER TYPE 50 Ω	SUHNER TYPE 75 Ω	Ident. No.	US-MIL M 55339/	Weight oz.	Notes
31 N-50-0-2		542382	07-00029	1.83	replaces UG-29C/U
	31 N-75-0-2	542612		1.73	

AI = Assembly instructions
Cable groups see page 9

Assembly tools see page 205
Mounting holes see page 219

64 SUHNER N

Figure A 1

REV. STATUS SHEETS	REV.LTR.	B				REVISIONS			
	SHEET NO	1				LTR	DESCRIPTION	DATE	BY
						-	Released	03/06/96	MTP
						A	Clarify FAR Requirement	09/13/96	MTP
						B	General Update	11/27/96	MTP

I. CONSTRUCTION

	DIAMETER
Center Conductor: 7 Strand Silver Plated Copper	.059"
Dielectric: Gas Injected Foam Polyethylene	.150"
Shield: Bonded Aluminum-Polyester-Aluminum Tape	.155"
36 GA Tinned Copper Braid(90%k)	.178"
Jacket: Modified Low Smoke Low Toxicity Zero Halogen Polyolefin	.242"

II. ENVIRONMENTAL AND MECHANICAL PROPERTIES

Cable 1a of Table 1

Weight: 45 lbs per 1000 feet
Operating Temperature: -40°C to +85°C
Minimum Bend Radius: 3/4"
Flammability: Meets IEC 332-1 and -3 requirements.
Meets FAR Part 25, Par. 25.853B and/or 25.1359(d)
Smoke Emission: Meets IEC 1034-1 requirements.
Conforms to NES 711 maximum smoke index test.
Toxic Fume Emission: Meets NES 713 maximum toxicity index value requirements.
Acid Gas Generation: Meets IEC 754-1 requirements.
Passes MIL-C-17G maximum acid gas requirements.

III. ELECTRICAL PROPERTIES

Impedance: 50 ohms
Capacitance: 24.8 pF per foot
Velocity: 82%

Attenuation @ 10 MHz:	0.95 dB per 100 feet
100 MHz:	3.03 dB per 100 feet
1000 MHz:	9.76 dB per 100 feet
DC Resistance - Center Conductor:	4.9 Ohms per 1000 feet

VSWR: 1.35:1 max. from 10 MHz to 1000 MHz

IV. CABLE MARKING: "AFC-240-ULTRAFLEX-FR TIMES MICROWAVE SYSTEMS 68999 AA-8489"

V. NOTES

1) All tests performed in accordance with MIL-C-17(current issue).

Unless otherwise specified dimensions in inches. Tolerances are applicable when specified.	Approvals			TIMES MICROWAVE SYSTEMS Wallingford, CT 06492		
	Drawn	MTP	04/15/96	AFC-240-Ultraflex-FR Flame Retardant, High Performance Air Frame Communications Coax		
	Check					
	PrjMg			Size A	Code Ident 68999	Dwg.No. AA - 8489
	PrdMg					
MI 54103	QAMgr			Scale: NA	Rev. (B)	Sheet: 1 of 1

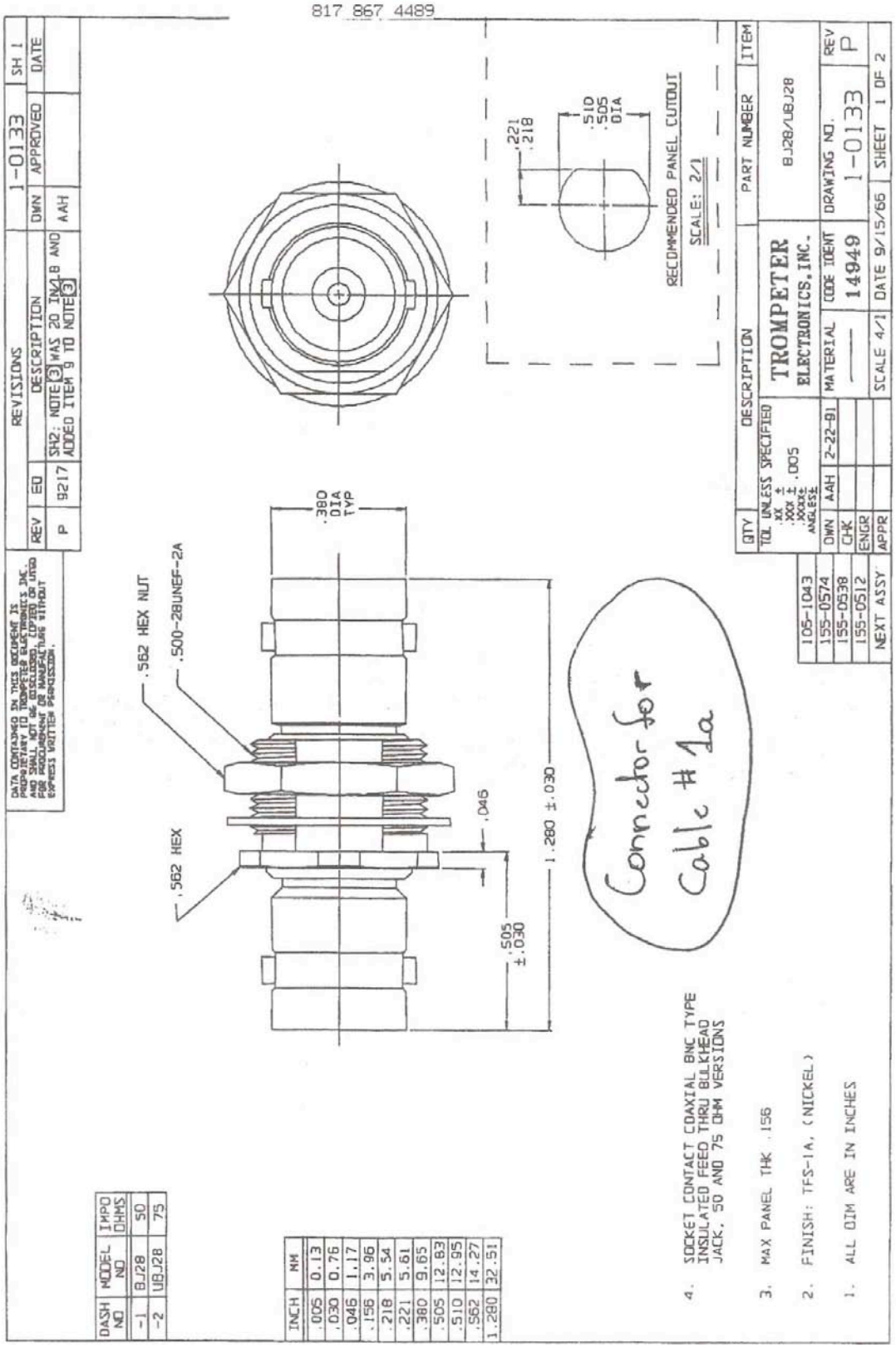
817 867 4489
REVISIONS
REV
ED
DESCRIPTION
P
9217
SH2: NOTE 3 WAS 20 IN 4 B AND ADDED ITEM 9 TO NOTE 3
1-0133
SH 1
DWN
APPROVED
DATE
AAH
DATA CONTAINED IN THIS DOCUMENT IS PROPRIETARY TO TROMPETER ELECTRONICS INC. AND SHALL NOT BE DISCLOSED, DUPLICATED FOR PROCUREMENT OR MANUFACTURE WITHOUT EXPRESS WRITTEN PERMISSION.
.380 DIA TYP
.562 HEX NUT
.500-28UNEF-2A
.562 HEX
.046
.505 ±.030
1.280 ±.030
.221 .218
.510 .505 DIA
RECOMMENDED PANEL CUTOUT
SCALE: 2/1
QTY
DESCRIPTION
PART NUMBER
ITEM
TOL UNLESS SPECIFIED .XX ± .XXX ± .005 ANGLES ±
TROMPETER ELECTRONICS, INC.
BJ28/UBJ28
DWN AAH 2-22-91
MATERIAL
CODE IDENT
DRAWING NO.
REV
14949
1-0133
P
CHK
ENGR
APPR
SCALE 4/1
DATE 9/15/65
SHEET 1 OF 2
105-1043
155-0574
155-0538
155-0512
NEXT ASSY
Connector for Cable #1a
4. SOCKET CONTACT COAXIAL BNC TYPE INSULATED FEED THRU BULKHEAD JACK, 50 AND 75 OHM VERSIONS
3. MAX PANEL THK .156
2. FINISH: TFS-1A, (NICKEL)
1. ALL DIM ARE IN INCHES
DASH NO
MODEL NO
IMPD OHMS
-1 BJ28 50
-2 UBJ28 75
INCH MM
.005 0.13
.030 0.76
.046 1.17
.156 3.96
.218 5.54
.221 5.61
.380 9.65
.505 12.83
.510 12.95
.562 14.27
1.280 32.51

Figure A 2

817 867 4489

WIRE SPECIFICATION: 22/39/32

Components: Tinned copper shielded twisted pair with ETFE jacket.

Overall Shielding: Aluminum mylar wrap drain wire, and braided Vermalloy® 3948 shield.

Jacket: Braided polyester.

AIRBORNE CABLES

Lightweight Electric and Magnetic Field Protection Shielded Twisted Pair Components

Cable #2 of Table 1

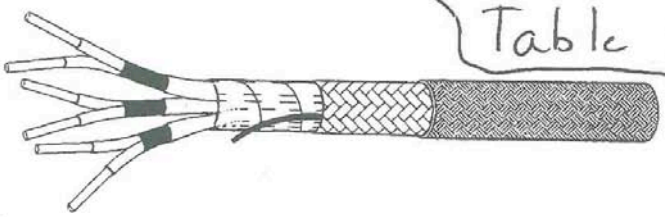

# twisted Pairs	P/N	Shield AWG	dia.	lbs/m				
2	20SB2X22-25	34	0.366	58.8	22SB2X22-25	34	0.334	49.8
3	20SB3X22-25	34	0.389	78.0	22SB3X22-25	34	0.355	65.5
4	20SB4X22-25	34	0.430	98.4	22SB4X22-25	34	0.391	82.3
5	20SB5X22-25	34	0.475	119.2	22SB5X22-25	34	0.431	99.5
6	20SB6X22-25	34	0.521	140.1	22SB6X22-25	34	0.473	116.7
7	20SB7X22-25	34	0.521	157.0	22SB7X22-25	34	0.473	130.4
8	20SB8X22-25	34	0.569	182.0	22SB8X22-25	34	0.516	151.0
9	20SB9X22-25	34	0.676	208.1	22SB9X22-25	34	0.612	172.9
10	20SB10X22-25	34	0.676	225.4	22SB10X22-25	34	0.612	186.9
11	20SB11X22-25	34	0.699	245.2	22SB11X22-25	34	0.633	203.1
12	20SB12X22-25	34	0.699	262.6	22SB12X22-25	34	0.633	217.2
13	20SB13X22-25	34	0.740	283.4	22SB13X22-25	34	0.669	234.3
14	20SB14X22-25	34	0.740	300.7	22SB14X22-25	34	0.669	248.3
15	20SB15X22-25	34	0.785	322.1	22SB15X22-25	34	0.709	266.0
16	20SB16X22-25	34	0.785	339.5	22SB16X22-25	34	0.709	280.1
17	20SB17X22-25	34	0.831	360.8	22SB17X22-25	34	0.751	297.7
18	20SB18X22-25	34	0.831	378.2	22SB18X22-25	34	0.751	311.8
19	20SB19X22-25	34	0.831	395.0	22SB19X22-25	34	0.751	325.4
20	20SB20X22-25	34	0.879	431.4	22SB20X22-25	34	0.794	355.0
25	20SB25X22-25	34	0.986	521.8	22SB25X22-25	34	0.890	428.9
30	20SB30X22-25	34	1.050	618.5	22SB30X22-25	34	0.947	508.1
35	20SB35X22-25	34	1.141	732.4	22SB35X22-25	34	1.029	601.0
40	20SB40X22-25	34	1.189	824.8	22SB40X22-25	34	1.072	676.2
45	20SB45X22-25	34	1.296	927.5	22SB45X22-25	34	1.168	760.2
50	20SB50X22-25	34	1.360	1,022.3	22SB50X22-25	34	1.225	837.5

NOTE: Wire specification and cable construction may be modified to meet any specific requirement.

VERMILLION INCORPORATED
CERTIFIED TO ISO 9001

4754 South Palisade, P.O. Box 12147 (67277), Wichita, Kansas 67217
Phone (316) 524-3100 Fax (316) 524-2011 www.vermillioninc.com

12-

SPECIFICATIONS

817 867 4489

FLANGE MOUNT RECEPTACLES

MIL-C-83723/ 82 & 83 Threaded Type

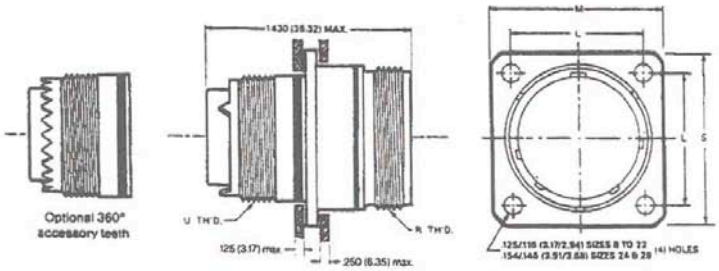

MIL-C-83723/ 71 & 72 Bayonet Type

SHELL SIZE 28 NOT AVAILABLE.

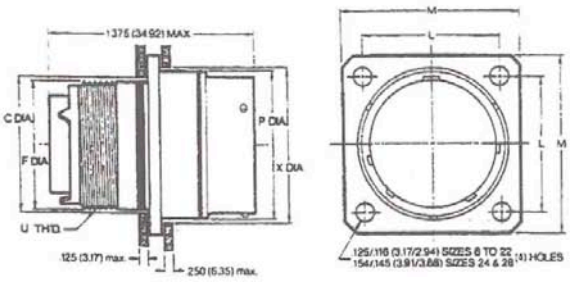

INCHES

Shell Size	U Th'd. Access End	R Th'd. Mating End	C Dia. Panel (Min.)	F Dia. Rear (Max.)	P Dia. Front (Max.)	X Dia. Panel (Min.)	L	M
08	.500-20	.562-24	.510	.500	.562	.620	.594	.812
10	.625-24	.688-24	.635	.625	.696	.748	.719	.937
12	.750-20	.875-20	.760	.750	.875	.913	.812	1.031
14	.875-20	.938-20	.885	.875	.936	.980	.906	1.125
16	1.000-20	1.062-18	1.010	1.000	1.062	1.107	.969	1.250
18	1.062-18	1.188-18	1.072	1.062	1.187	1.209	1.062	1.343
20	1.188-18	1.312-18	1.192	1.187	1.312	1.337	1.156	1.437
22	1.312-18	1.438-18	1.322	1.312	1.437	1.452	1.250	1.562
24	1.438-18	1.562-18	1.447	1.437	1.562	1.577	1.375	1.703
28	1.750-18	1.812-16	1.760	1.750	1.812	1.827	1.562	1.953

MILLIMETERS

Shell Size	C Dia. Panel (Min.)	F Dia. Rear (Max.)	P Dia. Front (Max.)	X Dia. Panel (Min.)	L	M
08	12.95	12.70	14.27	15.75	15.04	20.62
10	16.13	15.88	17.68	18.99	18.26	23.80
12	19.30	19.05	22.23	23.19	20.62	26.19
14	22.48	22.23	23.77	24.89	23.01	28.58
16	25.65	25.40	26.97	28.12	24.61	31.75
18	27.23	26.97	30.15	30.71	26.97	34.11
20	30.28	30.15	33.32	33.96	29.36	36.50
22	33.58	33.32	36.50	36.88	31.75	39.67
24	36.75	36.50	39.67	40.06	34.93	43.26
28	44.70	44.45	46.02	46.41	39.67	49.61

Connector for Cable #2

11

Figure A 3

INSERT ARRANGEME....

817 867 4489

Front Face of Pin Inserts Illustrated

*Non-Military Arrangement.

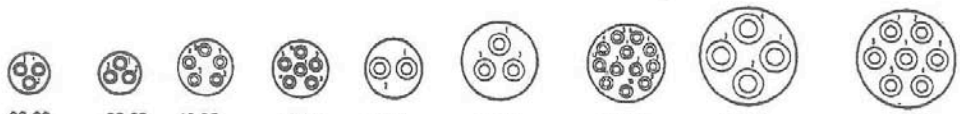

Insert arrangement	08-98	08-03	10-05	10-06	10-20	12-03	12-12	14-04	14-07
size of contacts	3 #20	3 #20	5 #20	6 #20	2 #16	3 #16	12 #20	4 #12	7 #16
service rating	I	I	I	I	I	I	I	I	I

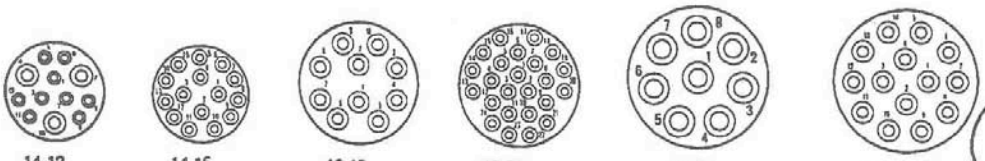

Insert arrangement	14-12	14-15	16-10	16-24	18-08	18-14
size of contacts	9 #20, 3 #16	15 #20	10 #16	24 #20	8 #12	14 #16
service rating	I	I	I	I	I	I

Connect for Cabl

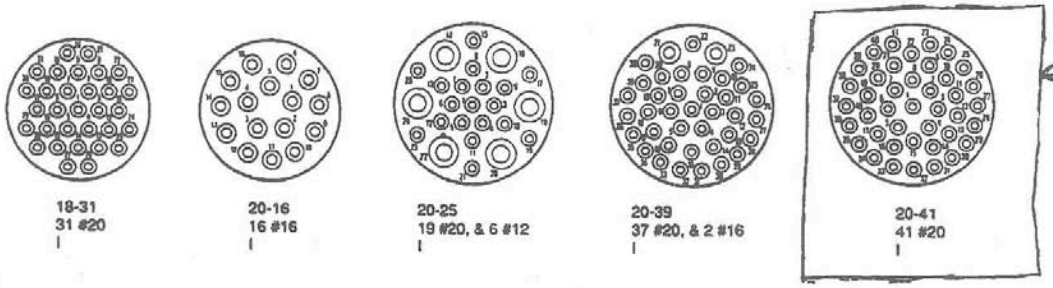

Insert arrangement	18-31	20-16	20-25	20-39	20-41
size of contacts	31 #20	16 #16	19 #20, & 6 #12	37 #20, & 2 #16	41 #20
service rating	I	I	I	I	I

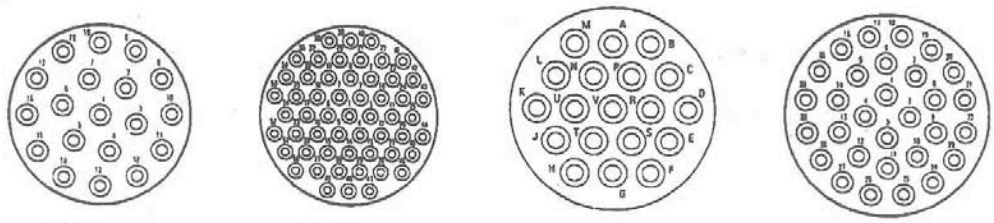

Insert arrangement	22-19	22-55	24-19	24-30*
size of contacts	19 #16	55 #20	19 #12	30 #16
service rating	I	I	I	I

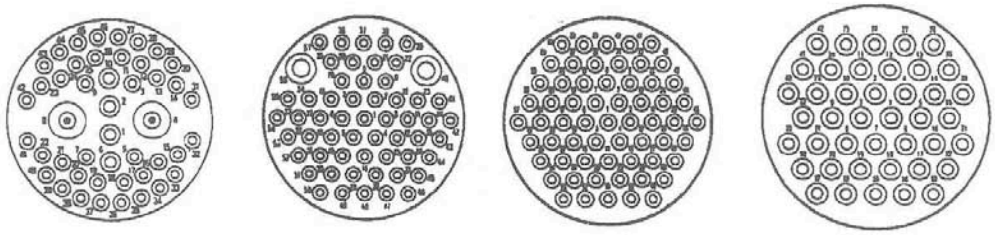

Insert arrangement	24-46*	24-57	24-61	28-42*
size of contacts	40 #20, 4 #16, 2 #8 Twinax △	55 #20, & 2 #12	61 #20	42 #16
service rating	I	I	I	I

△ Grounded to shell

SERVICE RATING

Service Rating	Test Voltage (Sea Level)	Test Voltage 50,000 Ft.	Test Voltage 70,000 Ft.	Test Voltage 110,000 Ft.
I	1500 AC-RMS	500 AC-RMS	375 AC-RMS	200 AC-RMS

Please note that the establishment of electrical safety factors is left entirely in the designer's hands, since he is in the best position to know what peak voltages, switching surges, transients, etc. can be expected in a particular circuit.

Cable #3 of Table 1

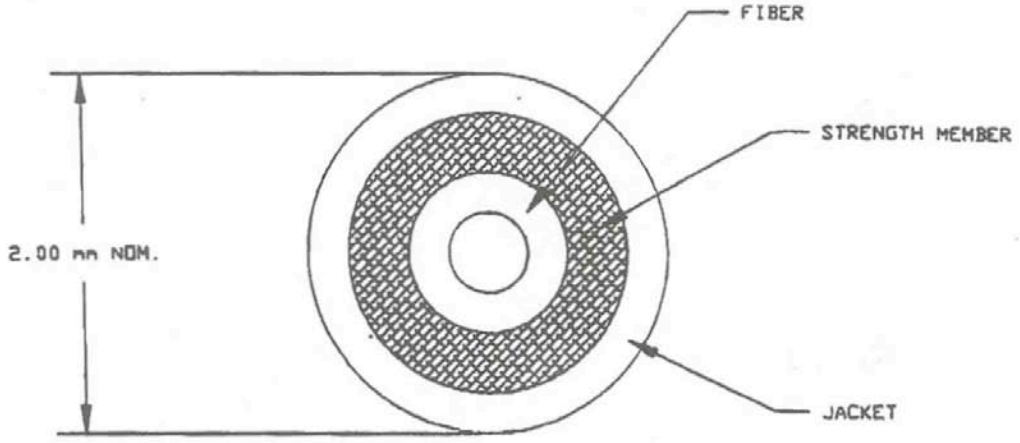

FIBER: COMPLIES WITH REQUIREMENTS AS SPECIFIED IN MIL-F-49291/6

CORE	62.5um ±3um
CLADDING	125um ±1um
PRIMARY BUFFER	250um ±15um (RAD HARD)
SECONDARY BUFFER	900um ±50um
ATTENUATION @ 0.85um	<4.5dB/km
ATTENUATION @ 1.3um	<2.0dB/km
BANDWIDTH @1.3um	>500 MHz-km
NUMERICAL APERTURE	0.275 ±0.015
PROOF TEST	100 kpsi
INDEX PROFILE	GRADED

STRENGTH MEMBER: ARAMID YARN LONGITUDINALLY APPLIED.

JACKET: ZERO HALOGEN, LOW SMOKE THERMOPLASTIC

O.D.: 2.0 mm ± 0.2 mm (0.078 in. ± 0.008 in.)

REQUIREMENTS: MFG. IN ACCORDANCE WITH MIL-C-85045E/16

BRAND-REX PART NUMBER: OC-1468

REVISIONS		
0	02/04/94	FIRST ISSUE
1	06/02/94	COMPLIES TO MIL-F-49291/6
2	06/13/94	PART NUMBER

REFERENCES: MIL-C-85045E/16

BRAND-REX COMPANY
Leadership Through Cable Technology
1600 West Main Street
Willimantic, CT 06226-1128

G493 62.5/125 RAD HARD SINGLE FIBER UNIT

DRAWN BY: WALT DRABEK APPROVED BY: RB

THIS DRAWING IS THE PROPERTY OF THE BRAND-REX COMPANY AND SHALL NOT BE REPRODUCED, COPIED, OR USED AS THE BASIS FOR THE MANUFACTURE OR SALE OF THIS DESIGN WITHOUT THE PERMISSION OF THE BRAND-REX COMPANY

APR-20-2000 13:40 8604507004

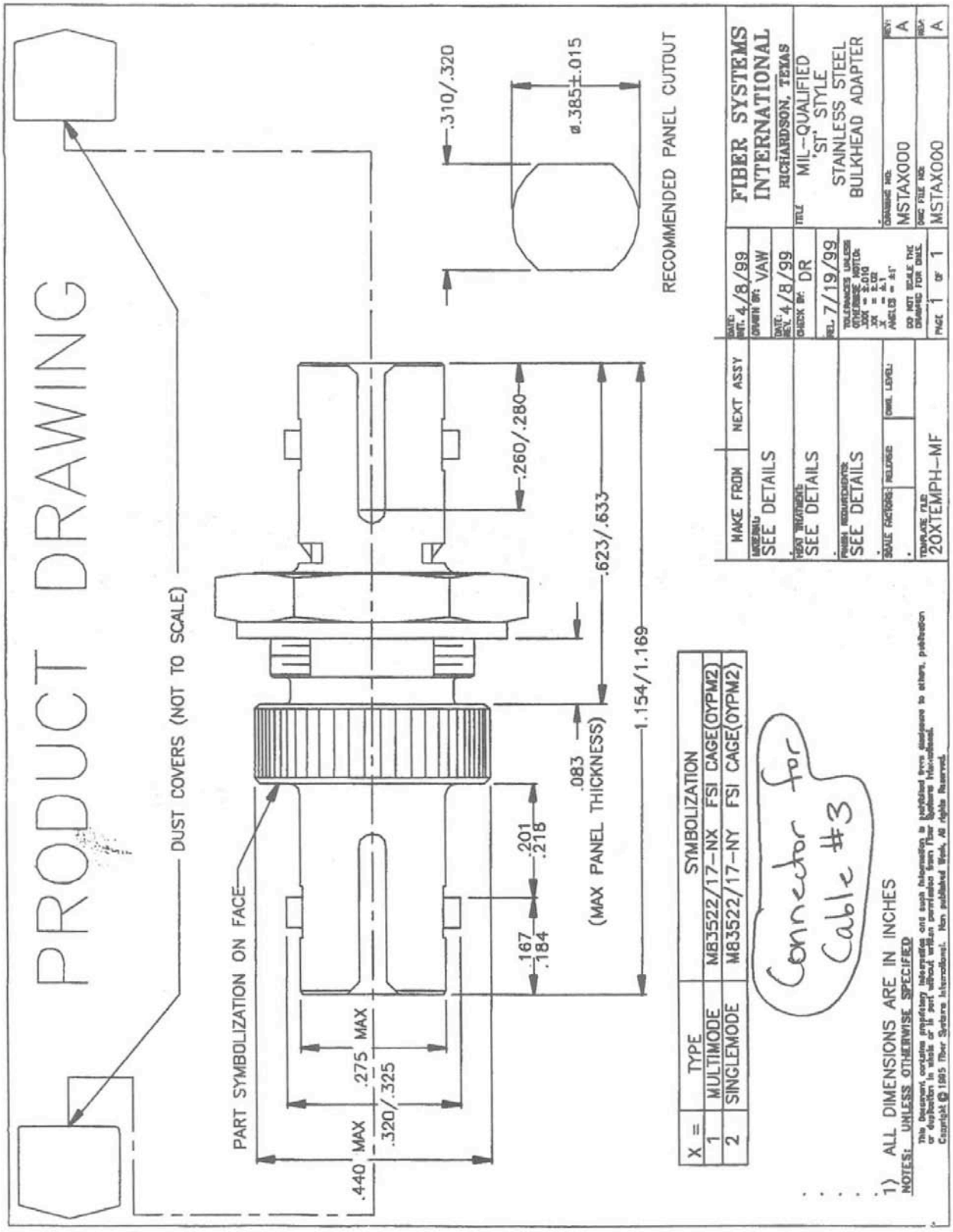
PRODUCT DRAWING
DUST COVERS (NOT TO SCALE)
PART SYMBOLIZATION ON FACE
.440 MAX
.275 MAX
.320/.325
.167
.184
.201
.218
.083
(MAX PANEL THICKNESS)
.260/.280
.623/.633
1.154/1.169
.310/.320
ø.385±.015
RECOMMENDED PANEL CUTOUT
FIBER SYSTEMS INTERNATIONAL
RICHARDSON, TEXAS
MIL-QUALIFIED 'ST' STYLE STAINLESS STEEL BULKHEAD ADAPTER
MSTAX000
MAKE FROM
NEXT ASSY
SEE DETAILS
VAW
DR
7/19/99
20XTEMPH-MF
SYMBOLIZATION
X = TYPE
1 MULTIMODE M83522/17-NX FSI CAGE(OYPM2)
2 SINGLEMODE M83522/17-NY FSI CAGE(OYPM2)
Connector for Cable #3
1) ALL DIMENSIONS ARE IN INCHES
NOTES: UNLESS OTHERWISE SPECIFIED

Figure A 4

817 867 4489

WIRE SPECIFICATION: 22/37/32

Components: Tinned copper shielded twisted pair with ETFE jacket.

Overall Shielding: Aluminum mylar wrap drain wire, and braided Vermalloy® 3948 shield.

Jacket: Braided polyester.

AIRBORNE CABLES

Lightweight Electric and Magnetic Field Protection Shielded Twisted Pair Components

Cable #4 of Table 1

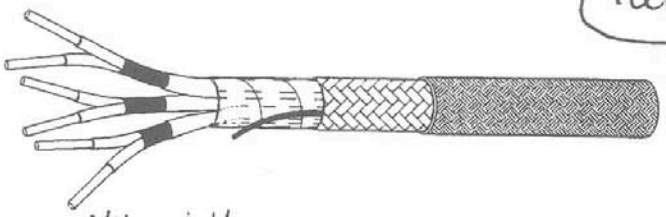

# twisted Pairs	P/N ↓	shield AWG	dia.	lbs/m				
2	20SB2X22-25	34	0.366	58.8	22SB2X22-25	34	0.334	49.8
3	20SB3X22-25	34	0.389	78.0	22SB3X22-25	34	0.355	65.5
4	20SB4X22-25	34	0.430	98.4	22SB4X22-25	34	0.391	82.3
5	20SB5X22-25	34	0.475	119.2	22SB5X22-25	34	0.431	99.5
6	20SB6X22-25	34	0.521	140.1	22SB6X22-25	34	0.473	116.7
7	20SB7X22-25	34	0.521	157.0	22SB7X22-25	34	0.473	130.4
8	20SB8X22-25	34	0.569	182.0	22SB8X22-25	34	0.516	151.0
9	20SB9X22-25	34	0.676	208.1	22SB9X22-25	34	0.612	172.9
10	20SB10X22-25	34	0.676	225.4	22SB10X22-25	34	0.612	186.9
11	20SB11X22-25	34	0.699	245.2	22SB11X22-25	34	0.633	203.1
12	20SB12X22-25	34	0.699	262.6	22SB12X22-25	34	0.633	217.2
13	20SB13X22-25	34	0.740	283.4	22SB13X22-25	34	0.669	234.3
14	20SB14X22-25	34	0.740	300.7	22SB14X22-25	34	0.669	248.3
15	20SB15X22-25	34	0.785	322.1	22SB15X22-25	34	0.709	266.0
16	20SB16X22-25	34	0.785	339.5	22SB16X22-25	34	0.709	280.1
17	20SB17X22-25	34	0.831	360.8	22SB17X22-25	34	0.751	297.7
18	20SB18X22-25	34	0.831	378.2	22SB18X22-25	34	0.751	311.8
19	20SB19X22-25	34	0.831	395.0	22SB19X22-25	34	0.751	325.4
20	20SB20X22-25	34	0.879	431.4	22SB20X22-25	34	0.794	355.0
25	20SB25X22-25	34	0.986	521.8	22SB25X22-25	34	0.890	428.9
30	20SB30X22-25	34	1.050	618.5	22SB30X22-25	34	0.947	508.1
35	20SB35X22-25	34	1.141	732.4	22SB35X22-25	34	1.029	601.0
40	20SB40X22-25	34	1.189	824.8	22SB40X22-25	34	1.072	676.2
45	20SB45X22-25	34	1.296	927.5	22SB45X22-25	34	1.168	760.2
50	20SB50X22-25	34	1.360	1,022.3	22SB50X22-25	34	1.225	837.5

NOTE: Wire specification and cable construction may be modified to meet any specific requirement.

VERMILLION INCORPORATED
CERTIFIED TO ISO 9001

4754 South Palisade, P.O. Box 12147 (67277), Wichita, Kansas 67217
Phone (316) 524-3100 Fax (316) 524-2011 www.vermillioninc.com

12-:

SPECIFICATIONS 817 867 4489

FLANGE MOUNT RECEPTACLES

MIL-C-83723/ 82 & 83 Threaded Type

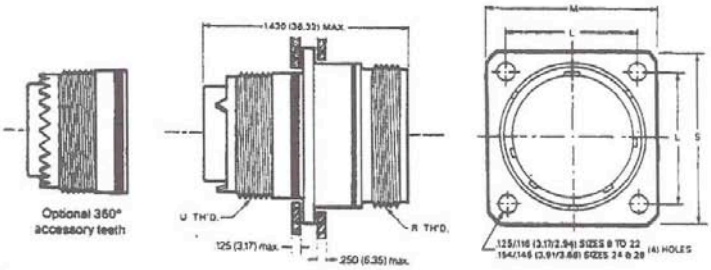

MIL-C-83723/ 71 & 72 Bayonet Type

SHELL SIZE 28 NOT AVAILABLE.

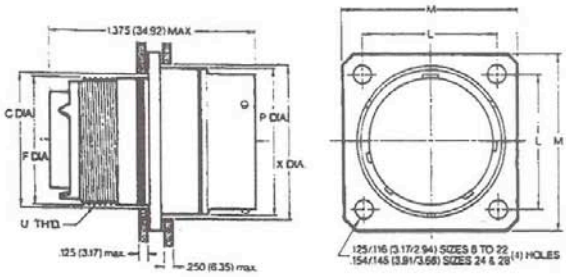

INCHES

Shell Size	U Th'd. Access End	R Th'd. Mating End	C Dia. Panel (Min.)	F Dia. Rear (Max.)	P Dia. Front (Max.)	X Dia. Panel (Min.)	L	M
08	.500-20	.562-24	.510	.500	.562	.620	.594	.812
10	.625-24	.688-24	.635	.625	.696	.748	.719	.937
12	.750-20	.875-20	.760	.750	.875	.913	.812	1.031
14	.875-20	.938-20	.885	.875	.936	.980	.906	1.125
16	1.000-20	1.062-18	1.010	1.000	1.062	1.107	.969	1.250
18	1.062-18	1.188-18	1.072	1.062	1.187	1.209	1.062	1.343
20	1.188-18	1.312-18	1.192	1.187	1.312	1.337	1.156	1.437
22	1.312-18	1.438-18	1.322	1.312	1.437	1.452	1.250	1.562
24	1.438-18	1.562-18	1.447	1.437	1.562	1.577	1.375	1.703
28	1.750-18	1.812-16	1.760	1.750	1.812	1.827	1.562	1.953

MILLIMETERS

Shell Size	C Dia. Panel (Min.)	F Dia. Rear (Max.)	P Dia. Front (Max.)	X Dia. Panel (Min.)	L	M
08	12.95	12.70	14.27	15.75	15.04	20.62
10	16.13	15.88	17.68	18.99	18.26	23.80
12	19.30	19.05	22.23	23.19	20.62	26.19
14	22.48	22.23	23.77	24.89	23.01	28.58
16	25.65	25.40	26.97	28.12	24.61	31.75
18	27.23	26.97	30.15	30.71	26.97	34.11
20	30.28	30.15	33.32	33.96	29.36	36.50
22	33.58	33.32	36.50	36.88	31.75	39.67
24	36.75	36.50	39.67	40.06	34.93	43.26
28	44.70	44.45	46.02	46.41	39.67	49.61

Connector for Cable #4

11

Figure A 5

INSERT ARRANGEME....

817 867 4489

Front Face of Pin Inserts Illustrated

*Non-Military Arrangement.

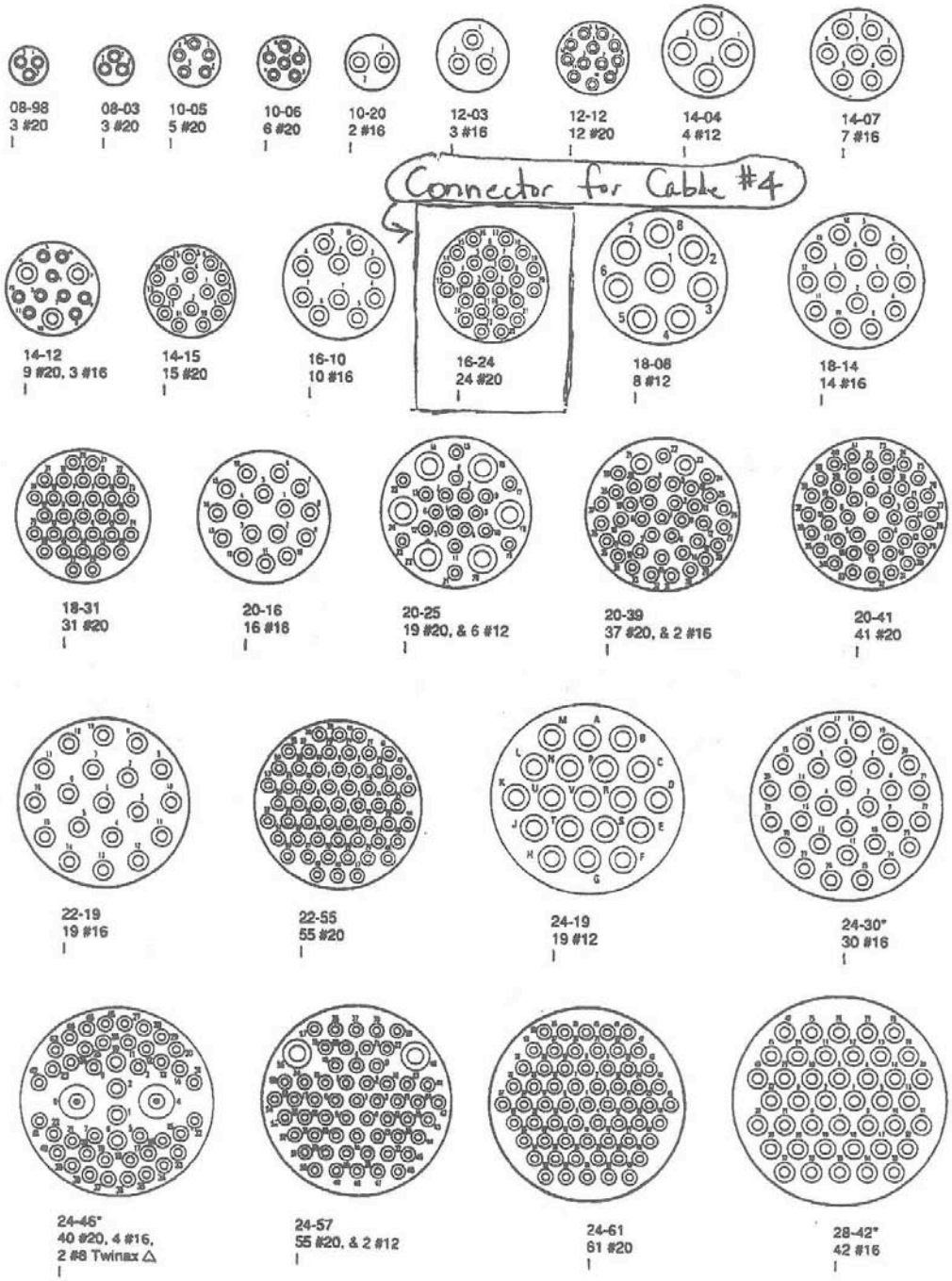

△ Grounded to shell

SERVICE RATING

Service Rating	Test Voltage (Sea Level)	Test Voltage 50,000 Ft.	Test Voltage 70,000 Ft.	Test Voltage 110,000 Ft.
I	1500 AC-RMS	500 AC-RMS	375 AC-RMS	200 AC-RMS

Please note that the establishment of electrical safety factors is left entirely in the designer's hands, since he is in the best position to know what peak voltages, switching surges, transients, etc. can be expected in a particular circuit.

REV. STATUS	REV.LTR.	-				REVISIONS			
SHEETS	SHEET NO	1				LTR	DESCRIPTION	DATE	BY
						-	Released	12/07/99	JCL

I. CONSTRUCTION

	DIAMETER
Center Conductor: 7 Strand Bare Copper	.034"
Dielectric: Gas Injected Foam Polyethylene	.150"
Shield: Bonded Aluminum-Polyester-Aluminum Tape	.155"
36 GA Tinned Copper Braid(90%k)	.178"
Jacket: Black Low Smoke Low Toxicity Zero Halogen Polyolefin	.240"

Cable #6 of Table 1

II. ENVIRONMENTAL AND MECHANICAL PROPERTIES

Weight: 42 lbs per 1000 feet
Operating Temperature: -40°C to +85°C
Minimum Bend Radius: 3/4"
Flammability: Meets IEC 332-1 and -3 requirements.
Meets FAR Part 25, Par. 25.853B and/or 25.1359(d)
Smoke Emission: Meets IEC 1034-1 requirements.
Conforms to NES 711 maximum smoke index test.
Toxic Fume Emission: Meets NES 713 maximum toxicity index value requirements.
Acid Gas Generation: Meets IEC 754-1 requirements.
Passes MIL-C-17G maximum acid gas requirements.

III. ELECTRICAL PROPERTIES

Impedance: 75 ohms
Capacitance: 16.0 pF per foot
Velocity: 84%

Attenuation @ 10 MHz:	0.98 dB per 100 feet
100 MHz:	3.13 dB per 100 feet
1000 MHz:	10.06 dB per 100 feet
DC Resistance - Center Conductor:	12.2 Ohms per 1000 feet

VSWR: 1.35:1 max. from 10 MHz to 1000 MHz

IV. CABLE MARKING: "TIMES MICROWAVE LMR-240-75-ULTRAFLEX-FR - COMMUNICATIONS - CCTV - LSOH - LUL"

V. NOTES

1) All tests performed in accordance with MIL-C-17(current issue).

Unless otherwise specified dimensions in inches. Tolerances are applicable when specified.	Approvals			TIMES MICROWAVE SYSTEMS Wallingford, CT 06492		
	Drawn	JCL	12/07/99	LMR-240-75-Ultraflex-FR Flame Retardant - High Performance Air Frame Communications Coax		
	Check					
	PrjMg			Size A	Code Ident 68999	Dwg.No. AA - 8934
	PrdMg					
MI 54083	QAMgr			Scale: NA	Rev. (-)	Sheet: 1 of 1

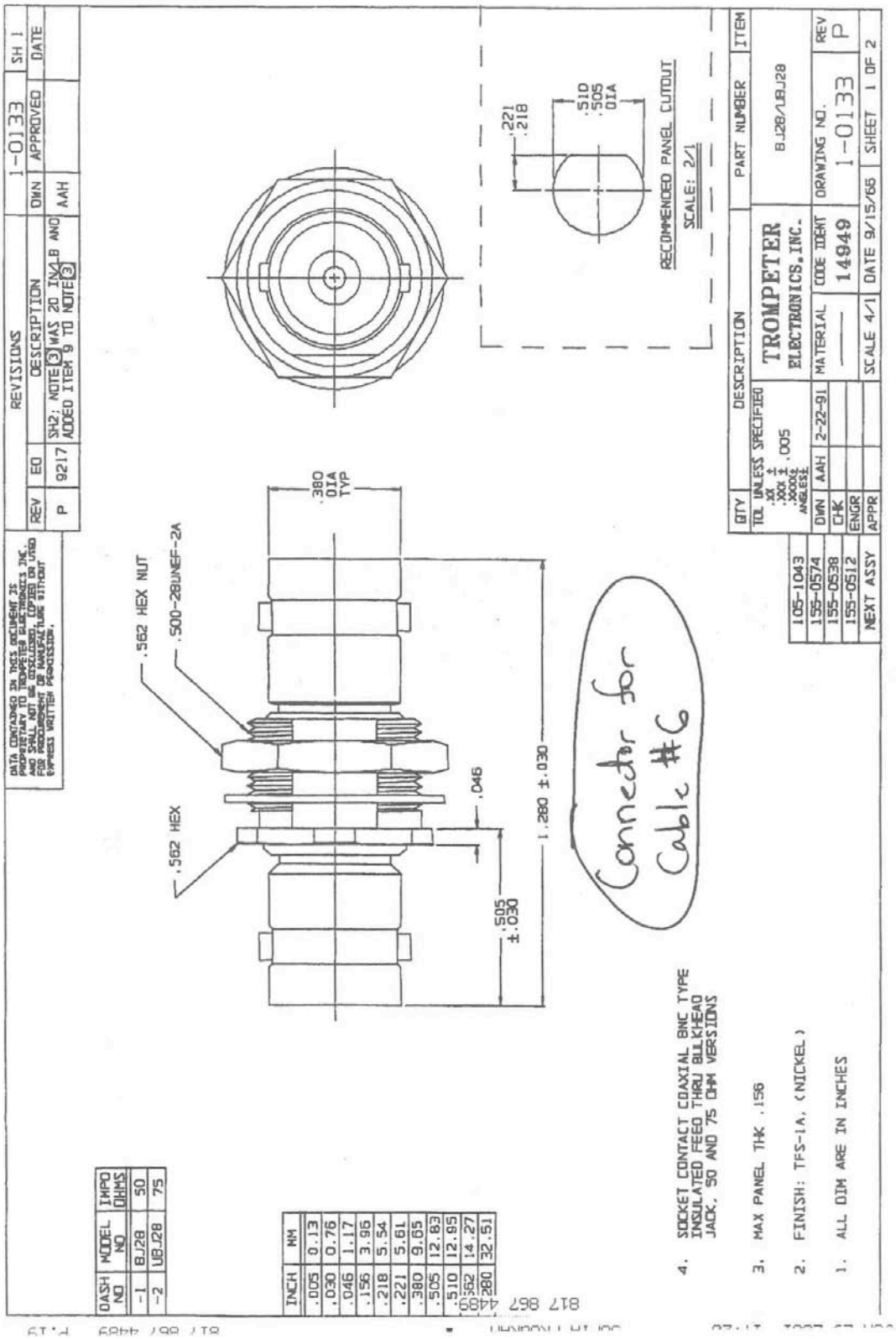
REVISIONS
REV
EO
DESCRIPTION
DWN
APPROVED
DATE
P
9217
SH2; NOTE 3 WAS 20 IN 4B AND ADDED ITEM 9 TO NOTE 3
AAH
1-0133
SH 1
DATA CONTAINED IN THIS DOCUMENT IS PROPRIETARY TO TROMPETER ELECTRONICS INC. AND SHALL NOT BE DISCLOSED, COPIED OR USED FOR PROCUREMENT OR MANUFACTURE WITHOUT EXPRESS WRITTEN PERMISSION.
.562 HEX NUT
.500-28UNEF-2A
.562 HEX
.380 DIA TYP
.046
.505 ±.030
1.280 ±.030
.221 .218
.510 .505 DIA
RECOMMENDED PANEL CUTOUT
SCALE: 2/1
Connector for Cable #6
QTY
DESCRIPTION
PART NUMBER
ITEM
TOL UNLESS SPECIFIED .XX ± .005 .XXX ± .005 .XXXX ANGLES±
TROMPETER ELECTRONICS, INC.
BJ28/UBJ28
105-1043
155-0574
155-0538
155-0512
NEXT ASSY
DWN
AAH
2-22-91
CHK
ENGR
APPR
MATERIAL
CODE IDENT
14949
DRAWING NO.
1-0133
REV
P
SCALE 4/1
DATE 9/15/65
SHEET 1 OF 2
DASH NO
MODEL NO
IMPED OHMS
-1
BJ28
50
-2
UBJ28
75
INCH
MM
.005 0.13
.030 0.76
.046 1.17
.156 3.96
.218 5.54
.221 5.61
.380 9.65
.505 12.83
.510 12.95
.562 14.27
.280 32.51
4. SOCKET CONTACT COAXIAL BNC TYPE INSULATED FEED THRU BULKHEAD JACK, 50 AND 75 OHM VERSIONS
3. MAX PANEL THK .156
2. FINISH: TFS-1A, (NICKEL)
1. ALL DIM ARE IN INCHES

Figure A 6

817 867 4489

REV	DESCRIPTION	DATE	APPROVED
A	SEE ECN 2190	12/12/94	TDM
B	SEE ECN 4105	6/26/96	JBH
C	ECN 12755, CORRECT CONDUCTOR STRANDING	11/15/00	

SHEET 1

DWG. NO. 322001-C

Trompeter: PL75C-306

CONSTRUCTION

Conductor: 20 AWG x 19/32 annealed silver plated copper; .037 O.D. nominal;
Dielectric: Solid PTFE; .116 O.D. nominal;
Inner Shield: 36 AWG silver plated copper braid; 90% coverage;
Inner Jacket: Tan FEP; .176 O.D. nominal;
Outer Shield: 36 AWG silver plated copper braid; 90% coverage;
Outer Jacket: Clear FEP; .236 O.D. nominal;

CHARACTERISTICS

Impedance: 50 Ohms nominal;
Capacitance: 29.5 pF/ft nominal;
Velocity of Propogation: 69.5% nominal;
Attenuation: 3.9 dB/100ft nominal @ 100 MHz;
8.0 dB/100ft nominal @ 400 MHz;
13.0 dB/100ft nominal @ 1000 MHz;
Bend radius: 1.2 in. nominal
Weight: 5.7 lbs./100 ft. nominal
Temperature range: −55° to +200° C.
Skydrol Resistant

ECS avionic cables meet or exceed burn/smoke requirements as set forth by Federal Aviation Regulations Part 25. In addition, they are designed and manufactured with materials which, when subjected to flames or high temperatures, will not outgas corrosive and toxic hydrogen chloride produced by conventional PVC cables.

Cable #7 of Table 1

NOTES: All dimensions in inches.

APPROVALS		DATE
DRAWN BY	JB HACKETT	11/10/92
CHECKED BY	TD MEYERS	11/16/92
APPROVED BY	TC KNUTSON	11/17/92

ELECTRONIC CABLE SPECIALISTS
FRANKLIN, WI 53132
PHONE: (414) 421-5500

TITLE
CUSTOMER SPECIFICATION
50 OHM TRIAXIAL CABLE

SIZE	CAGE CODE	LEVEL	PART NO.	REV.
A	66197		322001	C

SCALE 4/1 SHEET 1 OF 1

MARTY WOLFE

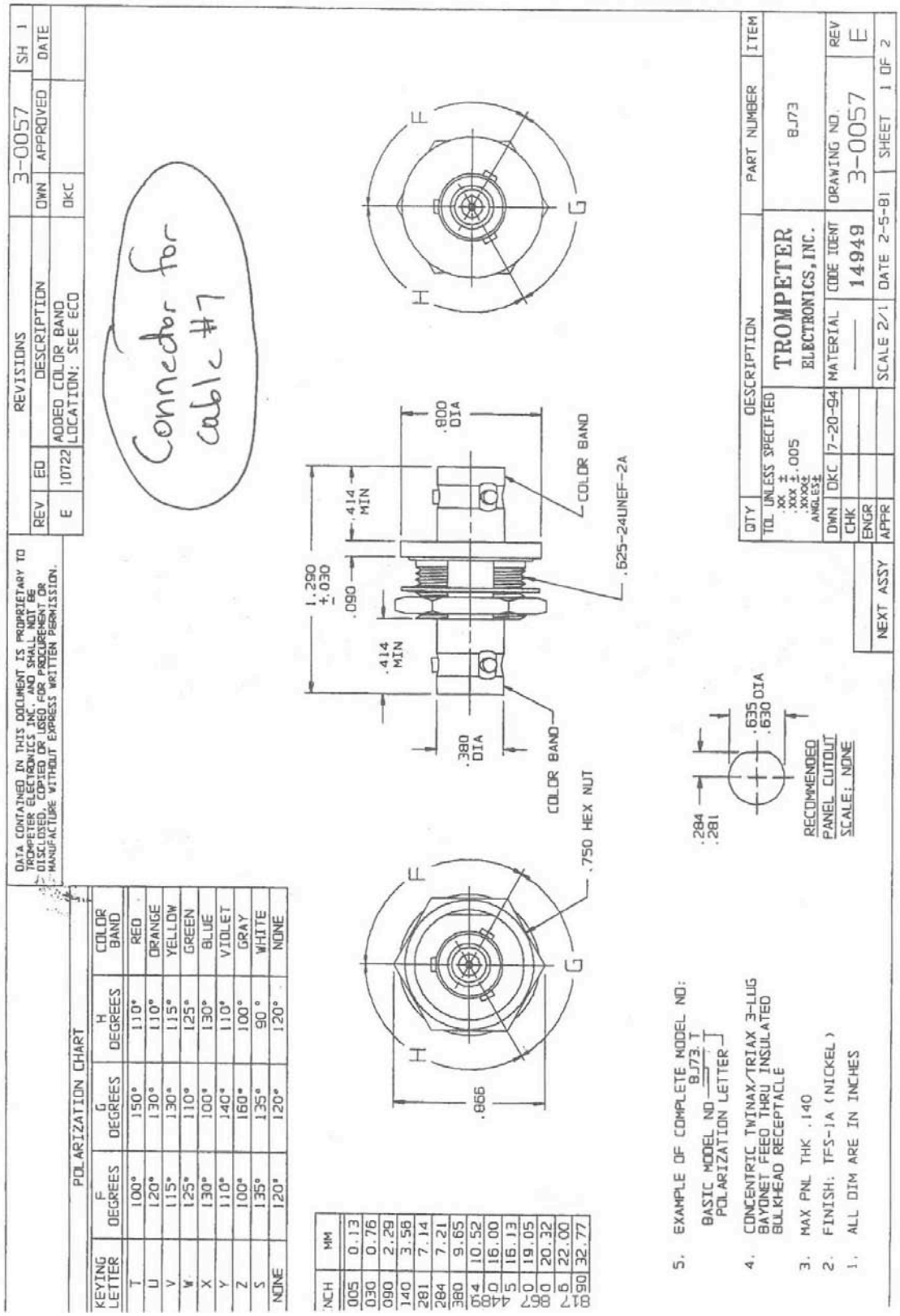
REVISIONS
REV
ED
DESCRIPTION
E
10722
ADDED COLOR BAND LOCATION; SEE ECO
3-0057
SH 1
DWN
APPROVED
DATE
DKC
Connector for cable #7
DATA CONTAINED IN THIS DOCUMENT IS PROPRIETARY TO TROMPETER ELECTRONICS INC. AND SHALL NOT BE DISCLOSED, COPIED OR USED FOR PROCUREMENT OR MANUFACTURE WITHOUT EXPRESS WRITTEN PERMISSION.
POLARIZATION CHART
KEYING LETTER
F DEGREES
G DEGREES
H DEGREES
COLOR BAND
T 100° 150° 110° RED
U 120° 130° 110° ORANGE
V 115° 130° 115° YELLOW
W 125° 110° 125° GREEN
X 130° 100° 130° BLUE
Y 110° 140° 110° VIOLET
Z 100° 160° 100° GRAY
S 135° 135° 90° WHITE
NONE 120° 120° 120° NONE
INCH MM
.005 0.13
.030 0.76
.090 2.29
.140 3.56
.281 7.14
.284 7.21
.380 9.65
.414 10.52
.630 16.00
.635 16.13
.750 19.05
.800 20.32
.866 22.00
.890 32.77
1.290 ±.030
.090
.414 MIN
.414 MIN
.800 DIA
.380 DIA
COLOR BAND
COLOR BAND
.625-24UNEF-2A
.750 HEX NUT
.866
F
G
H
.284
.281
.635
.630 DIA
RECOMMENDED PANEL CUTOUT
SCALE: NONE
5. EXAMPLE OF COMPLETE MODEL NO:
BASIC MODEL NO BJ73-T
POLARIZATION LETTER
4. CONCENTRIC TWINAX/TRIAX 3-LUG BAYONET FEED THRU INSULATED BULKHEAD RECEPTACLE
3. MAX PNL THK .140
2. FINISH: TFS-1A (NICKEL)
1. ALL DIM ARE IN INCHES
QTY
DESCRIPTION
PART NUMBER
ITEM
TOL UNLESS SPECIFIED
.XX ±.005
.XXX
.XXXX
ANGLES±
TROMPETER ELECTRONICS, INC.
BJ73
DWN DKC 7-20-94
MATERIAL
CODE IDENT
DRAWING NO.
REV
CHK
14949
3-0057
E
ENGR
SCALE 2/1
DATE 2-5-81
SHEET 1 OF 2
NEXT ASSY
APPR

Figure A 7

High Voltage Coaxial/Shielded Cable

CABLE #9 OR TABLE 1

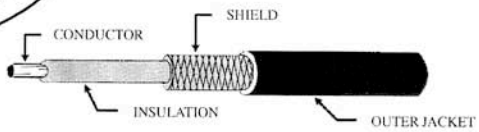

High Voltage Coaxial/ Shielded Cable

The coaxial and shielded cables shown below have been used in both military and industrial high voltage applications including Radar, ECM systems, power supplies and instrumentation. Many of the cables have controlled impedance. Figures for inductance and loop resistance (shield coupled to center conductor) are available upon request.

167-2669 and 178-8793 cables have controlled impedance, inductance and capacitance for fast response times and are used extensively to connect Exploding Bridgewire Detonators (EBW) to a Capacitor Discharge Unit (CDU).

Cable 178-5065 has foam insulation, giving lower capacitance and higher impedance. It has been used in cockpit displays.

Reynolds connectors are available for use with all cable types shown to complete your high voltage interconnection requirements.

High Voltage Coaxial/ Shielded Cable Attributes

OPERATING VOLTAGE (KVDC)	AWG	STRANDS	PLATING	CONDUCTOR Ø IN.	INSULATION MATERIAL & Ø IN.	SHIELDING AWG PLTG Ø IN.	JACKET MATERIAL Ø IN.	IMPED-ANCE OHMS	ATTEN. dB/100 FT @ 400 MHZ	CAP. pF/FT (Nom.) @ 1k HZ	PART NUMBER
600 v	30	7/38	SPC	.012	FEP .072	38 SPC .089	FEP .103	95	N/A	13.5	178-5065
18	26	19/38	SPC	.019	FEP .050	36 SPC .075	FEP .095	46	25	33.7	167-2896 [1]
20	16	19/29	TPC	.059	PE .118	36 TPC .150	PE .195	31	16	48	167-2669 [2]
22	22	19/34	SPC	.031	FEP .080	36 SPC .100	FEP .125	43	10.6	31	167-9346 [3]
25	22	19/34	SPC	.031	FEP .100	36 SPC .120	FEP .145	50	N/A	29.3	167-8726 [4]
40	20	19/32	TPC	.039	FEP .150	36 TPC .180	FEP .220	N/A	N/A	26	167-9785
40	20	19/32	SPC	.039	FEP .150	2 X 36 SPC .200	FEP .230	50	12.2	26	167-8556

Color: Type "L" cable jacket is white. Type "C" cable jacket is red.
All other cable jackets are black.
Ordering: Use Part Number and specify length in feet.

Note: Pre-conditioning of FEP wire or cable is recommended because FEP insulation will shrink when exposed to temperature cycling. Pre-conditioning should be conducted in an air circulating oven at 204°C (400°F) for one hour. Pre-conditioning should only be performed on cut lengths prior to stripping and any termination procedure. *No attempt should be made to condition wire or cable in bulk form or while spooled.*

[1] Type "L" cable
[2] Type "C" cable. High temperature version (up to 260° C) available on request
[3] Type .080 "L" Cable
[4] Type .100 "L" Cable

9

Figure A 8

RH 531

CABLE CONNECTORS

P/N 167-3554 • CABLE CONNECTOR (SEA LEVEL)

- Insulator: Kel-f
- Body: Brass
- Finish: Nickel Plate
- Contact: Beryllium Copper
- Braid Termination: Crimp
- Accommodates 'C' Cable (P/N 167-2669)
- For cable specification see page 32
- Production Test: 100% tested @ 15KVDC for 10 sec.

OBSOLETE

For replacement part order P/N 167-4535 (altitude version)

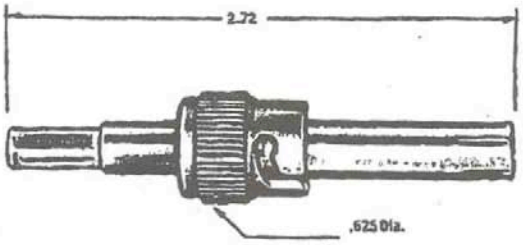

P/N 167-4535 • CABLE CONNECTOR (ALTITUDE)

- Insulator: Kel-f
- Body: Brass
- Finish: Nickel Plate
- Contact: Beryllium Copper
- Braid Termination: Crimp
- Accommodates 'C' Cable (P/N 167-2669)
- For cable specification see page 32
- Production Test: 100% tested @ 15KVDC for 10 sec. 2% lot tested at altitude to 31KVDC, 3 minutes min.
- Life Test: This connector has successfully completed 3000 hours @ 35,000 volts DC @ an altitude of 130,000 feet. For further information please contact Reynolds Engineering Dept.
- Voltage Rating: 10KVDC — unmated (sea level only)
  15KVDC — mated (any altitude)

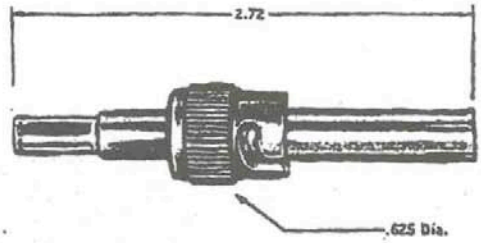

*Patent Pending

P/N 167-9096 • BULKHEAD MOUNT CABLE CONNECTOR (ALTITUDE)

- Insulator: KEL-F
- Body: Brass
- Finish: Silver Plate
- Contact: Brass
- Braid Termination: Crimp
- Accommodates "C" Cable (P/N 167-2669)
- For cable specification see page 32
- Production Test: 100% tested @ 15KVDC for 10 seconds. 2% lot tested at altitude to 21KVDC, 3 minutes, min.
- Voltage Rating: 10KVDC unmated (sea level only)
  15KVDC — mated (any altitude)

Connector for Cable # 9

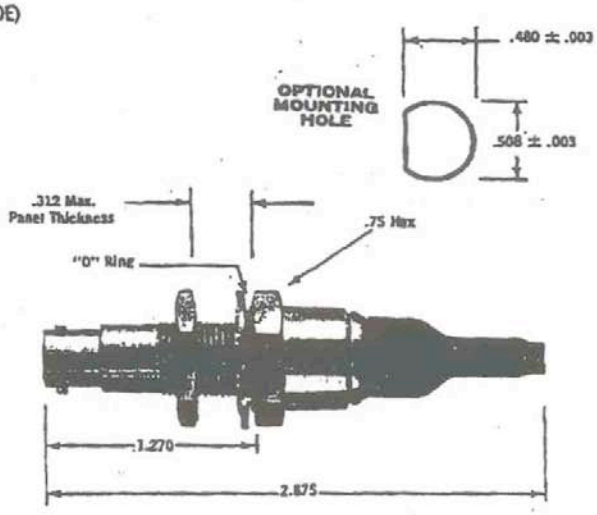

Patent No. 3,881,739

20

Figure A 9

Cable #10 Table 1 in TA_SI_01

Shielded twisted Pair (12 gauge) 110 volt/ 60 Hz power lines: M27500G12SD2T23

This follows the MIL –spec document:

APR 0 6 1998
33

INCH-POUND

MIL-DTL-27500H
10 December 1997
SUPERSEDING
MIL-C-27500G
23 FEB. 1990

DETAIL SPECIFICATION

CABLE, POWER, ELECTRICAL AND CABLE SPECIAL PURPOSE, ELECTRICAL SHIELDED AND UNSHIELDED, GENERAL SPECIFICATION FOR

This specification is approved for use by all Departments and Agencies of the Department of Defense.

MIL-DTL-27500H is a 33-page document.

Below is the explanation of the cable designation and references to subsections in MIL-DTL-27500H:

6.3 Cable designation. Cable will be identified by a combination of digits and letters (not to exceed 16), in accordance with tt following (see 3.3.1).

M27500	G	12	SD	2	T	23
Specification number (see 1.2.1.)	Identification method of cable wire and shield coverage (see 1.2.1.1.)	Conductor size (see 1.2.1.2)	Basic wire specification (see 1.2.1.3)	Number of wires in cable (see 1.2.1.4)	Shield style and material (see 1.2.1.5)	Jacket material (see 1.2.1.6)

This means
M27500G12SD2T23 = 12 AWG; one twisted pair (red and blue); tin-coated copper, stranded conductors; round, single shield; white XLETFE jacket; with wire specification MIL-W-22759/34

Figure A 10

INSERT ARRANGEME....

817 867 4489

Front Face of Pin Inserts Illustrated

Connector for Cable #10

*Non-Military Arrangement.

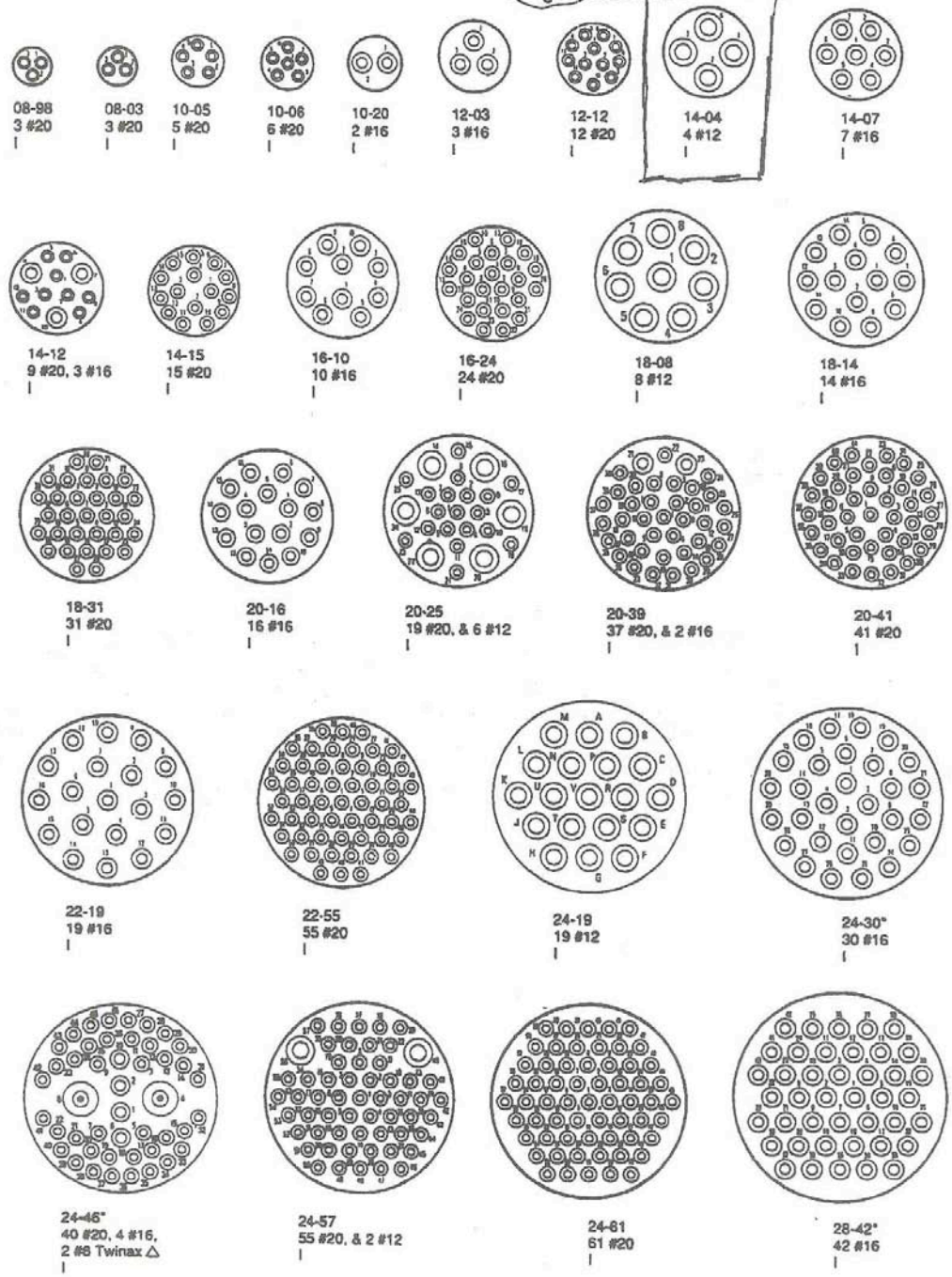

△ Grounded to shell

SERVICE RATING

Service Rating	Test Voltage (Sea Level)	Test Voltage 50,000 Ft.	Test Voltage 70,000 Ft.	Test Voltage 110,000 Ft.
I	1500 AC-RMS	500 AC-RMS	375 AC-RMS	200 AC-RMS

Please note that the establishment of electrical safety factors is left entirely in the designer's hands, since he is in the best position to know what peak voltages, switching surges, transients, etc. can be expected in a particular circuit.

SEP-20-2000 15:25 SOFIA PROGRAM 817 867 4489 817 867 4489 P.02

Teleflex INCORPORATED
fluid systems
A Division of Teleflex Incorporated (USA)

Full Vacuum Transfer Hose

CONVOLUTED

CONVOLUTED

Full Vacuum Resistance.
Temperature Range -65°F to 400°F (-54°C to 204°C).
Noncontaminating. Chemically Inert. Flexible. Corrsion-Proof. Versatile. Long Life. Meets FDA requirements.

Teleflex full vacuum convoluted Teflon* transfer hose effectively combines flexibility of application with corrosion resistance, long-term durability, full vacuum resistance and chemical inertness. This hose can also be found in hundreds of diverse chemical transfers, food handling, and various processing applications, from pure water to hazardous waste. It is eminently well suited for a wide variety of in-plant uses such as: loading and unloading, batch and bulk transfer, decanting vessels and drums, as well as meeting highly specialized, "one-of-a-kind" requirements.

Teleflex full vacuum hose can be your "almost universal" answer for all your chemical loading and unloading of trucks, tank cars, barges and process vehicles.

Economically Attractive
The cost-effectiveness of this multi-purpose hose suggests substitution in a wide variety of applications presently utilizing nylon, rubber, metal hose or solid piping and tubing.

Exceptionally Versatile
This performance-proven combination blends a white, helical, convoluted Teflon inner tubing with a reinforced stainless steel braid and a spiral wire beneath the braid to add vacuum strength. Our T1569HV Series incorporates a conductive inner tube to dissipate electrostatic charges — an important factor during fuel handling and steam service. Both white and black innercore are resistant to almost all fluids.

Anticorrosion Construction
The latest braiding technology and material processing techniques ensure the integrity of your entire transfer system. Manufactured in an exclusive Teleflex quality controlled process, the flanges and fittings are engineered to ensure contamination-free transfer. High pressure ratings and low elongation provide an exceptional measure of personal safety and process purity protection.

Teleflex full vacuum convoluted Teflon transfer hose is especially good for any application where a flexible connection or vibration elimination is required.

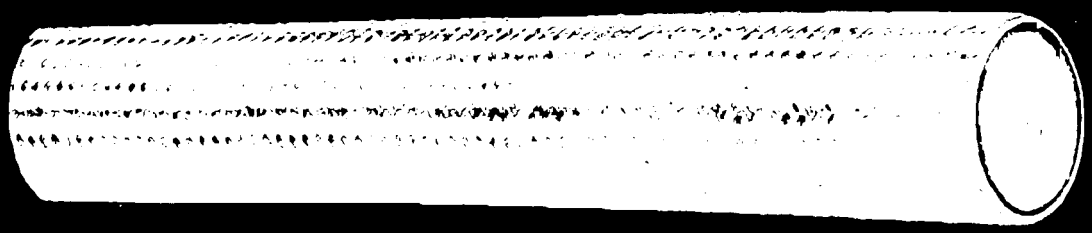

Full Vacuum Hose

Nominal ID In	Nominal ID MM	Nominal OD In	Nominal OD MM	Operating Pressure PSI	Operating Pressure Bar	Burst Pressure PSI	Burst Pressure Bar	Bend Radius In	Bend Radius MM	Weight Lbs/Ft Kg/M	Hose Number White	Hose Number Conductive
1½	38.10			750	52			7.5	190.5		T1568-24HV	
2	50.80			500	34			10	254.0		T1568-32HV	
3	76.20			250	17			15	381.0		T1568-48HV	
4	101.60			150	10			24	609.6		T1568-64HV	

SEP.25.2000 11:13AM TELEFLEX AERO HOSE NO.826 P.3

Medium Pressure Convoluted Hose of teflon*

Teleflex

FULL VACUUM CONVOLUTED TRANSFER HOSE

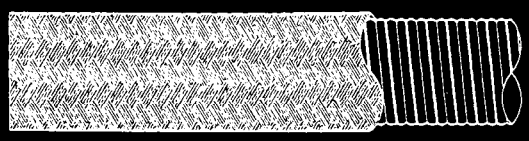

T1568 HV - non-conductive, PTFE lined, fiberglass reinforced innercore, spiral wire wrapped, overbraided with 300 series stainless steel.

T1569 HV - conductive (carbon impregnated), PTFE lined, fiberglass reinforced innercore, spiral wire wrapped, overbraided with 300 series stainless steel.

T1568 HV, T1569 HV

Hose Number White	Hose Number Conductive	Nominal I.D. In	Nominal O.D. In	Operating Pressure PSI	Burst Pressure PSI	Bend Radius In	Weight Lbs/Ft
T1568-24HV	T1569-24HV	1 1/2	1.85	750	3000	7.5	.89
T1568-32HV	T1569-32HV	2	2.42	500	2000	10	1.19
T1568-48HV	T1569-48HV						2.30
T1568-64HV	T1569-64HV						3.50

*A DuPont Registered Trademark

TA-SI-01 Cable list update
Vacuum & Blower hose
#11/11a
T1568-24HV
MGS 12Jan01

SEP-25-2000 15:26 SOFIA PROGRAM 817 867 4489 817 867 4489 P.04

Teleflex fluid systems

VACUUM RATINGS

The vacuum ratings for convoluted and smooth bore hose are as follows. Full vacuum is considered to be 28.

	INCHES OF Hg
T1568/T1569	
-08	28
-12	28
-16	25
-20	20
-24	12
-32	5
T1568HV/T1569HV	
-24	28
-32	28
-48	28
-64	28
T1167	
-03	28
-04	28
-05	28
-06	28
-08	28
-10	28
-12	20
-16	14

Keep in mind that these factors may change if the minimum bend radius and maximum temperatures are reached.

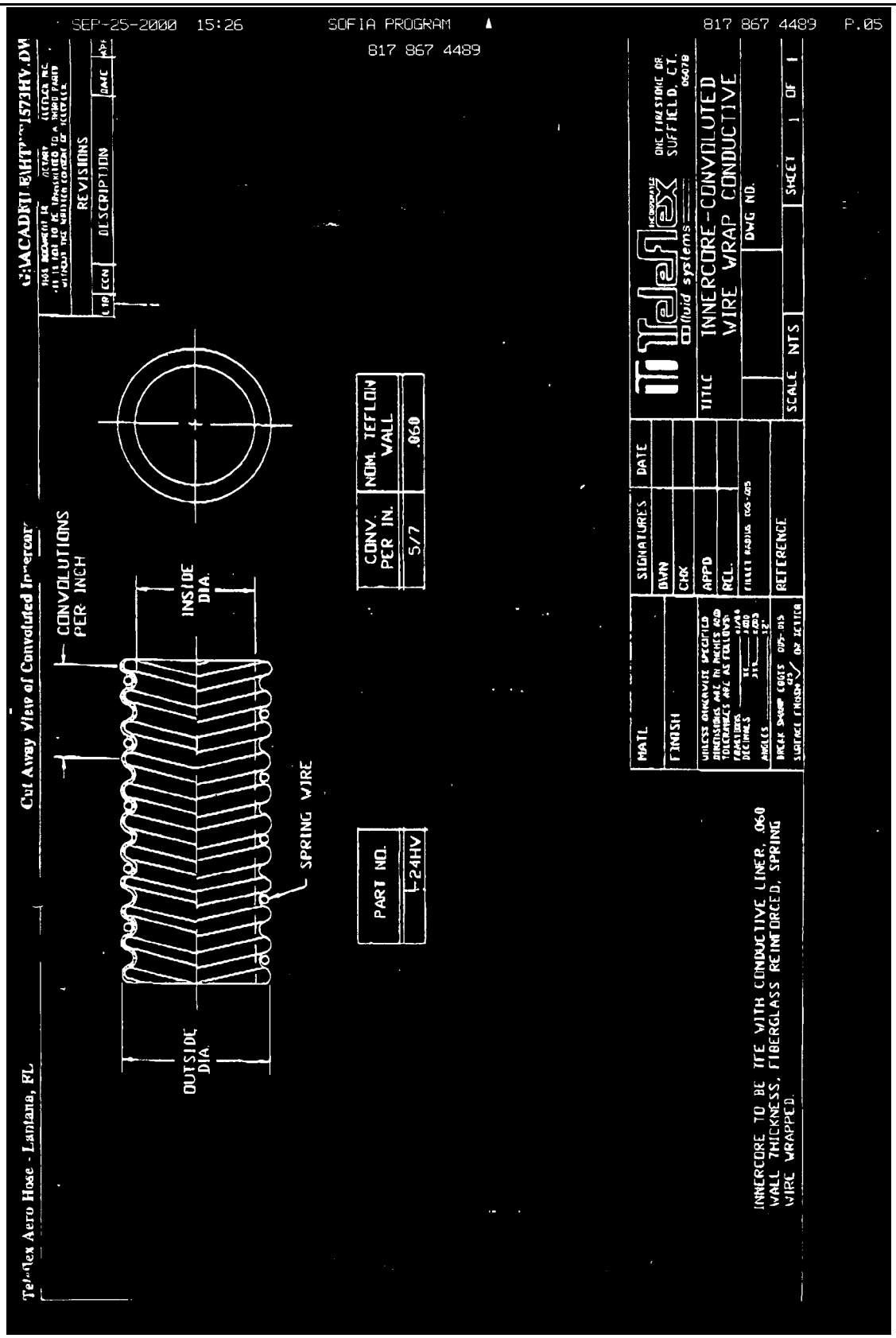
SEP-25-2000 15:26
SOFIA PROGRAM
817 867 4489
817 867 4489 P.05
REVISIONS
DESCRIPTION
Cut Away View of Convoluted Innercore
CONVOLUTIONS PER INCH
INSIDE DIA.
OUTSIDE DIA.
SPRING WIRE
CONV. PER IN.
5/7
NOM. TEFLON WALL
.060
PART NO.
L-24HV
SIGNATURES
DATE
DWN
CHK
APPD
RCL
MATL
FINISH
REFERENCE
TITLE
INNERCORE-CONVOLUTED WIRE WRAP CONDUCTIVE
DWG NO.
SCALE NTS
SHEET 1 OF 1
INNERCORE TO BE TFE WITH CONDUCTIVE LINER, .060 WALL THICKNESS, FIBERGLASS REINFORCED, SPRING WIRE WRAPPED.
Tel-Flex Aero Hose - Lantana, FL

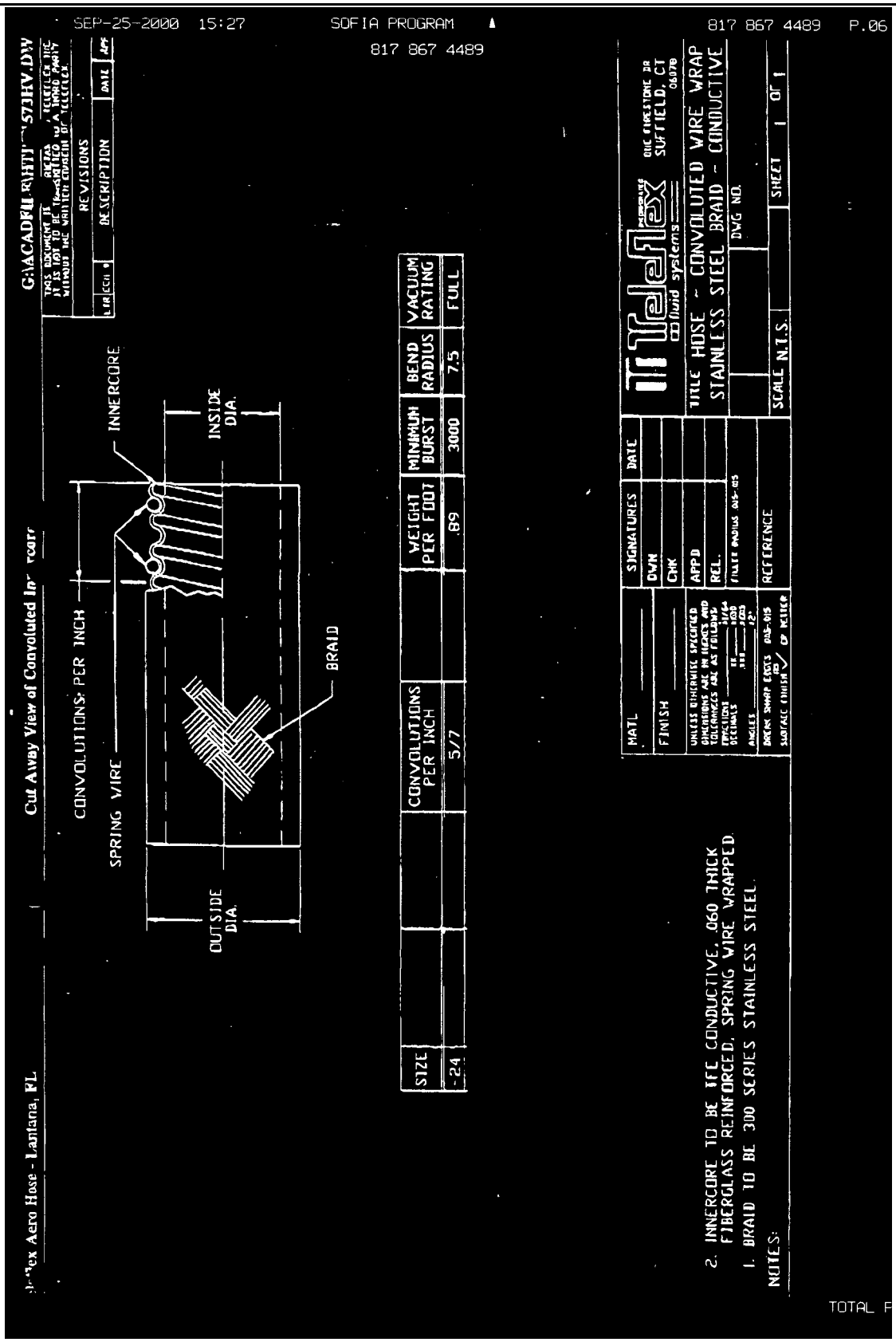
SEP-25-2000 15:27
SOFIA PROGRAM
817 867 4489
817 867 4489 P.06
Cut Away View of Convoluted Innercore
INNERCORE
INSIDE DIA.
CONVOLUTIONS PER INCH
SPRING WIRE
BRAID
OUTSIDE DIA.
SIZE
-24
CONVOLUTIONS PER INCH
5/7
WEIGHT PER FOOT
.89
MINIMUM BURST
3000
BEND RADIUS
7.5
VACUUM RATING
FULL
REVISIONS
DESCRIPTION
DATE
SIGNATURES
DWN
CHK
APPD
REL.
MATL
FINISH
REFERENCE
TITLE HOSE - CONVOLUTED WIRE WRAP
STAINLESS STEEL BRAID - CONDUCTIVE
DWG NO.
SCALE N.T.S.
SHEET 1 OF 1
2. INNERCORE TO BE UFC CONDUCTIVE, .060 THICK FIBERGLASS REINFORCED, SPRING WIRE WRAPPED.
1. BRAID TO BE 300 SERIES STAINLESS STEEL.
NOTES:
TOTAL P

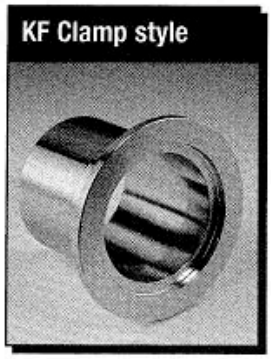

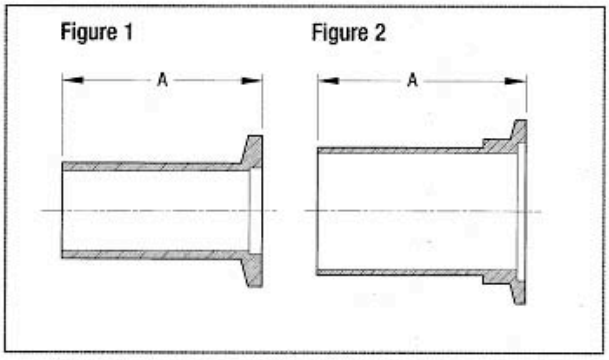

- NW16 through NW50 sizes
- Requires hinged clamp or bulkhead clamp - see individual flange size
- One-piece construction, except where noted

NOMINAL REF ISO	FLANGE O.D.	NOMINAL TUBE SIZE	FIGURE	TUBE O.D.	WALL THICKNESS	A	WT LB	REFERENCE	PART NUMBER	PRICE $
STAINLESS STEEL										
NW16	1.18	1/2	1	.50	.065	.50	1/4	K050-SWS	715100	8
NW16	1.18	1/2	1	.50	.065	1.58	1/4	K050-LWS	715105	12
NW16	1.18	3/4	1	.75	.065	.50	1/4	K075-SWS	715101	8
NW16	1.18	3/4	1	.75	.065	1.50	1/4	K075-1	720000	13
NW16	1.18	3/4	1	.75	.065	1.58	1/4	K075-LWS	715106	12
NW25	1.57	1	1	1.00	.065	.50	1/4	K100-SWS	715102	9
NW25	1.57	1	2	1.00	.065	1.58	1/4	K100-LWS	715107	14
NW25	1.57	1	2	1.00	.065	2.04	1/4	K100-1	720001	15
NW40	2.16	1	2	1.00	.065	2.04	1/4	K101-1	720002	12
NW40	2.16	1-1/2	1	1.50	.065	.75	1/4	K150-SWS	715103	16
NW40	2.16	1-1/2	2	1.50	.065	1.58	1/4	K150-LWS	715108	20
NW40	2.16	1-1/2	2	1.50	.065	2.46	1/4	K150-1	720003	17
NW50	2.95	2	1	2.00	.065	.75	1/4	K200-SWS	715104	18
NW50	2.95	2	1	2.00 [1]	.065	1.58	1/4	K200-LWS	715109	25
NW50	2.95	2	2	2.00 [1]	.065	3.21	1/4	K200-1	720004	25
ALUMINUM 6061-T6										
NW16	1.18	3/4	1	.75	.065	1.58	1/4	K075-LWSA	715110	12
NW25	1.57	1	2	1.00	.065	1.58	1/4	K100-LWSA	715111	15
NW40	2.16	1-1/2	2	1.50	.065	1.58	1/4	K150-LWSA	715112	17
NW50	2.95	2	2	2.00	.065	1.58	1/4	K200-LWSA	715113	20

[1] Welded

Exhaust Blower Hose Connectors (Part Number K150-LWS 715108)

Figure A 11

316 Stainless Steel Braided Open Pitch Convoluted Hose Chemfluor PTFE

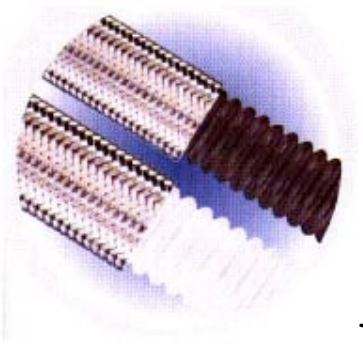

TWOB/TBOB Series Hose Specifications

'HV' Option for Vacuum Service* Fully Rated Vacuum Hose TWOBHV/TBOBHV

*HV versions are recommended for "full vacuum" applications and always for 2 1/2", 3" and 4" assemblies.

Description

TWOB (white inner core) and TBOB (anti-static black) innercore were designed to be the optimum in PTFE hose constructions. The tube is formed from a solid homogeneous PTFE extrusion, no tape lamination here! The internal convolutions are shaped to ensure pure flow, absolutely 100% totally cleanable. The Chemfluor PTFE is much thicker than most conventional hoses. This extra thickness gives TWOB and TBOB superior vacuum ratings and "hoop" strength, easy to flex yet won't flatten when bent and are extremely crush resistant. A primary advantage of a thick tube design is its ability to be extended through the fillings and flared over to form a sealing face. This eliminates any joint between fitting and hose. Flow is uninterrupted and the assembly is completely free of areas where corrosion or bacteria can start, pressure drop through the fitting is minimal, cleanliness is assured. Standard braid material is type 316 stainless steel. See page (p1) for Polypropylene and page (p2) for PVDF (Kynar) braid options.

Chemfluor PTFE Tube

- Unexcelled chemical resistance.
- Compatible with all materials.
- Rounded, open-pitch, helical convolution design.
- easy to clean: self cleaning.
- non-stick Chemfluor PTFE tube.
- can be cleaned with steam, caustics, solvents, or other cleaning agents.
- Assured sterility.

Temperature Rating

-73° C (-100° F) to +232° C (+450° F)

Vacuum Rating

See specification chart and vacuum rating note.

Fittings

"Flare-Thru"

- Integrally lined through the fittings in flanged, female cam and groove and sanitary clamp designs-1/2" mini-sanitary Flare-Thru also available. For availability consult us.

"Crimp Style"

- Over 36 styles of 316L SS conventional fitting designs can be mechanically attached 360 degree Radial (crimp).

Performance Ratings

TWOB

White tube: type 316 stainless steel braid reinforcement.

TBOB

Anti-static black co-extruded tube; type 316 stainless steel braid reinforcement.

"Anti-Static" Inner tube

These hoses are designed to safely convey electrically resistive fluids such as solvents, certain hydrocarbon based fuels, freon and even steam. Particularly in high flow rate applications these materials can electrically accumulate. Anti-static (conductive) tubes safely dissipate any charges to the nearest earth ground.

Specifications

Measured resistance does not exceed 10 (to the power of 6) Ohms in accordance with hose specification DIN 2823 American National Standards Institute (ANSI) C59.3-1968 ASTM D257-72; British standard BS2050: 1978. Anti-static Chemfluor PTFE tube is a co-extrusion design. A minute amount of carbon is added to the inner portion of the thick-wall construction. Chemfluor PTFE properties are completely maintained. The anti-static Chemfluor PTFE is processed to prevent chemical "leaching" or friction contamination by this conductive tube.

TWOB/TBOB hose specifications

Hose Size ID (in.)	Part Number	OD Size (in.)	Recom.'d Working Pressure (PSI)	Min Burst Pressure @ 70°F (PSI)	Min Bend Radius	Vacuum Rating	Approx. Weight
1/2	08	3/4	500	2000	2	29.9	0.20
3/4	12	1 1/8	425	1700	2 3/4	29.9	0.30
1	16	1 1/4	350	1400	4	29.9	0.40
1 1/4	20	1 5/8	337	1350	5 1/2	29.9	0.70
1 1/2	24	2	275	1100	7	29.9	0.75
2	32	2 1/2	250	1000	8 1/2	29.9	1.05
2 1/2	40	3 1/4	212	850	13	29.9	1.35
3	48	3 7/8	175	700	14	29.9	1.75
4	64	5	150	600	16	29.9	2.1

Data given is for hose only. End fitting vs. hose pressure limitations must be considered and the lower of the two ratings must be used on assemblies.
Working Pressure is given @ 70°F; Decrease working pressure 1% for every 2°F above 250°F.
Vacuum Rating is given @ 70°F @ 2x minimum bend radius; Decrease vacuum rating 1% for every 2°F above 250°F.
Vacuum rating factors: Vacuum rating decreases when installed less than 2 X min. bend radius.
11/4"=26" Hg; 1 1/2"=25" Hg; "2"-20" Hg; "21/2"=17" Hg; "3"=15" Hg; "4"=13" Hg
Extended Service Life Tip: Flexible Components suggests using full length "Anti-Kink" casing or at least 16" to 24" long "anti-kink cuffs (See "Options" Section, page 47) at each fitting end to help reduce the strain on the crimp collar & fitting in high load installations.
TWOBHV SERIES For Vacuum service conditions Flexible Components offers a "Heavy-duty Vacuum" option that allows full vacuum ratings for 1 1/2", 2" & 2 1/2" sizes up to 350°F. Vacuum ratings are decreased 1% for every 2°F above 350°F.
Vacuum ratings @ less than 2 X minimum bend radius: 3"HV= 20"Hg; 4"HV= 17"Hg

MS21924 REV C 47 ■ 9999912 0010375 2 ■

E-19-03

FED. SUP CLASS 4730

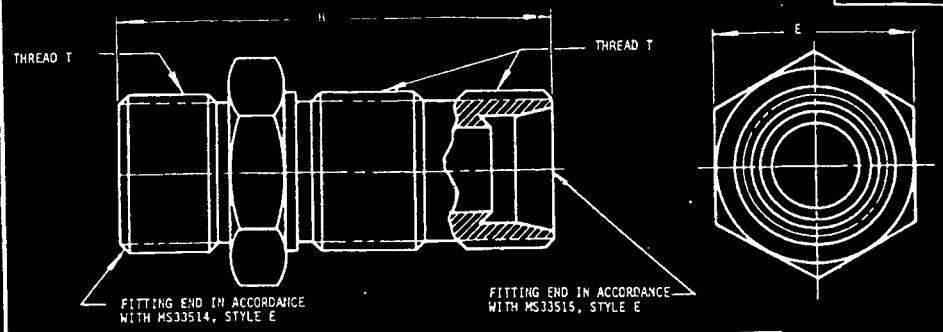

DASH NO.	TUBE OD	THREAD T MIL-S-8879	(a) E REF	H	WT LB MAX STEEL	AL ALLOY	TI ALLOY
-2	1/8	.3125-24 UNJF-3A	.563	1.484	.031	.011	.017
-3	3/16	.3750-24 UNJF-3A	.625	1.563	.048	.018	.027
-4	1/4	.4375-20 UNJF-3A	.688	1.656	.062	.023	.035
-5	5/16	.5000-20 UNJF-3A	.750	1.688	.078	.029	.045
-6	3/8	.5625-18 UNJF-3A	.813	1.797	.095	.035	.054
-8	1/2	.7500-16 UNJF-3A	1.000	2.031	.175	.064	.100
-10	5/8	.8750-14 UNJF-3A	1.125	2.250	.244	.090	.140
-12	3/4	1.0625-12 UNJ -3A	1.375	2.484	.361	.133	.208
-16	1	1.3125-12 UNJ -3A	1.625	2.469	.552	.202	.318
-20	1-1/4	1.6250-12 UNJ -3A	1.875		.678	.249	.391
-24	1-1/2	1.8750-12 UNJ -3A	2.125		.814	.295	.469
-32	2	2.5000-12 UNJ -3A	2.750	2.734			

(a) FOR HEX DIMENSIONS AND TOLERANCES, USE MS33515, STYLE E.

REQUIREMENTS:

1. MATERIAL: CARBON STEEL - BARS
ALUMINUM ALLOY - BARS
CORROSION RESISTANT STEEL - BARS
TITANIUM ALLOY - BARS
} SEE PROCUREMENT SPECIFICATION

2. FINISH:

NOTES:

1. BREAK ALL SHARP EDGES AND REMOVE ALL BURRS AND SLIVERS.

2. DIMENSIONS ARE IN INCHES. UNLESS OTHERWISE SPECIFIED, TOLERANCES: DECIMALS ±.016

3. PART NUMBER:
NO CODE LETTER IN PART NUMBER FOR CARBON STEEL.
ADD "D" IN PLACE OF DASH FOR ALUMINUM ALLOY (2024).
ADD "W" IN PLACE OF DASH FOR ALUMINUM ALLOY (7075).
ADD "J" IN PLACE OF DASH FOR CORROSION RESISTANT STEEL, TYPE 304.
ADD "K" IN PLACE OF DASH FOR CORROSION RESISTANT STEEL, TYPE 316.
ADD "T" AFTER DASH NUMBER FOR TITANIUM ALLOY (6AL-4V).
ADD "R" AFTER DASH NUMBER FOR CORROSION RESISTANT STEEL, TYPE 321.

EXAMPLES OF PART NUMBERS:
MS21924-4 - UNION, 1/4 TUBING, CARBON STEEL.
MS21924D4 - UNION, 1/4 TUBING, ALUMINUM ALLOY (2024).
MS21924W4 - UNION, 1/4 TUBING, ALUMINUM ALLOY (7075).
MS21924J4 - UNION, 1/4 TUBING, CORROSION RESISTANT STEEL, TYPE 304.
MS21924K4 - UNION, 1/4 TUBING, CORROSION RESISTANT STEEL, TYPE 316.
MS21924-4T - UNION, 1/4 TUBING, TITANIUM ALLOY (6AL-4V).
MS21924-4R - UNION, 1/4 TUBING, CORROSION RESISTANT STEEL, TYPE 321.

© ENTIRE STANDARD REVISED

APPROVED 2 MAY 53 REVISED (A) 27 JUNE 69 (B) 26 JUNE 1981 (C) 15 SEPT 88

USER SYMBOLS: USAF - 71, ARMY - GL, CR, ME, AT

REVIEWER SYMBOLS: USAF - 82, ARMY - AR, MI, DLA - CS

Review/user information is current as of the date of this document. For future coordination of changes to this document, draft circulation should be based on the information in the current DODISS.

AMSC N/A

DISTRIBUTION STATEMENT A: APPROVED FOR PUBLIC RELEASE; DISTRIBUTION IS UNLIMITED.
This military standard is approved for use by all Departments & Agencies of the Department of Defense. Selection for all new engineering and design applications and for repairs will be made from this document.

P.A. NAVY — AS Other Cust USAF - 99 ARMY - AV ©

TITLE: UNION, FLARELESS TUBE, BULKHEAD AND UNIVERSAL

MILITARY STANDARD

MS21924

SHEET 1 OF 2

PROCUREMENT SPECIFICATION MIL-F-18280

SUPERSEDES: MS21924 (ASG)

DD FORM 1 MAR 72 672-1 (Coordinated)

PREVIOUS EDITIONS OF THIS FORM ARE OBSOLETE.

PLATE NO. 22666

PROJECT NO. 4730-0977

Figure A 12

DEC 05 1994
6

THE REQUIREMENTS FOR ACQUIRING THE PRODUCT(S) DESCRIBED HEREIN SHALL CONSIST OF THIS SPECIFICATION SHEET AND THE ISSUE OF THE FOLLOWING SPECIFICATION LISTED IN THAT ISSUE OF THE DODISS SPECIFIED IN THE SOLICITATION: NONE

Form approved
OMB No. 0704-0188

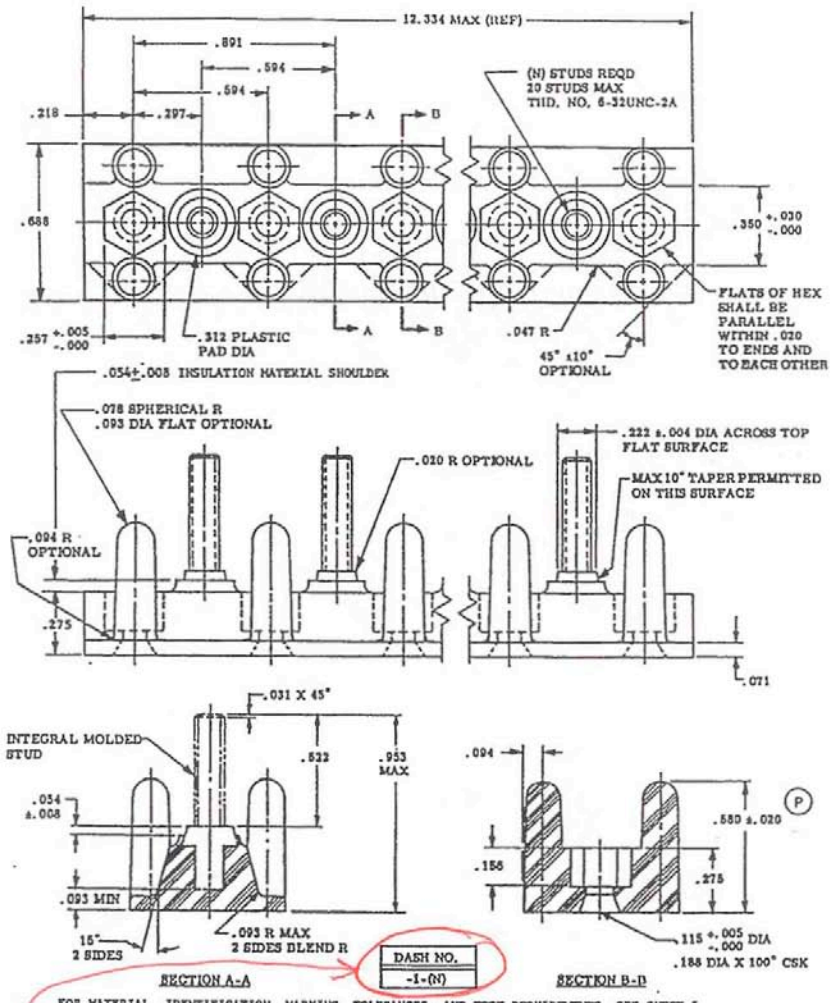

DASH NO.
-1-(N)

FOR MATERIAL, IDENTIFICATION, MARKING, TOLERANCES, AND TEST REQUIREMENTS, SEE SHEET 5.
THE GOVERNMENT SHALL PROCURE AND STOCK ONLY PART NO. MS27212-1-20.
(N) INDICATES THE NUMBER OF STUDS IN AN ASSEMBLY.
EXAMPLE OF PART NUMBER: MS27212-1-20-A TERMINAL BOARD ASSEMBLY HAVING 20 NO. 6-32 STUDS.

(P) DENOTES CHANGE

This is the item that is included in the package.

THIS SPECIFICATION IS APPROVED FOR USE BY ALL DEPARTMENTS AND AGENCIES OF THE DEPARTMENT OF DEFENSE.

PREPARING ACTIVITY: NAVY - AS CUSTODIANS: ARMY - ER NAVY - AS AIR FORCE - 85 DLA - GS REVIEW: USAF - 99 ARMY - MI NAVY - MC PROJECT NUMBER: 5940-1155	MILITARY SPECIFICATION SHEET TITLE TERMINAL BOARD ASSEMBLY, MOLDED-IN-STUD, ELECTRIC	SPECIFICATION SHEET NUMBER MS 27212 15 SEP 94 REV P SUPERSEDING MS 27212N 15 SEP 1989 AMSC- N/A FSC 5940
DISTRIBUTION STATEMENT A. Approved for public release; distribution is unlimited.		Page 1 of 6

DD FORM 672 MAY 1988 PREVIOUS EDITIONS OF THIS FORM ARE OBSOLETE

USA Information Systems, Inc.
(757)491-7525 / (800)872-8930
www.usainfo.com

Figure A 13

THE REQUIREMENTS FOR ACQUIRING THE PRODUCT(S) DESCRIBED HEREIN SHALL CONSIST OF THIS SPECIFICATION SHEET AND THE ISSUE OF THE FOLLOWING SPECIFICATION LISTED IN THAT ISSUE OF THE DODISS SPECIFIED IN THE SOLICITATION: NONE

Form approved
OMB No. 0704-0188

ADDITIONAL REQUIREMENTS:

1. MATERIAL: INSULATION MATERIAL, DIALLYLISOPHTHALATE GDI-30F, MIL-M-14, 155°±3°C TOTAL CONTINUOUS RATING.
   STUDS: CORROSION-RESISTANT STAINLESS STEEL IN ACCORDANCE WITH ONE OF THE FOLLOWING TYPES:
   a) MIL-S-7720, COMPOSITION 302, CONDITION A, PASSIVATED IN ACCORDANCE WITH QQ-P-35;
   b) ASTM-A582, TYPE 303, CONDITION A, CLEANED IN ACCORDANCE WITH MIL-S-5002, WITHOUT PASSIVATION;
   c) ASTM-A493, TYPE XM-7 (UNS DESIGNATION S30430), PASSIVATED IN ACCORDANCE WITH QQ-P-35;
   d) SAE-AMS5686, TYPE 305, PASSIVATED IN ACCORDANCE WITH QQ-P-35; OR
   e) SAE-AMS7472, TYPE 305 (MODIFIED), PASSIVATED IN ACCORDANCE WITH QQ-P-35.

2. IDENTIFICATION MARKING: EACH TERMINAL BOARD SHALL BE PERMANENTLY MARKED WITH THE MS NO. AND THE DASH NO. WITHOUT N. MARKING MAY BE INKED, HOT STAMPED, OR MOLDED. RAISED MARKINGS SHALL BE .003 INCH OR LESS IN HEIGHT.

3. DIMENSIONS ARE IN INCHES. UNLESS OTHERWISE SPECIFIED, TOLERANCES: DECIMALS ±.016, ANGLES ±2°.

4. THE CUMULATIVE TOLERANCE BETWEEN THE TWO END MOUNTING HOLES SHALL BE A MAXIMUM OF .003 INCH PER INCH OF LENGTH.

5. THREADS SHALL BE IN ACCORDANCE WITH SPECIFICATION MIL-S-7742. STUDS MAY HAVE A MAXIMUM OF TWO IMPERFECT THREADS AT THE WASHER FACE END.

6. INTEGRALLY MOLDED PARTS; PRIOR TO MOLDING, METAL PARTS SHALL BE THOROUGHLY CLEANED TO REMOVE METAL CHIPS AND DUST AND STUDS SHALL BE ROUNDED. METAL PARTS (STUDS, THREADED INSERTS, TERMINAL PLATES EXCEPT FEED-THROUGH TYPE WHICH IS AN ASSEMBLED PART, AND TERMINAL STRIPS) SHALL BE MOLDED INTEGRALLY WITH THE TERMINAL-BOARD BASE. FOLLOWING MOLDING, ALL MOLDING MATERIALS SHALL BE REMOVED FROM CONTACT SURFACES AND THREADED PORTIONS. STUD SHOULDERS SHALL BE SPOT FACED TO ASSURE CLEAN, FLAT CONTACT SURFACES. (P)

TEST REQUIREMENTS:

MINIMUM TORQUE VALUES: NO. 6 STUD, 22 POUND INCHES
NO. 8 STUD, 32 POUND INCHES
NO. 10 STUD, 40 POUND INCHES
1/4 STUD, 150 POUND INCHES
5/16 AND 3/8 STUDS, 170 POUND INCHES

THE MOLDED INTEGRAL STUD SHALL NOT BREAK, DISTORT OR PULL OUT OF THE TERMINAL BOARD BEFORE THE MINIMUM TORQUE VALUE IS REACHED.

POROSITY AND SURFACE DEFECTS: THE FINISHED TERMINAL BOARD SHALL COMPLY WITH THE GENERAL REQUIREMENTS OF MIL-M-14 PARAGRAPHS COVERING "SURFACE DEFECTS" AND "POROSITY".

DIELECTRIC STRENGTH TEST: THE TERMINAL BOARD SHALL BE CAPABLE OF WITHSTANDING 2500 VOLTS RMS FOR ONE MINUTE WHEN APPLIED BETWEEN ADJACENT STUDS AND BETWEEN STUD AND GROUND WITHOUT BREAKDOWN OR FLASHOVER.

THERMAL SHOCK: THE TERMINAL BOARDS SHALL BE SUBJECTED TO THE TORQUE TEST BEFORE THERMAL SHOCK. THE TERMINAL BOARDS SHALL THEN BE MOUNTED BY NORMAL MOUNTING MEANS TO A STEEL GROUND PLATE AND TESTED ACCORDING TO METHOD 107 OF MIL-STD-202, TEST CONDITION A, EXCEPT STEP 3 SHALL BE 180±3°C. EXAMINATIONS AFTER CYCLING - TERMINAL BOARDS SHALL SHOW NO EVIDENCE OF CRACKING, CRAZING, CHIPPING, STRETCHING, SHRINKAGE, FLOWING, WARPING, OTHER DISTORTION OF THE PLASTIC MATERIAL, LOOSENING, MOVEMENT, OR DISTORTION OF PARTS. THE TERMINAL BOARD SHALL THEN BE RETESTED FOR ABILITY TO MEET THE TORQUE REQUIREMENT. (P)

(P) NOTES:

1. FOR BUSSES TO CONNECT TERMINAL STUDS, USE MS25226.
2. FOR STRIPS TO INSULATE MOUNTING SCREWS, USE MS3373.
3. FOR COVER ASSEMBLIES, USE MS18029.
4. THE GOVERNMENT WILL ONLY PROCURE AND STOCK FULL LENGTH BOARDS. BOARDS REQUIRING A LESSER NUMBER OF STUDS THAN A MAXIMUM FULL LENGTH BOARD MAY BE MADE BY CUTTING THE FULL LENGTH BOARD INTO SMALLER LENGTHS. ALLOWANCE MUST BE MADE FOR THE LOSS OF ONE STUD FOR EACH CUT.
   EXAMPLE: ONLY 5 BOARDS OF 3 STUD LENGTH EACH CAN BE OBTAINED FROM A 20 STUD BOARD. CUTTING BOARDS TO THE DESIRED SIZE SHALL BE PERFORMED AT POINT OF INSTALLATION. THE INSTALLING ACTIVITY SHALL FURNISH FOR EACH TERMINAL STUD THE FOLLOWING RECOMMENDED HARDWARE:

PREPARING ACTIVITY: NAVY - AS CUSTODIANS: ARMY - ER NAVY - AS AIR FORCE - 85 DLA - GS REVIEW: USAF - 99 ARMY - MI NAVY - MC PROJECT NUMBER: 5940-1155	MILITARY SPECIFICATION SHEET TITLE TERMINAL BOARD ASSEMBLY, MOLDED-IN-STUD, ELECTRIC	SPECIFICATION SHEET NUMBER MS 27212 15 SEP 94 REV P SUPERSEDING MS 27212N 15 SEP 1989 AMSC- N/A FSC 5940

DISTRIBUTION STATEMENT A. Approved for public release; distribution is unlimited.

Page 5 of 6

DD FORM 672 MAY 1988 PREVIOUS EDITIONS OF THIS FORM ARE OBSOLETE

THIS SPECIFICATION IS APPROVED FOR USE BY ALL DEPARTMENTS AND AGENCIES OF THE DEPARTMENT OF DEFENSE.

THE REQUIREMENTS FOR ACQUIRING THE PRODUCT(S) DESCRIBED HEREIN SHALL CONSIST OF THIS SPECIFICATION SHEET AND THE ISSUE OF THE FOLLOWING SPECIFICATION LISTED IN THAT ISSUE OF THE DODISS SPECIFIED IN THE SOLICITATION: NONE

THIS SPECIFICATION IS APPROVED FOR USE BY THE NAVAL AIR SYSTEMS COMMAND, DEPARTMENT OF THE NAVY, AND IS AVAILABLE FOR USE BY ALL DEPARTMENTS AND AGENCIES OF THE DEPARTMENT OF DEFENSE.

Form approved
OMB No. 0704-0188

(P) TABLE I. ATTACHING HARDWARE.

DASH NO.	ATTACHING HARDWARE			
	FLAT WASHER	LOCKWASHER 1/	NUT	
			PLAIN (HEXAGON)	OR SELF-LOCKING
-1-(N)	AN960-C6	MS35338-136 OR -155	MS35649-264	MS21042-06 OR MS21042L06
-2-(N)	AN960-C10	MS35338-138 OR -157	MS35650-304	MS21042-3 OR MS21042L3
-3-(N)2/	AN960-C416	MS35338-139 OR -158	MS35650-3254	MS21042-4 OR MS21042L4
-4-(N)2/	AN960-C516	MS35338-140 OR -159	MS35650-3314	MS21042-5 OR MS21042L5
-5-(N)2/	AN960-C616	MS35338-141 OR -160	MS35650-3384	MS21042-6 OR MS21042L6
-6-(N)	AN960-C8	MS35338-137 OR -156	MS35649-284	MS21042-08 OR MS21042L08

1/ LOCKWASHER IS NOT REQUIRED WHEN SELF-LOCKING TYPE NUT IS USED.
2/ TERMINAL LUGS SPECIFIED ON MS25036 AS DASH NUMBERS 135 THROUGH 141 ARE NOT TO BE ATTACHED TO THESE ASSEMBLIES.

FOR DESIGN FEATURE PURPOSES, THIS STANDARD TAKES PRECEDENCE OVER PROCUREMENT DOCUMENTS REFERENCED HEREIN. REFERENCED DOCUMENTS SHALL BE OF THE ISSUE IN EFFECT ON DATE OF INVITATIONS FOR BID.

(P) Table II. METRIC CONVERSION.

INCH	MM	INCH	MM	INCH	MM	INCH	MM
.004	.102	.141	3.581	.430	10.922	.891	22.631
.005	.127	.150	3.810	.437	11.099	.906	23.012
.008	.203	.156	3.962	.455	11.557	.938	23.825
.020	.508	.188	4.775	.522	13.259	.953	24.206
.025	.635	.210	5.334	.548	13.919	1.000	25.400
.030	.762	.218	5.537	.565	14.351	1.005	25.527
.031	.787	.222	5.639	.568	14.427	1.079	27.406
.040	1.016	.250	6.350	.580	14.732	1.125	28.575
.047	1.194	.257	6.528	.594	15.088	1.250	31.750
.050	1.270	.275	6.985	.595	15.113	1.297	32.944
.054	1.372	.281	7.137	.625	15.875	1.321	33.553
.071	1.803	.297	7.544	.688	17.475	1.392	35.357
.078	1.981	.312	7.925	.710	18.034	1.500	38.100
.093	2.362	.315	8.001	.750	19.050	1.517	38.532
.094	2.388	.328	8.331	.781	19.837	2.250	57.150
.115	2.921	.350	8.890	.789	20.041	12.334	313.284
.125	3.175	.375	9.525	.875	22.225	12.454	316.332
.130	3.302	.388	8.585	-	-	-	-

PREPARING ACTIVITY: NAVY-AS CUSTODIANS ARMY-ER NAVY-AS AIR FORCE-85 DLA-GS REVIEW: USAF-99 ARMY-MI USER: NAVY-MC PROJECT NUMBER: 5940-1155	MILITARY SPECIFICATION SHEET TITLE TERMINAL BOARD ASSEMBLY, MOLDED-IN-STUD, ELECTRIC	SPECIFICATION SHEET NUMBER MS 27212 15 SEP 94 REV P SUPERSEDING MS 27212N 15 SEP 1989 AMSC- N/A FSC 5940
DISTRIBUTION STATEMENT A. Approved for public release; distribution is unlimited.		Page 6 of 6

DD FORM 672 MAY 1988 PREVIOUS EDITIONS OF THIS FORM ARE OBSOLETE